SUZUKI

GSX-S1000
A/F/FA

SERVICE MANUAL

99500-39410-03E

TABLE OF CONTENTS

Precautions 00-i
Precautions 00-1

General Information 0-i
General Information 0A-1
Maintenance and Lubrication 0B-1
Service Data 0C-1

Engine 1-i
Precautions 1-1
Engine General Information and Diagnosis 1A-1
Emission Control Devices 1B-1
Engine Electrical Devices 1C-1
Engine Mechanical 1D-1
Engine Lubrication System 1E-1
Engine Cooling System 1F-1
Fuel System 1G-1
Ignition System 1H-1
Starting System 1I-1
Charging System 1J-1
Exhaust System 1K-1

Suspension 2-i
Precautions 2-1
Suspension General Diagnosis 2A-1
Front Suspension 2B-1
Rear Suspension 2C-1
Wheels and Tires 2D-1

Driveline / Axle 3-i
Precautions 3-1
Drive Chain / Drive Train / Drive Shaft 3A-1

Brakes 4-i
Precautions 4-1
Brake Control System and Diagnosis 4A-1
Front Brakes 4B-1
Rear Brakes 4C-1

Transmission / Transaxle 5-i
Precautions 5-1
Manual Transmission 5B-1
Clutch 5C-1

Steering 6-i
Precautions 6-1
Steering General Diagnosis 6A-1
Steering / Handlebar 6B-1

Body and Accessories 9-i
Precautions 9-1
Wiring Systems 9A-1
Lighting Systems 9B-1
Combination Meter / Fuel Meter / Horn 9C-1
Exterior Parts 9D-1
Body Structure 9E-1

FOREWORD

This manual contains introductory descriptions of SUZUKI motorcycle/ATV, inspection/service procedures and procedures for overhaul of main components.
This manual should be referred at any time during the service work.
Strict observance of the specified items will enable users to obtain the full performance of the motorcycle/ATV.
When replacing parts or servicing by disassembly, it is recommended to use SUZUKI genuine parts, tools and service materials as specified in each description.
The information which seems to be generally known is omitted from it.
See GENERAL INFORMATION section to familiarize yourself with the motorcycle/ATV and its maintenance, and see other sections as a guide for proper inspections and services.
This manual will help to improve your understanding of the motorcycle/ATV so that you can assure your customers of quick and reliable services.

- **All information, illustrations, instructions and specifications in this manual are based on the latest product information available at the time of publication approval. Therefore, note that information, illustrations, instructions or specifications may differ from the motorcycle / ATV being actually serviced.**
  SUZUKI MOTOR CORPORATION reserves the right to make changes at any time without notice and without incurring any obligation whatsoever.
- **Illustrations in this manual may not represent actual products exactly in detail, because they are simplified to show the basic principles of operation or work procedures.**
- **This manual is written for persons who have enough knowledge, enough skills and required tools including special tools for servicing SUZUKI motorcycles or ATVs.**
  If you do not have the proper knowledge, skills, tools or equipment, ask your authorized SUZUKI motorcycle / ATV dealer.
  This will help you to perform the services safely and properly.

⚠WARNING:
Inexperienced mechanics or mechanics without proper tools and equipment may not be able to properly perform the services described in this manual.
Improper repair may result in injury to the mechanic and may render the rider and passenger unsafe.

SUZUKI MOTOR CORPORATION

© COPYRIGHT 2018 SUZUKI MOTOR CORPORATION All rights reserved.
No part of this document may be reproduced or transmitted in any form or by any means, electronic or mechanical, for any purpose, without the express written permission of Suzuki Motor Corporation.

IMPORTANT NOTICE

WARNING/CAUTION/NOTICE/NOTE

Please read this manual and follow its instructions carefully. To emphasize special information, the words, WARNING, CAUTION, NOTICE and NOTE have special meanings. Pay special attention to the messages highlighted by these signal words.

⚠WARNING:
Indicates a potential hazard that could result in death or serious injury.

⚠CAUTION:
Indicates a potential hazard that could result in minor or moderate injury.

NOTICE:
Indicates a potential hazard that could result in motorcycle or equipment damage.

NOTE:
Indicates special information to make maintenance easier or instructions clearer.

Please note, however, that the warnings and cautions contained in this manual cannot possibly cover all potential hazards relating to the servicing, or lack of servicing, of the motorcycle. In addition to the WARNINGS, CAUTIONS and NOTICES stated, you must use good judgement and basic mechanical safety principles. If you are unsure about how to perform a particular service operation, ask a more experienced mechanic for advice.

Applicable Model / VIN

Applicable model:

GSX-S1000/A/F/FA (GSX-S1000AL/GSX-S1000AUFL/GSX-S1000FAL/GSX-S1000FAUFL/GSX-S1000FL/GSX-S1000FUFL/GSX-S1000L/GSX-S1000UFL)

Applicable VIN:

NOTE:
"#" represents any number from 0 to 9.

GSX-S1000AL	JS1DG112200100001 ~
	JS1DG1122G0100001 ~
	JS1GT7AA#G2100001 ~
GSX-S1000AUFL	JS1DG2122G0100001 ~
GSX-S1000FAL	JS1DG114400100001 ~
	JS1DG1144G0100001 ~
	JS1GT7CA#G2100001 ~
GSX-S1000FAUFL	JS1DG2144G0100001 ~
GSX-S1000FL	JS1DG1133G0100001 ~
	JS1GT7BA#G2100001 ~
GSX-S1000FUFL	JS1DG2133G0100001 ~
GSX-S1000L	JS1DG1111G0100001 ~
	JS1GT79A#G2100001 ~
GSX-S1000UFL	JS1DG2111G0100001 ~

Table of Contents

Section Title	No.
Precautions	**00**
Precautions	00
General Information	**0**
General Information	0A
Maintenance and Lubrication	0B
Service Data	0C
Engine	**1**
Precautions	1
Engine General Information and Diagnosis	1A
Emission Control Devices	1B
Engine Electrical Devices	1C
Engine Mechanical	1D
Engine Lubrication System	1E
Engine Cooling System	1F
Fuel System	1G
Ignition System	1H
Starting System	1I
Charging System	1J
Exhaust System	1K
Suspension	**2**
Precautions	2
Suspension General Diagnosis	2A
Front Suspension	2B
Rear Suspension	2C
Wheels and Tires	2D

Section Title	No.
Driveline / Axle	**3**
Precautions	3
Drive Chain / Drive Train / Drive Shaft	3A
Brakes	**4**
Precautions	4
Brake Control System and Diagnosis	4A
Front Brakes	4B
Rear Brakes	4C
ABS	4E
Transmission / Transaxle	**5**
Precautions	5
Manual Transmission	5B
Clutch	5C
Steering	**6**
Precautions	6
Steering General Diagnosis	6A
Steering / Handlebar	6B
Body and Accessories	**9**
Precautions	9
Wiring Systems	9A
Lighting Systems	9B
Combination Meter / Fuel Meter / Horn	9C
Exterior Parts	9D
Body Structure	9E

General Precautions

⚠WARNING:

- **Proper service and repair procedures are important for the safety of the service mechanic and the safety and reliability of the motorcycle.**
- **When 2 or more persons work together, pay attention to the safety of each other.**
- **When it is necessary to run the engine indoors, make sure that exhaust gas is forced outdoors.**
- **When working with toxic or flammable materials, make sure that the area you work in is well ventilated and that you follow all of the material manufacturer's instructions.**
- **To avoid getting burned, do not touch the engine, engine oil and exhaust system until they have cooled.**

NOTICE:

- **Never use gasoline as a cleaning solvent.**
- **After servicing the fuel, oil, exhaust or brake systems, check all lines and fittings related to the system for leaks.**
- **If parts replacement is necessary, replace the parts with Suzuki Genuine Parts or their equivalent.**
- **When removing parts that are to be reused, keep them arranged in an orderly manner so that they may be reinstalled in the proper order and orientation.**
- **Be sure to use special tools when instructed.**
- **Make sure that all parts used in reassembly are clean. Lubricate them when specified.**
- **Use the specified lubricant, bond, or sealant.**
- **When removing the battery, disconnect the negative (–) cable first and then the positive (+) cable.**
- **When reconnecting the battery, connect the positive (+) cable first and then the negative (–) cable, and replace the terminal cover on the positive (+) terminal.**
- **When performing service to electrical parts, if the service procedures do not require use of battery power, disconnect the negative (–) cable from the battery.**
- **When tightening the cylinder head or case bolts and nuts, tighten the larger sizes first. Always tighten the bolts and nuts diagonally from the inside toward outside and to the specified tightening torque.**
- **Whenever you remove oil seals, gaskets, packing, O-rings, locking washers, selflocking nuts, cotter pins, circlips and certain other parts as specified, be sure to replace them with new ones. Also, before installing these new parts, be sure to remove any left over material from the mating surfaces.**
- **Never reuse a circlip. When installing a new circlip, take care not to expand the end gap larger than required to slip the circlip over the shaft. After installing a circlip, always ensure that it is completely seated in its groove and securely fitted.**
- **Use a torque wrench to tighten fasteners to the specified torque. Wipe off grease and oil if a thread is smeared with them.**
- **After reassembling, check parts for tightness and proper operation.**
- **To protect the environment, do not unlawfully dispose of used motor oil and other fluids: batteries, and tires.**
- **To protect Earth's natural resources, properly dispose of used motorcycle and parts.**

Precautions for Circuit Tester

- Use the Suzuki multi circuit tester set.

  Special Tool
  (A): 09900–25008

- The following items are included in the special tool.
  — Multi circuit tester body
  — Tachometer sensor
  — Test leads
  — Peak volt adapter
  — Case
  — Instruction Manual
- Read the instruction manual to use the tester correctly.
- Be sure to set the tester to the correct testing range.
- If the voltage and current are not known, make measurements using the highest range.

Symbols

Symbol	Definition
	DC
	AC
Ω	Resistance
	Continuity
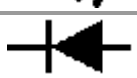	Diode

Functions

	Function switch	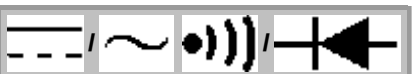 key switch (6)
Voltage measurement	(1)	Select  or .
Current measurement	(2) or (3), whichever appropriate.	Select  or .
Resistance measurement	(4)	—
Continuity test	(5)	Select .
Diode test	(5)	Select 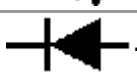.

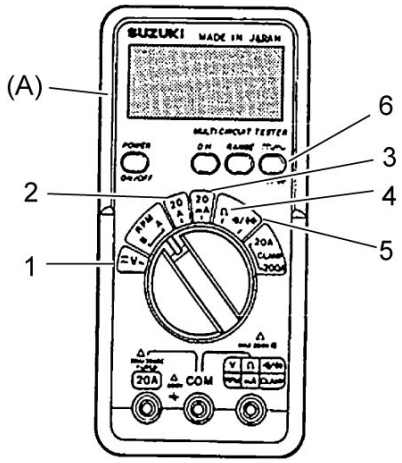

Using Needle Pointed Prove

NOTICE:

- **When using the multi circuit tester, do not strongly touch the terminal of the ECM couplers with a needle pointed tester probe to prevent the terminal damage or terminal bend.**
- **When connecting the multi circuit tester, use the needle pointed probe to the back side of the lead wire coupler and connect the probes of tester to them.**
- **Use the needle pointed probe to prevent the rubber of the water proof coupler from damage.**

Special Tool

09900–25009

Precautions for Electrical Circuit Service

When handling the electrical parts or servicing the electric system, observe the following points for the safety of the system.

Electrical Parts

Connector / Coupler

- Faulty electrical system is often related to poor electrical contact of connector/coupler. Before servicing individual electronic part, check electrical contact of the connector/coupler.
- When connecting a connector, be sure to push it in until a click is felt.

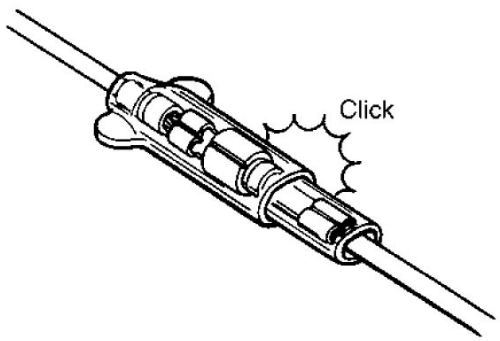

- With a lock type coupler, be sure to release the lock when disconnecting, and push it in fully to engage the lock when connecting.
- When disconnecting the coupler, be sure to hold the coupler body and do not pull the lead wires.
- Inspect each terminal on the connector/coupler for looseness or bending.
- Push in the coupler straightly. An angled or skewed insertion may cause the terminal to be deformed, possibly resulting in poor electrical contact.
- Inspect each terminal for corrosion and contamination. The terminals must be clean and free of any foreign material which could impede proper terminal contact.
- Before refitting the sealed coupler, make sure its seal rubber is positioned properly. The seal rubber may possibly come off the position during disconnecting work and if the coupler is refitted with the seal rubber improperly positioned, it may result in poor water sealing.

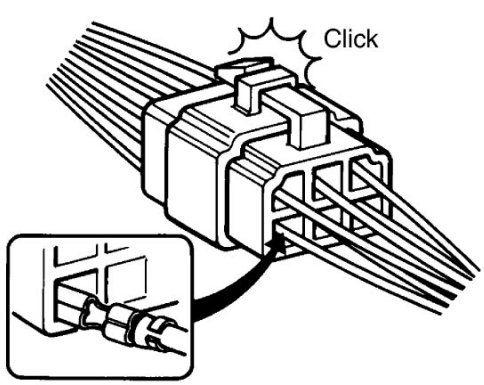

- Inspect each lead wire circuit for poor connection by shaking it by hand lightly. If any abnormal condition is found, repair or replace.

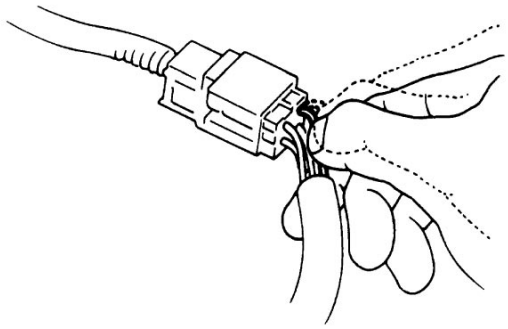

- When taking measurements at electrical coupler (1) using a tester probe (2), be sure to insert the probe from the wire harness side (rear) of the coupler.

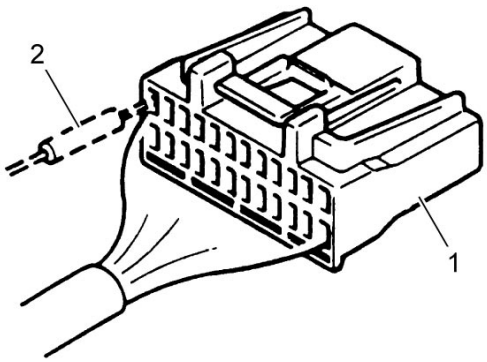

- When connecting meter probe (2) from the terminal side of the coupler (1) because it cannot be connected from harness side, use extra care not to bend the male terminal of coupler of force its female terminal open for connection.
  In case of such coupler as shown connect probe as shown to avoid opening female terminal.
  Never connect probe where male terminal is supposed to fit.

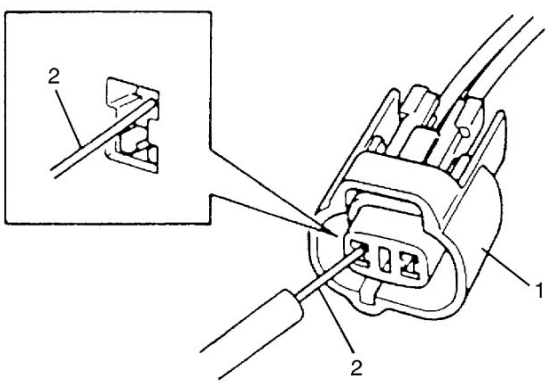

- Avoid applying grease or other similar material to connector/coupler terminals to prevent electric trouble.

Clamp

- Clamp the wire harness at such positions as indicated in ***Wiring Harness Routing Diagram***.
- Bend the clamp properly so that the wire harness is clamped securely.
- In clamping the wire harness, use care not to allow it to hang down.
- Do not use wire or any other substitute for the band type clamp.

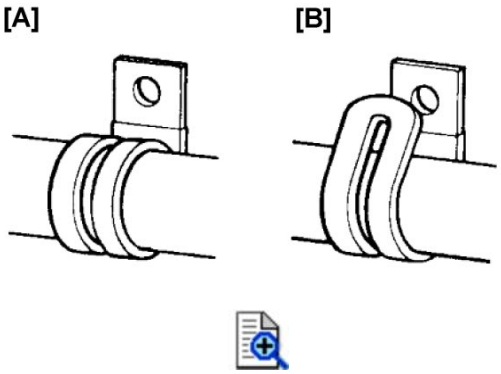

[A]:	Correct clamping	[B]:	Incorrect clamping

Fuse

- When a fuse is blown, always investigate the cause to correct it and then replace the fuse.
- Do not use a fuse of different capacity.
- Do not use wire or any other substitute for the fuse.

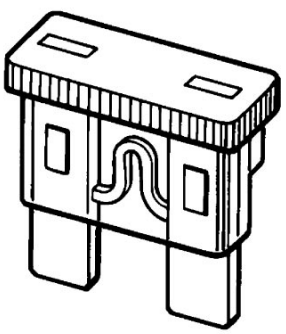

Switch

Never apply grease material to switch contact points to prevent damage.

ECM / CDI UNIT / ABS control unit/HU / Various sensors

- Since each component is a high-precision part, great care should be taken not to apply any severe impacts during removal and installation.

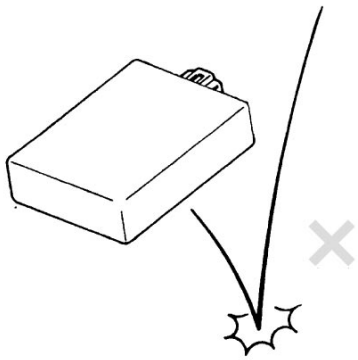

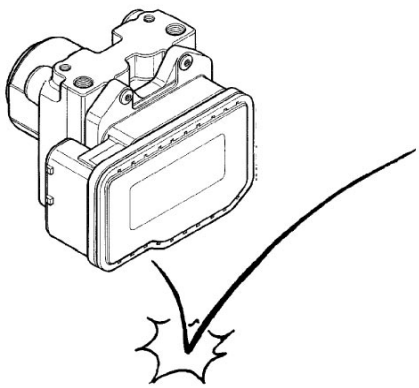

- Be careful not to touch the electrical terminals of the electronic parts (ECM / CDI UNIT, etc.). The static electricity from your body may damage them.

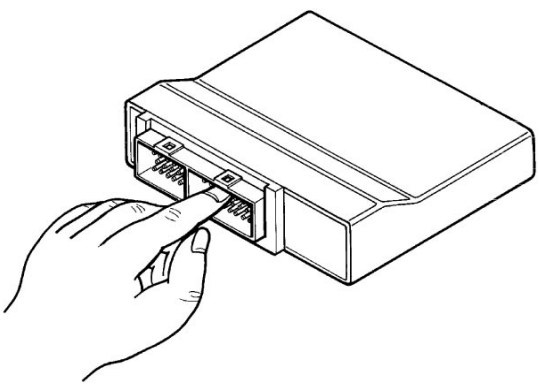

- When disconnecting and connecting the coupler, make sure to turn OFF the ignition switch (1), or electronic parts may get damaged.

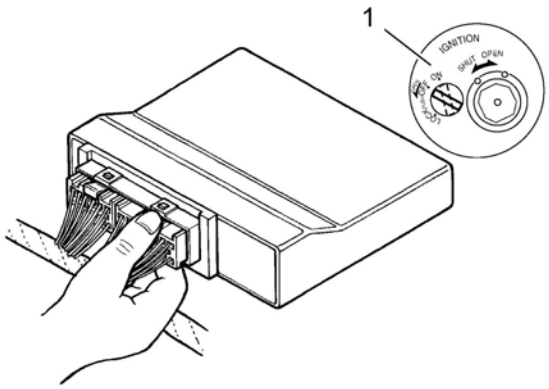

- Never allow dust or water to contact the ABS control unit/HU.

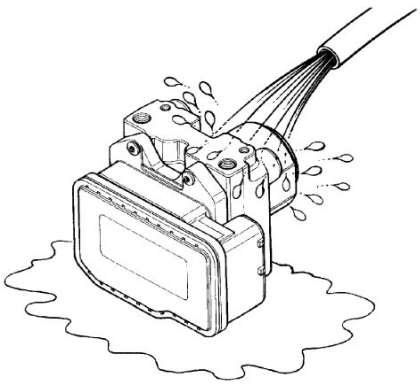

- The ABS control unit/HU cannot be disassembled.
  Replace the whole unit with a new one.

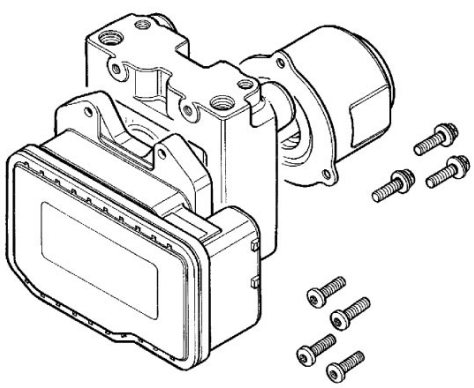

- Never connect any tester (voltmeter, ohmmeter, or whatever) to the electronic unit when its coupler is disconnected. Otherwise, damage to electronic unit may result.
- Never connect an ohmmeter to the electronic unit with its coupler connected. If attempted, damage to ECM / CDI UNIT / ABS control unit/HU or sensor may result.

- Be sure to use a specified voltmeter/ohmmeter. Otherwise, accurate measurements may not be obtained and personal injury may result.

Battery

- Select the same type MF battery when replacing the battery.
- Battery connection in reverse polarity is strictly prohibited. Such a wrong connection will damage the components of the FI system and ABS instantly when reverse power is applied.

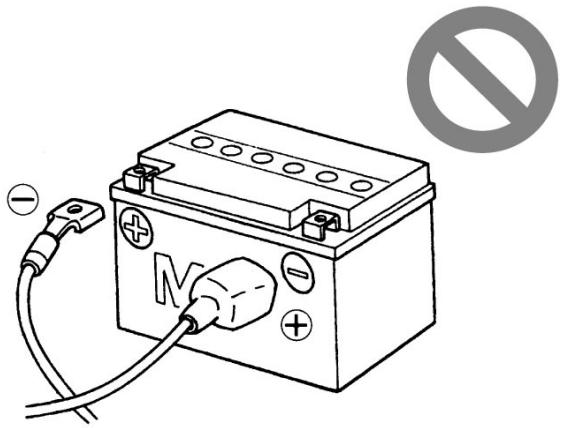

- Removing any battery terminal of a running engine is strictly prohibited. The moment such removal is made, damaging counter electromotive force will be applied to the electronic unit which may result in serious damage.

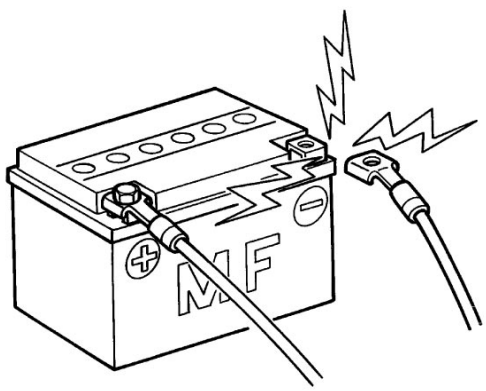

- Before measuring voltage at each terminal, check to make sure that battery voltage is 11 V or higher. Terminal voltage check with a low battery voltage will lead to erroneous diagnosis.

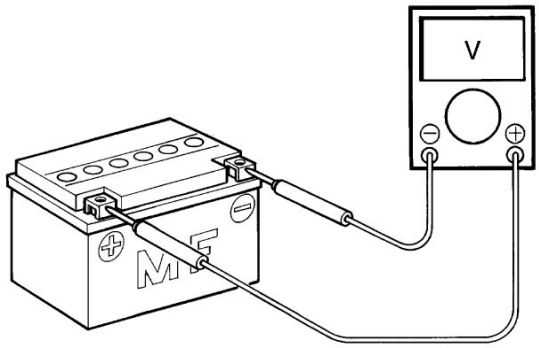

Electrical Circuit Inspection Procedure

While there are various methods for electrical circuit inspection, described here is a general method to check for open and short circuit using an ohmmeter and a voltmeter.

Open circuit check

Possible causes for the open circuit are as follows. As the cause can exist in the connector/coupler or terminal, they need to be checked carefully.

- Loose connection of connector/coupler
- Poor contact of terminal (due to dirt, corrosion or rust, poor contact tension, entry of foreign object etc.)
- Wire harness being open.
- Poor terminal-to-wire connection.

When checking system circuits including an electronic control unit such as ECM, etc., it is important to perform careful check, starting with items which are easier to check.

1) Disconnect the negative (–) cable from the battery.

2) Check each connector/coupler at both ends of the circuit being checked for loose connection. Also check for condition of the coupler lock if equipped.

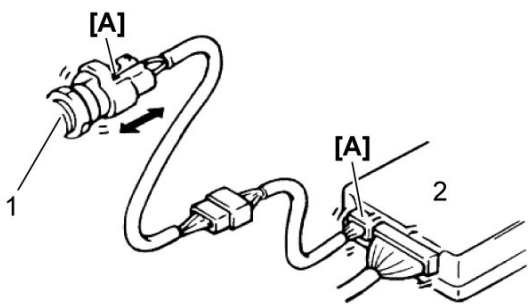

[A]:	Check for loose connection	1.	Sensor	2.	ECM

3) Using a test male terminal, check the female terminals of the circuit being checked for contact tension.
Check each terminal visually for poor contact (possibly caused by dirt, corrosion, rust, entry of foreign object, etc.). At the same time, check to make sure that each terminal is fully inserted in the coupler and locked.

If contact tension is not enough, rectify the contact to increase tension or replace. The terminals must be clean and free of any foreign material which could impede proper terminal contact.

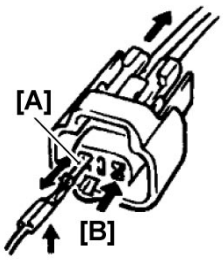

[A]:	Check contact tension by inserting and removing.
[B]:	Check each terminal for bend and proper alignment.

4) Using continuity inspect or voltage check procedure as described below, inspect the wire harness terminals for open circuit and poor connection.
Locate abnormality, if any.

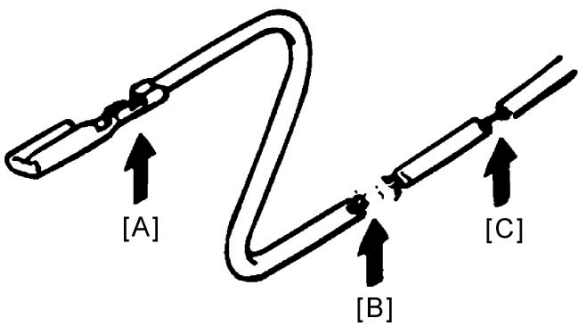

[A]:	Looseness of crimping
[B]:	Open
[C]:	Thin wire (A few strands left)

Continuity check

1) Measure resistance across coupler [B] (between [A] and [C] in the figure).
If no continuity is indicated (infinity or over limit), the circuit is open between terminals [A] and [C].

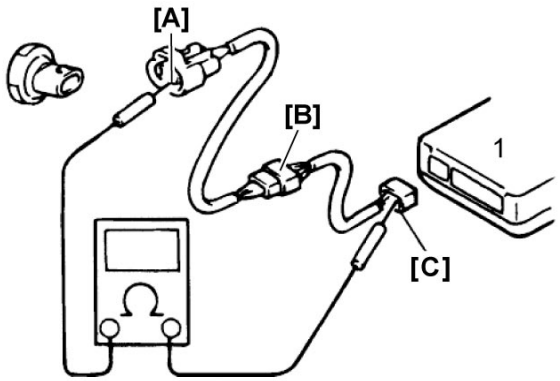

1.	ECM

2) Disconnect the coupler [B] and measure resistance between couplers [A] and [B-1].
If no continuity is indicated, the circuit is open between couplers [A] and [B-1]. If continuity is indicated, there is an open circuit between couplers [B-2] and [C] or an abnormality in coupler [B-2] or coupler [C].

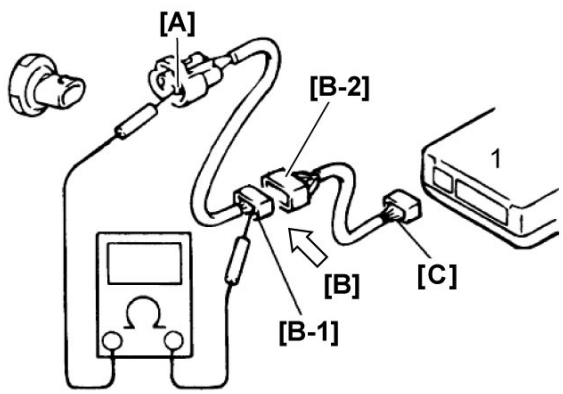

1.	ECM

Voltage check

If voltage is supplied to the circuit being checked, voltage check can be used as circuit check.

1) With all connectors/couplers connected and voltage applied to the circuit being checked, measure voltage between each terminal and body ground.

2) If measurements were taken as shown in the figure and results were listed in the following, it means that the circuit is open between terminals [A] and [B].

Voltage between

[A] and body ground: 0 V
[B] and body ground: Approx. 5 V
[C] and body ground: Approx. 5 V

3) Also, if measured values are as listed following, a resistance (abnormality) exists which causes the voltage drop in the circuit between terminals [A] and [B].

Voltage between

[A] and body ground: 3 V – 2 V voltage drop
[B] and body ground: Approx. 5 V
[C] and body ground: Approx. 5 V

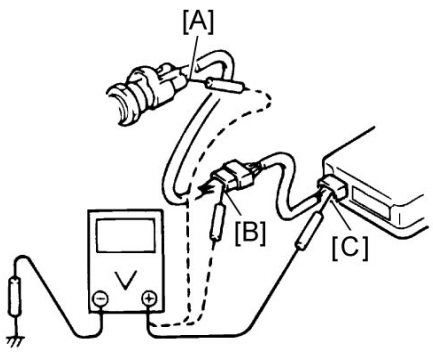

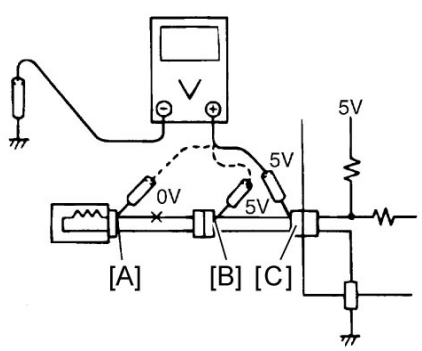

Short circuit check (Wire harness to ground)

1) Disconnect the negative (–) cable from the battery.

2) Disconnect the connectors/couplers at both ends of the circuit to be checked.

> **NOTE:**
> **If the circuit to be checked branches to other parts as shown, disconnect all connectors / couplers of those parts. Otherwise, diagnosis will be wrong.**

3) Measure resistance between terminal at one end of circuit ([A] terminal in the figure) and body ground. If continuity is indicated, there is a short circuit to ground between terminals [A] and [C].

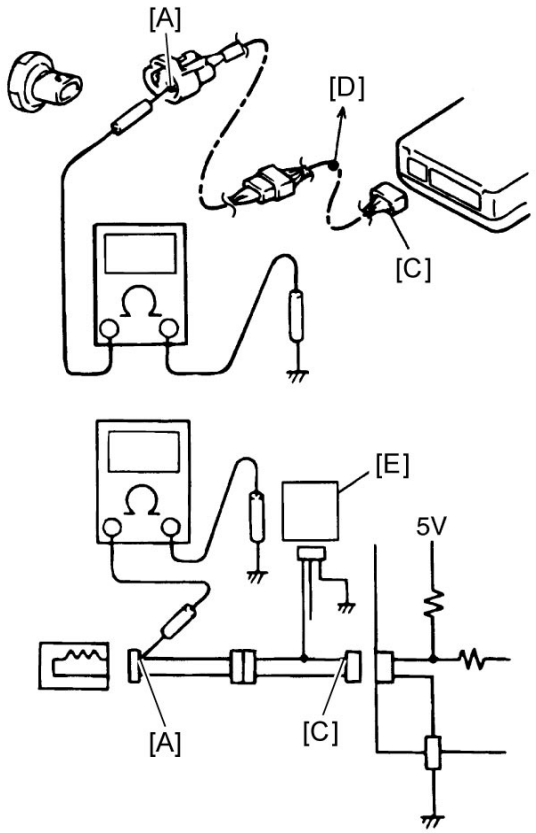

[D]:	To other parts	[E]:	Other parts

4) Disconnect the connector/coupler included in circuit (coupler [B]) and measure resistance between terminal [A] and body ground. If continuity is indicated, the circuit is shorted to the ground between terminals [A] and [B].

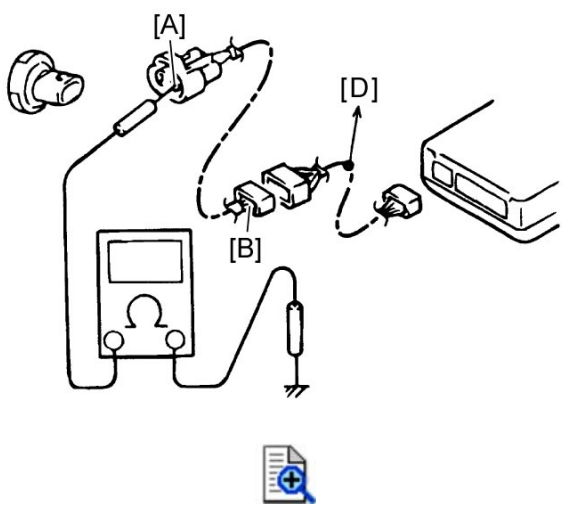

[D]:	To other parts

Country and Area Codes

The following codes stand for the applicable country(-ies) and area(-s).

Code	Country or Area
E03	U.S.A. except for California State
E08	Malaysia
E12	Indonesia
E14	Thailand
E21	E.U.
E24	Australia
E28	Canada
E33	California State
E38	Taiwan
E43	Middle East
E50	China
E51	Korea
E73	Vietnam

Abbreviations



A

AAT	Ambient Air Temperature
ABDC	After Bottom Dead Center
ABS	Anti-lock Brake System
AC	Alternating Current
ACL	Air Cleaner
AKI	Anti-knock index
AP	Atmospheric Pressure
API	American Petroleum Institute
ATDC	After Top Dead Center
A/F	Air Fuel Ratio

B

BBDC	Before Bottom Dead Center
BTDC	Before Top Dead Center
B+	Battery Positive Voltage

C

CDI	Capacitive Discharge Ignition
CKP	Crankshaft Position
CKT	Circuit
CLP	Clutch Lever Position
CMP	Camshaft Position
CO	Carbon Monoxide
CPU	Central Processing Unit
CVT	Continuously Variable Transmission

D

DC	Direct Current
DOHC	Double Over Head Camshaft
DRL	Daytime Running Light
DTC	Diagnostic Trouble code

E

ECM	Engine Control Module
ECT	Engine Coolant Temperature
ET	Engine Temperature
EVAP	Evaporative Emission
EX.	Exhaust
EXCV	Exhaust control valve

EXCVA Exhaust control valve actuator

F

FI Fuel Injection, Fuel Injector

FP Fuel pump

FPR Fuel Pressure Regulator

FTPC Fuel Tank Pressure Control

FWD Forward

G

GEN Generator

GND Ground

GP Gear Position

H

HC Hydrocarbons

HI High

HO2 Heated Oxygen

HU Hydraulic Unit

I

IAP Intake Air Pressure

IAT Intake Air Temperature

I.D. Inside Diameter

IG Ignition

IN. Intake

ISC Idle Speed Control

J

JASO Japanese Automobile Standards Organization

L

LCD Liquid Crystal Display

LED Light Emitting Diode

LH Left Hand

LO Low

M

Max Maximum

MIL Malfunction Indicator Lamp

Min. Minimum

MTBE Methyl Tertiary Butyl Ether

N

NOx Nitrogen Oxides

O

O2 Oxygen

OHC Over Head Camshaft

O.D. Outside Diameter

P

PAIR Pulsed Secondary Air Injection

PCV Positive Crankcase Ventilation

PP Pulley Position

R

RH Right Hand

ROM Read Only Memory

RON Research Octane Number

RPM Engine Speed

S

SAE Society of Automotive Engineers

SDS Suzuki Diagnosis System

SRAD Suzuki Ram Air Direct

STCS Secondary Throttle Control System

STD Standard

STP Secondary Throttle Position

STV Secondary Throttle Valve

STVA Secondary Throttle Valve Actuator

T

TC Traction Control

TDC Top Dead Center

TO Tip-over

TP Throttle Position

TPS Throttle Position Sensor

Symbols

Listed in the table below are the symbols indicating instructions and other information necessary for servicing. The meaning of each symbol is also included in the table.

NOTE:
The table below shows generally used symbols, and includes some symbols not used in this manual.

Symbol	Definition
	Torque control required. Data beside it indicate specified torque.
	Apply oil. Use engine oil unless otherwise specified.
	Apply molybdenum oil solution. (Mixture of engine oil and SUZUKI MOLY PASTE in a ratio of 1 : 1).
	Apply SUZUKI SUPER GREASE A. 99000-25011
	Apply SUZUKI SUPER GREASE C. 99000-25030
	Apply SUZUKI MOLYBDENUM GREASE L. 99000-25280
	Apply SUZUKI MOLY PASTE. 99000-25140
	Apply SUZUKI SILICONE GREASE. 99000-25100
	Apply SUZUKI WATER RESISTANT GREASE EP2. 99000-25350
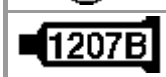	Apply SUZUKI BOND 1207B. 99000-31140
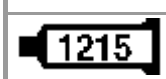	Apply SUZUKI BOND 1215. 99000-31110
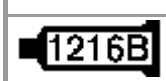	Apply SUZUKI BOND 1216B. 99000-31230
	Apply THREAD LOCK CEMENT 1303B. 99000-32030
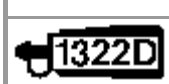	Apply THREAD LOCK CEMENT 1322D. 99000-32150
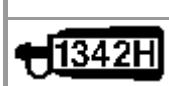	Apply THREAD LOCK CEMENT 1342H. 99000-32160
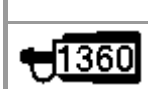	Apply THREAD LOCK CEMENT 1360. 99000-32130
	Use SUZUKI SUPER LONG LIFE COOLANT (BLUE). 99000-99032-20X
	Use SUZUKI LONG LIFE COOLANT (GREEN). 99000-99032-12X

	Apply or use fork oil.
	Apply or use brake fluid.
	Use special tool.
	Do not reuse.
	Note on reassembly.

Wire Color Symbols

Symbol	Wire Color	Symbol	Wire Color
B	Black	Lg	Light green
Bl	Blue	O	Orange
Br	Brown	P	Pink
Dbr	Dark brown	R	Red
Dg	Dark green	V	Violet
G	Green	W	White
Gr	Gray	Y	Yellow
Lbl	Light blue		

There are two kinds of colored wire used in this vehicle. One is single-colored wire and the other is dual-colored (striped) wire.
The single-colored wire uses only one color symbol (i.e. G). The dual-colored wire uses two color symbols (i.e. G/Y). The first symbol represents the base color of the wire and the second symbol represents the color of the stripe.

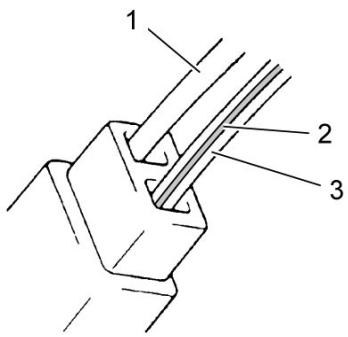

1.	G (Base color)	3.	G (Base Color)
2.	Y (Stripe color)		

Vehicle Identification Number

The frame serial number or V.I.N. (Vehicle Identification Number) (1) is stamped on the steering head tube. The engine serial number (2) is located on the crankcase assembly.

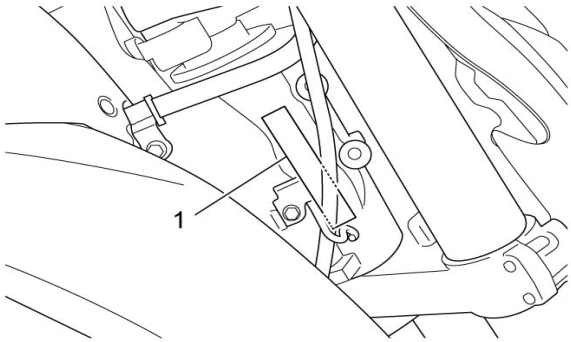

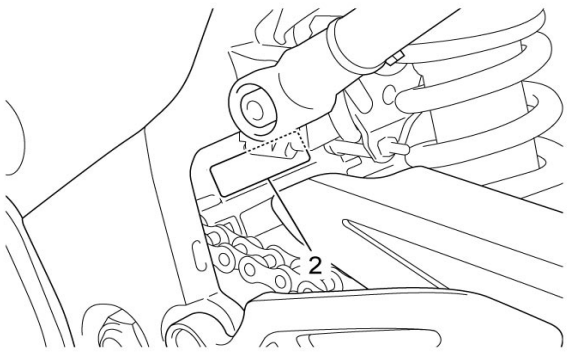

Vehicle Side View

SUZUKI GSX-S1000/A (2015+ model)

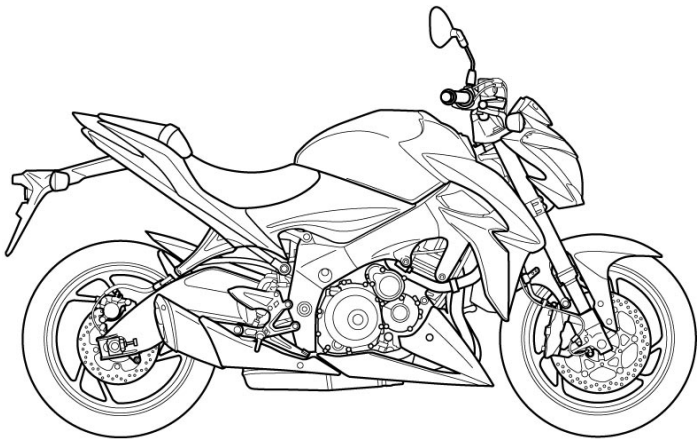

SUZUKI GSX-S1000F/FA (2015+ model)

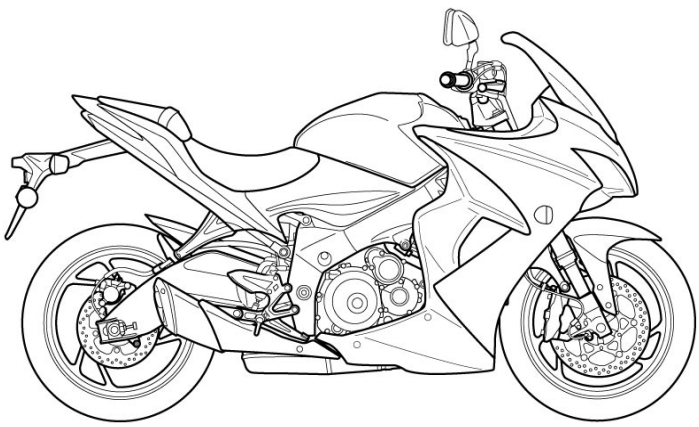

Warning, Caution and Information Labels Location

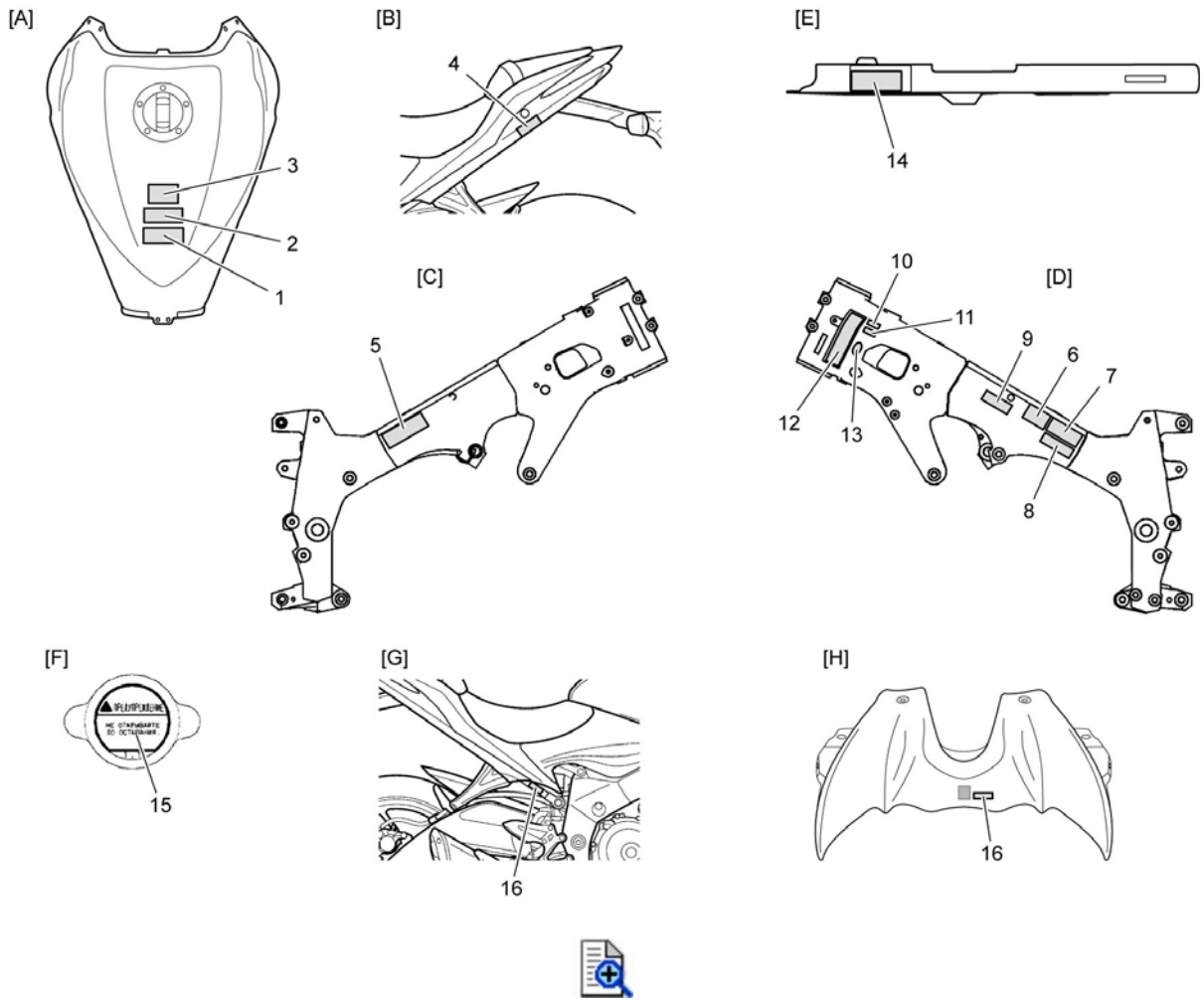

[A]:	Fuel tank	1.	Fuel limitation label or Helmet label (If equipped)	9.	ICES Canada label (If equipped)
[B]:	Left frame rear lower cover	2.	Fuel information label	10.	Brake approval mark label (If equipped)
[C]:	Frame (RH)	3.	General warning label	11.	Noise approval mark label (If equipped)
[D]:	Frame (LH)	4.	Manual notice label (If equipped)	12.	Manufacturer label, I.D. plate, Safety plate, Production label (If equipped)
[E]:	Chain case	5.	Vacuum hose routing label (If equipped)	13.	License label (If equipped)
[F]:	Radiator cap	6.	I.D. label (If equipped)	14.	Tire information label
[G]:	Seat rail (RH)	7.	Information label, Noise label or Un noise label (If equipped)	15.	Radiator cap label (If equipped)
[H]:	Fuel tank upper cover	8.	EPA noise label or Un noise label (If equipped)	16.	Brake fluid information label (If equipped)

Electrical Components Location

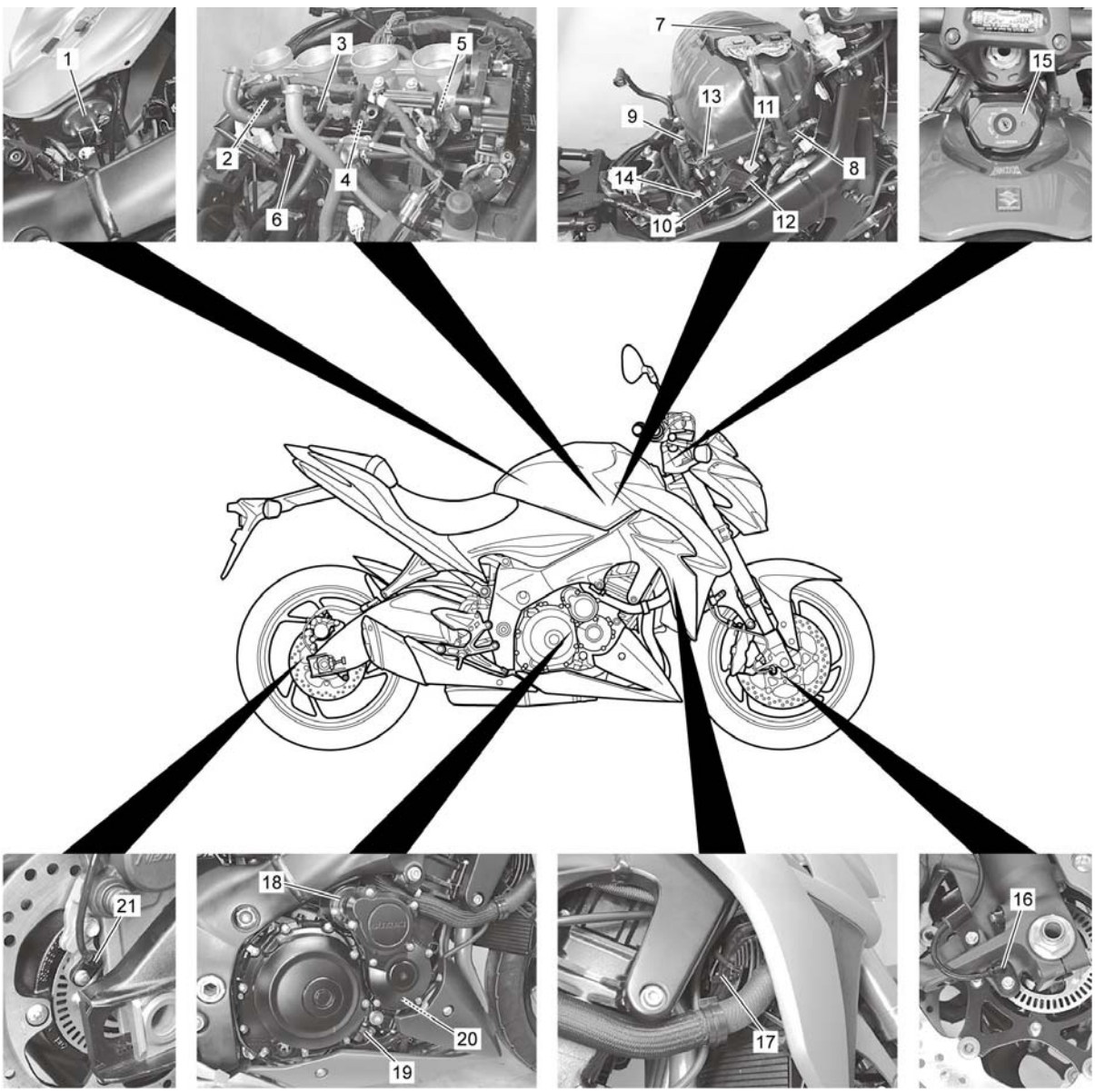

1.	Fuel pump/Fuel level gauge	8.	AP sensor	15.	Immobilizer antenna (If equipped)
2.	Fuel injector #1	9.	IAP sensor	16.	Front wheel speed sensor
3.	Fuel injector #2	10.	STV actuator	17.	Cooling fan
4.	Fuel injector #3	11.	STP sensor	18.	Starter motor
5.	Fuel injector #4	12.	TP sensor	19.	Oil pressure switch
6.	ECT sensor	13.	IAT sensor	20.	CKP sensor

7.	ECM	14.	EVAP system purge control solenoid valve (If equipped)	21.	Rear wheel speed sensor

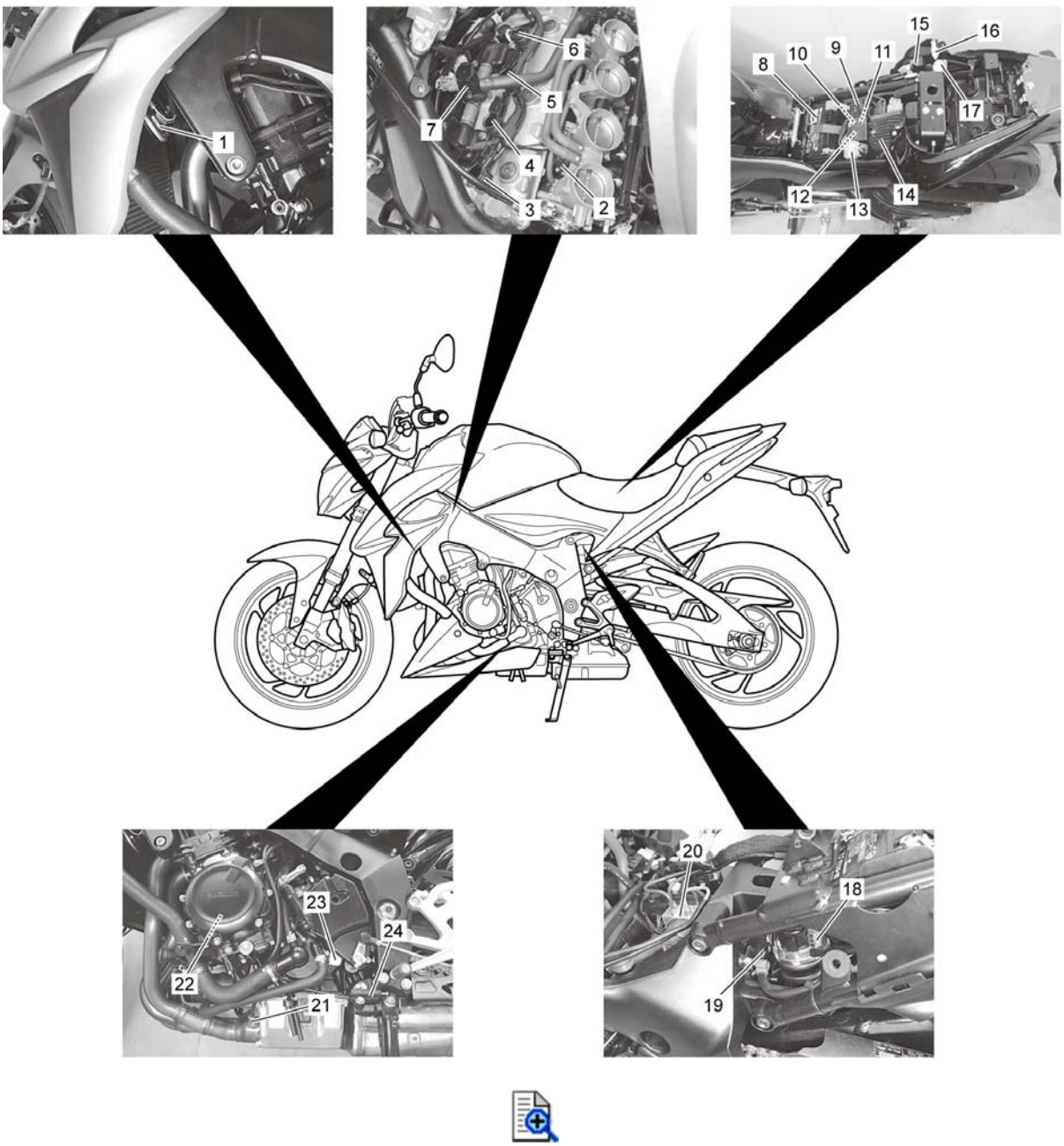

1.	Horn	9.	Fuse box	17.	Mode select coupler (6P)
2.	ISC valve	10.	Cooling fan relay	18.	TO sensor
3.	Ignition coil #1	11.	Side-stand relay	19.	EXCV actuator
4.	Ignition coil #2	12.	Fuel pump relay	20.	ABS control unit/HU
5.	Ignition coil #3	13.	Starter relay/Main fuse	21.	HO2 sensor
6.	Ignition coil #4	14.	Regulator/rectifier	22.	Generator
7.	PAIR control solenoid valve	15.	Turn signal relay	23.	GP switch

8.	Battery	16.	Mode select coupler (2P)	24.	Side-stand switch

Precautions for Maintenance

The “Periodic Maintenance Schedule Chart” lists the recommended intervals for all the required periodic service work necessary to keep the motorcycle operating at peak performance and economy. Maintenance intervals are expressed in terms of kilometers, miles and months for your convenience.

NOTE:
More frequent servicing may be required on motorcycles that are used under severe conditions.

Periodic Maintenance Schedule Chart

NOTE:
- **I = Inspect and clean, adjust, replace or lubricate as necessary.**
  R = Replace.
  T = Tighten.
- **(CA. only) means that the item or the maintenance interval is to be applied only for the California model.**

For Europe and Oceania Countries

Item		Interval				
	months	2	12	24	36	48
	km	1000	12000	24000	36000	48000
	miles	600	7500	15000	22500	30000
Air cleaner element (I: ☞ , R: ☞)		—	I	I	R	I
Exhaust pipe bolts and muffler bolts (T: ☞)		T	T	T	T	T
Exhaust control valve (I: ☞)		I	—	I	—	I
Valve clearance (I: ☞)		Inspect every 24000 km (15000 miles).				
Spark plugs (I: ☞ , R: ☞)		—	R	R	R	R
Fuel hose (I: ☞)		—	I	I	I	I
Engine oil (R: ☞)		R	R	R	R	R
Engine oil filter (R: ☞)		R	—	R	—	R
Throttle cable play (I: ☞)		I	I	I	I	I
PAIR (air supply) system (I: ☞)		—	—	I	—	I
Throttle valve synchronization (I: ☞)		—	I	I	I	I
Engine coolant (R: ☞)	“SUZUKI SUPER LONG LIFE COOLANT” (Blue)	—	—	—	—	R
	“SUZUKI LONG LIFE COOLANT” (Green) or an engine coolant other than “SUZUKI SUPER LONG LIFE COOLANT” (Blue)	—	—	R	—	R
Radiator hose (I: ☞)		—	I	I	I	I
Clutch cable play (I: ☞)		—	I	I	I	I
Drive chain (I: ☞ , I: ☞)		I	I	I	I	I
		Clean and lubricate every 1000 km (600 miles).				
Brakes (I: ☞)		I	I	I	I	I
Brake fluid (I: ☞ , R: ☞)		Inspect every year or 6000 km (4000 miles). Replace every 2 years.				
Brake hose (I: ☞ , R: ☞)		—	I	I	I	I
		Replace every 4 years.				
Tires (I: ☞)		—	I	I	I	I
Steering (I: ☞)		I	I	I	I	I

Front forks (I: ☞)		—	I	I	I	I
Rear suspension (I: ☞)		—	I	I	I	I
Chassis bolts and nuts (T: ☞)		T	T	T	T	T
Lubrication (I: ☞)		Lubricate at every 1000 km (600 miles).				

Except for Europe and Oceania Countries

Item		Interval				
	months	2	12	24	36	48
	km	1000	6000	12000	18000	24000
	miles	600	4000	7500	11000	14500
Air cleaner element (I: ☞ , R: ☞)		—	I	I	R	I
Exhaust pipe bolts and muffler bolts (T: ☞)		T	—	T	—	T
Exhaust control valve (I: ☞)		I	—	I	—	I
Valve clearance (I: ☞)		—	—	—	—	I
Spark plugs (I: ☞ , R: ☞)		—	I	R	I	R
Fuel hose (I: ☞)		—	I	I	I	I
Evaporative emission control system (If equipped) (I: ☞)		—	—	I	—	I
Engine oil (R: ☞)		R	R	R	R	R
Engine oil filter (R: ☞)		R	—	—	R	—
Throttle cable play (I: ☞)		I	I	I	I	I
PAIR (air supply) system (I: ☞)		—	—	I	—	I
Throttle valve synchronization (I: ☞)		I (CA. only)	—	I	—	I
Engine coolant (R: ☞)	“SUZUKI SUPER LONG LIFE COOLANT” (Blue)	Replace every 4 years or 48000 km (29000 miles)				
	“SUZUKI LONG LIFE COOLANT” (Green) or an engine coolant other than “SUZUKI SUPER LONG LIFE COOLANT” (Blue)	—	—	R	—	R
Radiator hose (I: ☞)		—	I	I	I	I
Clutch cable play (I: ☞)		—	I	I	I	I
Drive chain (I: ☞ , I: ☞)		I	I	I	I	I
		Clean and lubricate every 1000 km (600 miles).				
Brakes (I: ☞)		I	I	I	I	I
Brake fluid (I: ☞ , R: ☞)		—	I	I	I	I
		Replace every 2 years.				
Brake hose (I: ☞ , R: ☞)		—	I	I	I	I
		Replace every 4 years.				
Tires (I: ☞)		—	I	I	I	I
Steering (I: ☞)		I	—	I	—	I

Front forks (I: ☞)	—	—	I	—	I
Rear suspension (I: ☞)	—	—	I	—	I
Chassis bolts and nuts (T: ☞)	T	T	T	T	T
Lubrication (I: ☞)	Lubricate at every 1000 km (600 miles).				

Chassis Bolt and Nut Inspection

Check that all chassis bolts and nuts are tightened to their specified torque.

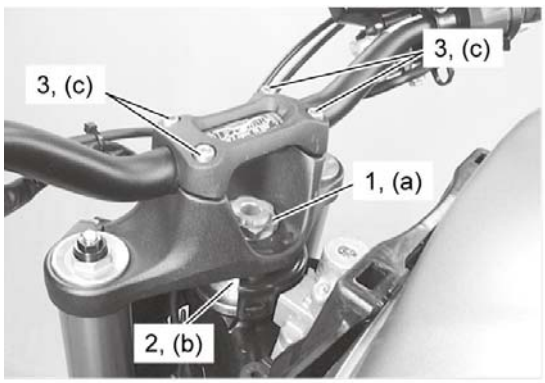

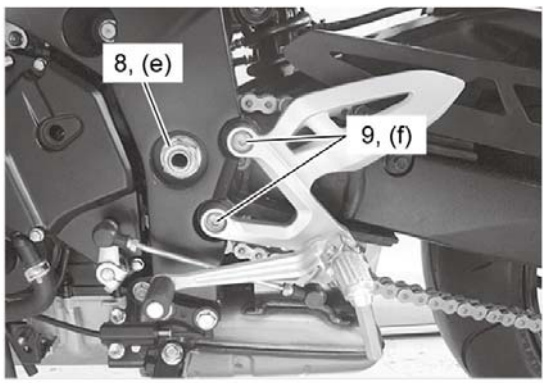

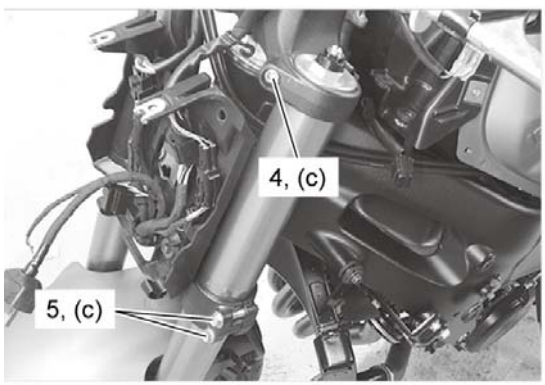

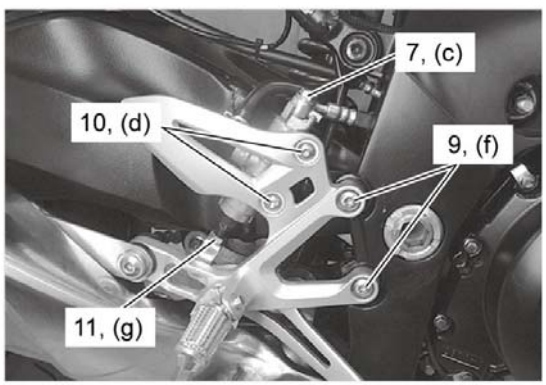

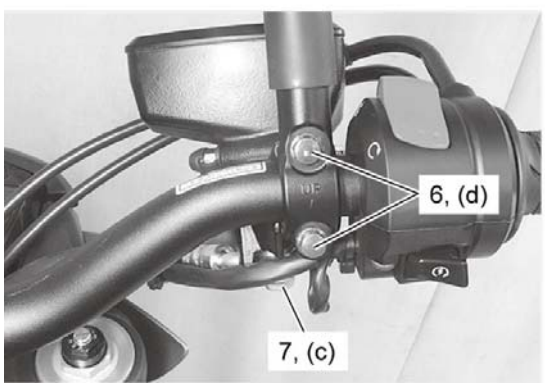

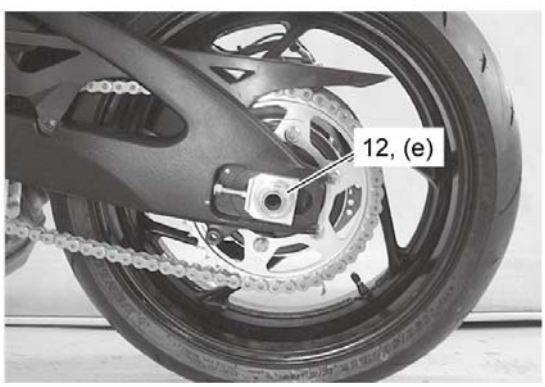

1.	Steering stem head nut	8.	Swingarm pivot nut	(c):	23 N·m (2.3 kgf-m, 17.0 lbf-ft)
2.	Steering stem lock-nut	9.	Front footrest bolt	(d):	10 N·m (1.0 kgf-m, 7.5 lbf-ft)
3.	Handlebar clamp bolt	10.	Rear brake master cylinder bolt	(e):	100 N·m (10.2 kgf-m, 74.0 lbf-ft)
4.	Front fork upper clamp bolt	11.	Rear brake master cylinder rod lock-nut	(f):	26 N·m (2.7 kgf-m, 19.5 lbf-ft)
5.	Front fork lower clamp bolt	12.	Rear axle nut	(g):	18 N·m (1.8 kgf-m, 13.5 lbf-ft)
6.	Front brake master cylinder holder bolt	(a):	90 N·m (9.2 kgf-m, 66.5 lbf-ft)		

7.	Brake hose union bolt	(b):	80 N·m (8.2 kgf-m, 59.0 lbf-ft)		

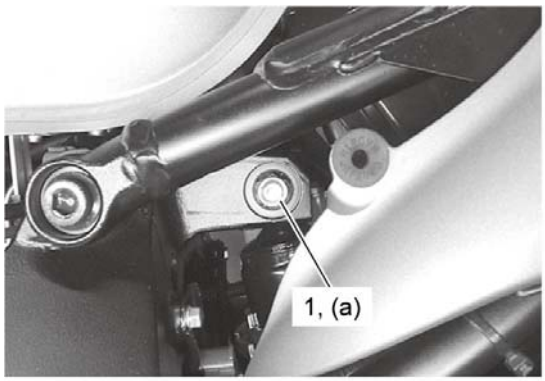

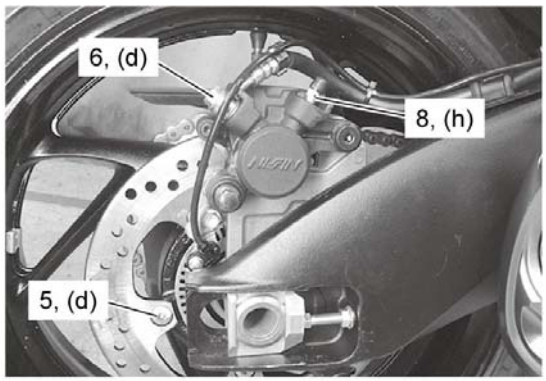

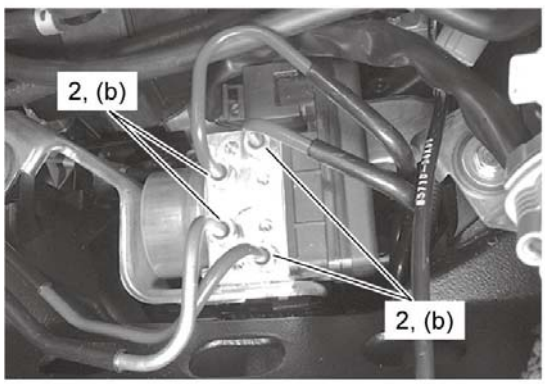

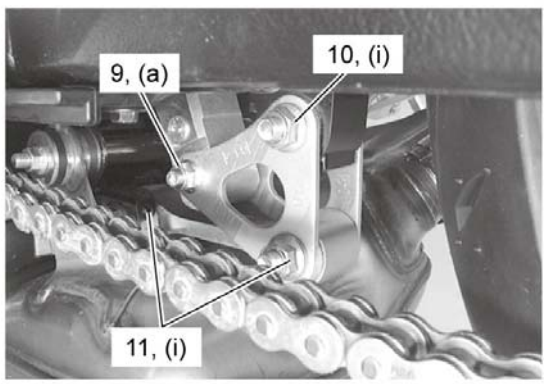

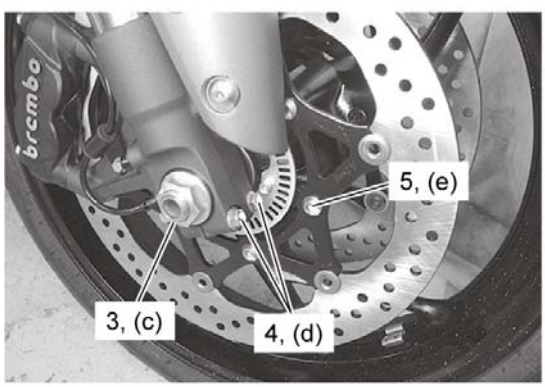

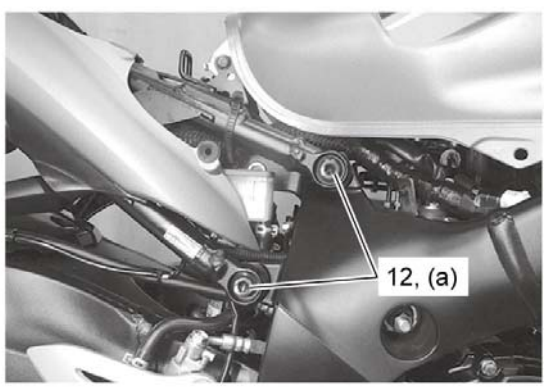

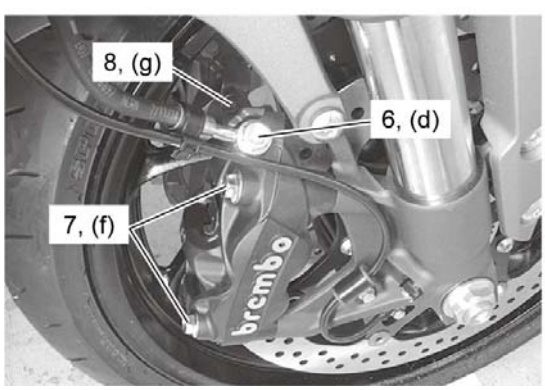

1.	Rear shock absorber upper	8.	Brake air bleeder valve	(c):	100 N·m (10.2 kgf-m, 74.0

2.	Brake pipe flare nut	9.	Rear shock absorber lower mounting nut	(d):	23 N·m (2.3 kgf-m, 17.0 lbf-ft)
3.	Front axle nut	10.	Cushion lever nut	(e):	18 N·m (1.8 kgf-m, 13.5 lbf-ft)
4.	Front axle pinch bolt	11.	Cushion rod nut	(f):	39 N·m (4.0 kgf-m, 29.0 lbf-ft)
5.	Brake disc bolt	12.	Seat rail bolt	(g):	7.5 N·m (0.76 kgf-m, 5.55 lbf-ft)
6.	Brake hose union bolt	(a):	50 N·m (5.1 kgf-m, 37.0 lbf-ft)	(h):	6 N·m (0.61 kgf-m, 4.45 lbf-ft)
7.	Front brake caliper mounting bolt	(b):	16 N·m (1.6 kgf-m, 12.0 lbf-ft)	(i):	80 N·m (8.2 kgf-m, 59.0 lbf-ft)

Lubrication Points

Proper lubrication is important for smooth operation and long life of each working part of the motorcycle.
Major lubrication points are indicated as follows.

NOTE:
- **Before lubricating each part, clean off any rusty spots and wipe off any grease, oil, dirt or grime.**
- **Lubricate exposed parts which are subject to rust, with a rust preventative spray whenever the motorcycle has been operated under wet or rainy conditions.**

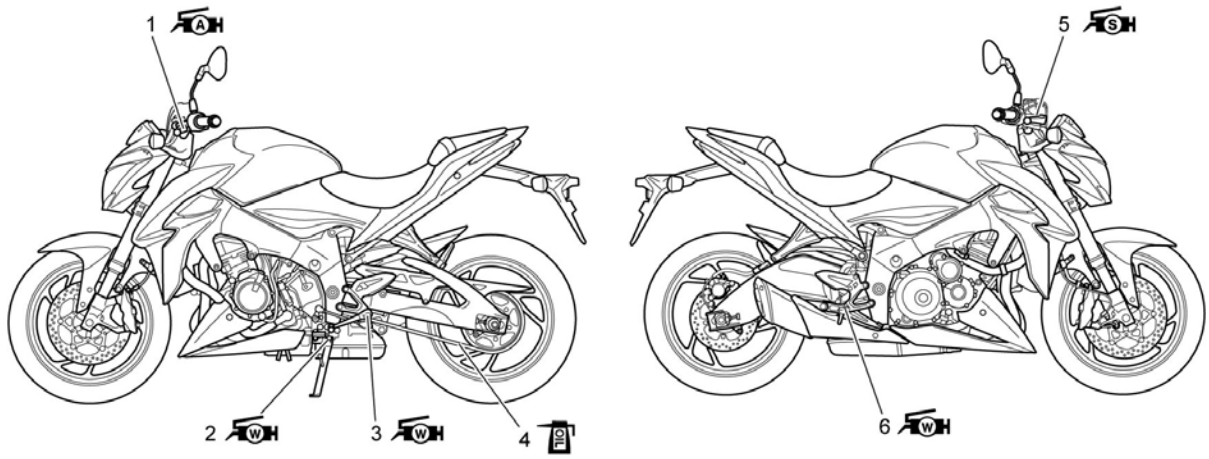

1.	Clutch lever pivot	5.	Brake lever pivot	:	Apply silicone grease.
2.	Side-stand pivot and spring hook	6.	Brake pedal pivot and footrest pivot	:	Apply water resistant grease EP2.
3.	Gearshift lever pivot and footrest pivot	:	Apply oil.		
4.	Drive chain	:	Apply grease.		

Specifications

Dimensions and curb mass

Item	Specification	Remark
Overall length	2115 mm (83.3 in)	—
Overall width	795 mm (31.3 in)	—
Overall height	1080 mm (42.5 in)	GSX-S1000/A
	1180 mm (46.5 in)	GSX-S1000F/FA
Wheelbase	1460 mm (57.5 in)	—
Ground clearance	140 mm (5.5 in)	—
Seat height	810 mm (31.9 in)	—
Curb mass	207 kg (456 lbs)	GSX-S1000 (E.U.)
	209 kg (461 lbs)	GSX-S1000A (E.U., Australia, Malaysia, Indonesia, Korea, Middle East)
	212 kg (467 lbs)	GSX-S1000F (E.U.)
	214 kg (472 lbs)	GSX-S1000FA (E.U., Australia, Malaysia, Indonesia, Korea, Middle East)
	208 kg (459 lbs)	GSX-S1000 (California State)
	210 kg (463 lbs)	GSX-S1000A (Canada, Thailand, Taiwan, China, U.S.A., California State, Vietnam)
	213 kg (470 lbs)	GSX-S1000F (California State)
	215 kg (474 lbs)	GSX-S1000FA (Canada, California State, Thailand, Taiwan)

Engine

Item	Specification	Remark
Type	Four-stroke, liquid-cooled, DOHC	—
Number of cylinders	4	—
Bore	73.4 mm (2.890 in)	—
Stroke	59.0 mm (2.323 in)	—
Displacement	999 cm^3 (61.0 cu. in)	—
Compression ratio	12.2 : 1	—
Fuel system	Fuel injection	—
Air cleaner	Paper element	—
Starter system	Electric	—
Lubrication system	Wet sump	—
Idle speed	1150 ± 100 r/min	—

Drive train

Item		Specification	Remark
Clutch		Wet multi-plate type	—
Transmission		6-speed constant mesh	—
Gearshift pattern		1-down, 5-up	—
Primary reduction ratio		1.553 (73/47)	—
Gear ratios	Low	2.562 (41/16)	—
	2nd	2.052 (39/19)	—
	3rd	1.714 (36/21)	—
	4th	1.500 (36/24)	—
	5th	1.360 (34/25)	—
	Top	1.269 (33/26)	—
Final reduction ratio		2.588 (44/17)	—
Drive chain		RK525GSH, 116 links	—

Chassis

Item	Specification	Remark
Front suspension	Inverted telescopic, coil spring, oil damped	—
Rear suspension	Link type, coil spring, oil damped	—
Front fork stroke	120 mm (4.7 in)	—
Rear wheel travel	130 mm (5.1 in)	—
Steering angle	31° (right and left)	—
Caster	25°	—
Trail	100 mm (3.9 in)	—
Turning radius	3.1 m (10.2 ft)	—
Front brake	Disc brake, twin	—
Rear brake	Disc brake	—
Front tire size	120/70ZR17M/C (58W), tubeless	—
Rear tire size	190/50ZR17M/C (73W), tubeless	—

Electrical

Item	Specification	Remark
Ignition type	Electronic ignition (Transistorized)	—
Spark plug	NGK CR9EIA-9 or DENSO IU27D	—
Battery	12 V 36.0 kC (10 Ah)/10 HR	—
Generator	Three-phase A.C. generator	—
Main fuse	30 A	—
Fuse	10/10/10/10/10/15 A	—
ABS fuse	20/15 A	GSX-S1000A/FA
Headlight	12 V 60/55 W (H4)	GSX-S1000/A
	12 V 55 W (H7) x 2	GSX-S1000F/FA
Position light	LED	If equipped
Brake light/Tail light	LED	—
Turn signal light	12 V 21 W x 4	—
License plate light	12 V 5 W	—

Instrument panel light	LED	—
Neutral indicator light	LED	—
High beam indicator light	LED	—
Turn signal indicator light	LED	—
Oil pressure/Coolant temperature indicator light	LED	—
MIL	LED	—
Traction control system indicator light	LED	—
ABS indicator light	LED	GSX-S1000A/FA
Immobilizer indicator light	LED	If equipped

Capacities

Item		Specification	Remark
Fuel tank		17.0 L (4.5 US gal, 3.7 Imp gal)	—
Engine oil	Oil change	2800 ml (3.0 US qt, 2.5 Imp qt)	—
	With filter change	3200 ml (3.4 US qt, 2.8 Imp qt)	—
Engine coolant		2.8 L (3.0 US qt, 2.5 Imp qt)	—

Service Data

Emission Control Devices

Item	Specification	Standard	Limit
EVAP system purge control solenoid valve power supply voltage (If equipped)		Battery voltage	
EVAP system purge control solenoid valve resistance (If equipped)	20 °C (68 °F)	30 – 34 Ω	
PAIR control solenoid valve power supply voltage		Battery voltage	
PAIR control solenoid valve resistance	20 – 30 °C (68 – 86 °F)	20 – 24 Ω	

Engine Electrical Devices

Item	Specification	Standard	Limit
AP sensor power supply voltage		4.75 – 5.25 V	—
AP sensor output voltage	Idle speed at 1 atm.	Approx. 2.8 V	—
IAP sensor power supply voltage		4.75 – 5.25 V	—
IAP sensor output voltage	Idle speed at 1 atm.	Approx. 2.7 V	—
IAT sensor power supply voltage		4.5 – 5.5 V	—
IAT sensor output voltage		0.15 – 4.85 V	—
IAT sensor resistance	0 °C (32 °F)	5400 – 6600 Ω	—
	80 °C (176 °F)	290 – 390 Ω	—
ECT sensor power supply voltage		4.5 – 5.5 V	—
ECT sensor resistance	–20 °C (–4 °F)	13840 –16330 Ω	—
	20 °C (68 °F)	2320 – 2590 Ω	
	80 °C (176 °F)	310 – 326 Ω	
TP sensor power supply voltage		4.5 – 5.5 V	—
TP sensor output voltage	Closed	1.10 – 1.14 V	—
	Opened	Approx. 4.5 V	
STP sensor power supply voltage		4.5 – 5.5 V	—
STP sensor output voltage	Closed	0.57 – 0.67 V	—
	Opened	Approx. 4.5 V	
ISC valve resistance	20 °C (68 °F)	Approx. 20 Ω	—
HO2 sensor output voltage	Idle speed	0.6 V or less	—
	5000 r/min	0.6 V or more	
HO2 sensor heater power supply voltage		Battery voltage	—
HO2 sensor heater resistance	23 °C (73.4 °F)	11.5 – 17.5 Ω	—
CKP sensor peak voltage	When cranking	0.5 V or more	—
CKP sensor resistance	20 °C (68 °F)	Approx. 168 Ω	—
TO sensor power supply voltage		4.5 – 5.5 V	—
TO sensor output voltage	Normal	0.4 – 1.4 V	—
	Leaning 65°	3.7 – 4.4 V	
TO sensor resistance		16500 – 22300 Ω	—
ECM power supply voltage		Battery voltage	—

Engine Mechanical

Item	Specification		Standard	Limit
Throttle body I.D. No.	For Thailand, Taiwan, Vietnam, China and California State		04K1	—
	Except for Thailand, Taiwan, Vietnam, China and California State		04K0	—
Throttle body bore size			44 mm (1.7 in)	—
Throttle cable play			2.0 – 4.0 mm (0.079 – 0.157 in)	—
Idle speed	When engine warmed		1150 ± 100 r/min	—
Fast idle speed			1150 – 2000 r/min	—
STVA resistance			Approx. 7.8 Ω	—
Compression pressure			1300 – 1700 kPa (13.3 – 17.3 kgf/cm^2, 188 – 246 psi)	1000 kPa (10.2 kgf/cm^2, 145 psi)
Compression pressure difference			—	200 kPa (2 kgf/cm^2, 28 psi)
Cam height	Intake		36.78 – 36.83 mm (1.448 – 1.450 in)	36.48 mm (1.437 in)
	Exhaust		36.63 – 36.68 mm (1.443 – 1.444 in)	36.33 mm (1.431 in)
Camshaft journal oil clearance	Intake		0.032 – 0.066 mm (0.0013 – 0.0025 in)	0.150 mm (0.0059 in)
	Exhaust		0.032 – 0.066 mm (0.0013 – 0.0025 in)	0.150 mm (0.0059 in)
Camshaft journal holder I.D.	Intake		24.012 – 24.025 mm (0.9454 – 0.9458 in)	—
	Exhaust		24.012 – 24.025 mm (0.9454 – 0.9458 in)	
Camshaft journal O.D.	Intake		23.959 – 23.980 mm (0.9433 – 0.9440 in)	—
	Exhaust		23.959 – 23.980 mm (0.9433 – 0.9440 in)	
Camshaft runout	Intake & Exhaust		—	0.10 mm (0.004 in)
Cam chain pin	At arrow "3"		14th pin	—
Valve clearance	When engine cold	Intake	0.10 – 0.20 mm (0.0040 – 0.0078 in)	—
		Exhaust	0.20 – 0.30 mm (0.0079 – 0.0118 in)	
Valve diameter	Intake		30 mm (1.2 in)	—
	Exhaust		24 mm (0.94 in)	
Valve stem runout	Intake & Exhaust		—	0.05 mm (0.0019 in)
Valve head radial runout	Intake & Exhaust		—	0.03 mm (0.0011 in)
Valve head thickness	Intake		—	0.5 mm (0.019 in)
	Exhaust		—	0.5 mm (0.019 in)

Valve stem O.D.	Intake		4.475 – 4.490 mm (0.1762 – 0.1767 in)	—
	Exhaust		4.455 – 4.470 mm (0.1754 – 0.1759 in)	—
Valve seat width	Intake		0.9 – 1.1 mm (0.036 – 0.043 in)	—
	Exhaust		0.9 – 1.1 mm (0.036 – 0.043 in)	—
Valve guide I.D.	Intake		4.500 – 4.512 mm (0.1772 – 0.1776 in)	—
	Exhaust		4.500 – 4.512 mm (0.1772 – 0.1776 in)	—
Valve guide to valve stem clearance	Intake		0.010 – 0.037 mm (0.0004 – 0.0014 in)	—
	Exhaust		0.030 – 0.057 mm (0.0012 – 0.0022 in)	—
Valve spring free length	Intake		—	37.3 mm (1.47 in)
	Exhaust		—	37.3 mm (1.47 in)
Valve spring pre-load	When compressed to 33.55 mm (1.321 in)	Intake	141 – 163 N (14.4 – 16.6 kgf, 31.7 – 36.6 lbs)	—
		Exhaust	141 – 163 N (14.4 – 16.6 kgf, 31.7 – 36.6 lbs)	—
Cylinder head distortion			—	0.20 mm (0.0078 in)
Cylinder distortion			—	0.20 mm (0.0078 in)
Cylinder bore			73.400 – 73.415 mm (2.8898 – 2.8903 in)	No nicks or Scratches
Piston diameter	Measure at 8 mm (0.3 in) from the skirt end.		73.370 – 73.385 mm (2.8886 – 2.8891 in)	73.280 mm (2.8851 in)
Piston to cylinder clearance			0.025 – 0.035 mm (0.0010 – 0.0013 in)	0.120 mm (0.0047 in)
Piston ring to groove clearance	1st		—	0.180 mm (0.0070 in)
	2nd		—	0.150 mm (0.0059 in)
Piston ring groove width	1st		0.81 – 0.83 mm (0.0319 – 0.0326 in)	—
	2nd		0.81 – 0.83 mm (0.0319 – 0.0326 in)	—
	Oil		1.51 – 1.53 mm (0.0595 – 0.0602 in)	—
Piston ring thickness	1st		0.77 – 0.79 mm (0.0304 – 0.0311 in)	—
	2nd		0.77 – 0.79 mm (0.0304 – 0.0311 in)	—
Piston ring free end gap	1st		Approx. 9 mm (0.4 in)	7.2 mm (0.29 in)
	2nd		Approx. 8 mm (0.3 in)	6.4 mm (0.26 in)

Piston ring end gap	1st	0.06 – 0.18 mm (0.0024 – 0.0070 in)	0.50 mm (0.019 in)
	2nd	0.06 – 0.18 mm (0.0024 – 0.0070 in)	0.50 mm (0.019 in)
Piston pin bore I.D.		16.002 – 16.008 mm (0.6300 – 0.6302 in)	16.030 mm (0.6311 in)
Piston pin O.D.		15.995 – 16.000 mm (0.6298 – 0.6299 in)	15.980 mm (0.6292 in)
Conrod small end I.D.		16.010 – 16.018 mm (0.6304 –0.6306 in)	16.040 mm (0.6314 in)
Conrod big end side clearance		0.10 – 0.20 mm (0.0040 – 0.0078 in)	0.3 mm (0.011 in)
Conrod big end width		19.95 – 20.00 mm (0.7855 – 0.7874 in)	—
Conrod big end I.D.		38.000 – 38.016 mm (1.4961 – 1.4966 in)	—
Conrod big end oil clearance		0.040 – 0.064 mm (0.0016 – 0.0025 in)	0.080 mm (0.0031 in)
Crank pin width		20.10 – 20.15 mm (0.7914 – 0.7933 in)	—
Crank pin O.D.		34.976 – 35.000 mm (1.3770 – 1.3779 in)	—
Crank pin bearing thickness		1.476 – 1.492 mm (0.0582 – 0.0587 in)	—
Crankshaft journal O.D.		34.982 – 35.000 mm (1.3773 – 1.3779 in)	—
Crankshaft journal oil clearance		0.010 – 0.028 mm (0.0004 – 0.0011 in)	0.080 mm (0.0031 in)
Crankcase journal I.D.		38.000 – 38.018 mm (1.4961 – 1.4967 in)	—
Crankcase journal bearing thickness		1.492 – 1.507 mm (0.0588 – 0.0593 in)	—
Crankshaft thrust bearing thickness	Right side	2.42 – 2.44 mm (0.0953 – 0.0960 in)	—
	Left side	2.36 – 2.50 mm (0.0930 – 0.0984 in)	—
Crankshaft thrust clearance		0.060 – 0.110 mm (0.0024 – 0.0043 in)	—
Crankshaft runout		—	0.05 mm (0.0019 in)
Balancer journal oil clearance		0.028 – 0.052 mm (0.0011 – 0.0020 in)	0.080 mm (0.0031 in)
Balancer journal O.D.		22.976 – 22.992 mm (0.9046 – 0.9051 in)	—

Engine Lubrication System

Item	Specification	Standard	Limit
Oil pressure	At 60 °C (140 °F), 3000 r/min	100 – 400 kPa (1.0 – 4.1 kgf/cm^2, 14.5 – 58.0 psi)	—
Necessary amount of engine oil	Oil change	2800 ml (3.0 US qt, 2.5 Imp qt)	—
	Oil and filter change	3200 ml (3.4 US qt, 2.8 Imp qt)	
	Engine overhaul	3400 ml (3.6 US qt, 3.0 Imp qt)	

Cooling System

Item	Specification	Standard	Limit
Engine coolant	Engine side	Approx. 2500 ml (5.28 US qt, 4.40 Imp qt)	—
	Reservoir tank side	Approx. 250 ml (0.53 US qt, 0.44 Imp qt)	
Radiator cap valve opening pressure		107.9 – 137.3 kPa (1.1 – 1.4 kgf/cm^2, 15.7 – 19.9 psi)	—
Cooling fan relay power supply voltage		Battery voltage	—
Cooling fan operating temperature	OFF → ON	Approx. 105 °C (221 °F)	—
	ON → OFF	Approx. 100 °C (212 °F)	
Thermostat valve opening temperature		Approx. 82 °C (179.6 °F)	—
Thermostat valve lift	95 °C (203 °F)	8 mm (0.3 in) or more	—

Fuel System

Item	Specification	Standard	Limit
Fuel injector power supply voltage		Battery voltage	
Fuel injector resistance	20 °C (68 °F)	11.5 – 12.5 Ω	—
FP relay power supply voltage		Battery voltage	—
FP discharge amount	Per 10 seconds	223 ml (7.55 US oz, 7.85 Imp oz) or more	—
Fuel pressure regulator operating set pressure		289 – 299 kPa (2.95 – 3.04 kgf/cm^2, 42.0 – 43.3 psi)	—

Ignition System

Item	Specification		Standard	Limit
Firing order			1·2·4·3	—
Spark plug	Type		NGK: CR9EIA-9 / DENSO: IU27D	—
	Gap		0.8 – 0.9 mm (0.032 – 0.035 in)	
Spark performance	At 1 atm		8 mm (0.3 in) or more	—
Ignition coil primary peak voltage			80 V or more	—
Ignition coil resistance	Primary	10 – 30 °C (50 – 86 °F)	1.1 – 1.9 Ω	—
	Secondary		6400 – 9600 Ω	
Immobilizer antenna power supply voltage (If equipped)			Battery voltage	—

Starting System

Item	Specification	Standard	Limit
Starter motor brush length		12 mm (0.47 in)	8.5 mm (0.33 in)
Starter relay resistance		3 – 6 Ω	—

Side-stand switch voltage	ON (Side-stand retracted)	0.4 – 0.6 V	—
	OFF (Side-stand on the ground)	1.4 V or more	

Charging System

Item	Specification		Standard	Limit
Battery leakage current			3 mA or less	—
Regulated voltage	Charging output	At 5000 r/min	14.0 – 15.5 V	—
Generator coil resistance	20 °C (68 °F)		0.12 – 0.18 Ω	—
Generator no-load voltage	When engine cold	At 5000 r/min	65 V (AC) or more	—
Recharging time	Standard charging		1.2 A for 5 to 10 hours	—
	Fast charging		5 A for 1 hour	
Generator Max. output	At 5000 r/min		Approx. 385 W	—
Battery	Type designation		FT12A-BS	—
	Capacity		12 V 36.0 kC (10Ah)/10 HR	

Exhaust System

Item	Specification	Standard	Limit
EXCVA position sensor power supply voltage		4.5 – 5.5 V	—
EXCVA position sensor output voltage	Closed	0.45 – 1.40 V	—
	Opened	3.60 – 4.55 V	
EXCVA position sensor resistance	At adjustment position	Approx. 3100 Ω	—

Front Suspension

Item	Specification		Standard	Limit
Front fork inner tube O.D.			43 mm (1.7 in)	—
Front fork oil level	Without spring, outer tube fully compressed	GSX-S1000/A	95 mm (3.7 in)	—
		GSX-S1000F/FA	91 mm (3.6 in)	—
Front fork spring free length			271.1 mm (10.67 in)	265 mm (10.5 in)
Front fork oil capacity	Each leg	GSX-S1000/A	518 ml (17.52 US oz, 18.23 Imp oz)	—
		GSX-S1000F/FA	523 ml (17.68 US oz, 18.41 Imp oz)	—
Front fork spring adjuster			10 mm (0.39 in)	—
Front fork damping force adjuster	Rebound side		8 clicks counterclockwise from stiffest position	—
	Compression side		8 clicks counterclockwise from stiffest position	

Rear Suspension

Item	Specification	Standard	Limit
Rear shock absorber spring adjuster	GSX-S1000/A	4th position	—

	GSX-S1000F/FA	3rd position	—
Rear shock absorber damping force adjuster	Rebound side	1 turn counterclockwise from stiffest position	—
Swingarm pivot shaft runout		—	0.3 mm (0.011 in)

Wheels and Tires

Item	Specification		Standard	Limit
Wheel rim runout	Front	Axial & Radial	—	2.0 mm (0.08 in)
	Rear	Axial & Radial	—	2.0 mm (0.08 in)
Wheel axle runout	Front		—	0.25 mm (0.010 in)
	Rear		—	0.25 mm (0.010 in)
Tire size	Front		120/70ZR17M/C (58W)	—
	Rear		190/50ZR17M/C (73W)	
Tire type	Front		DUNLOP/D214F M	—
	Rear		DUNLOP/D214 M	
Tire tread depth (Recommended depth)	Front		—	1.6 mm (0.062 in)
	Rear		—	2.0 mm (0.078 in)
Cold inflation tire pressure	Solo riding	Front	250 kPa (2.50 kgf/cm^2, 36 psi)	—
		Rear	290 kPa (2.90 kgf/cm^2, 42 psi)	
	Dual riding	Front	250 kPa (2.50 kgf/cm^2, 36 psi)	—
		Rear	290 kPa (2.90 kgf/cm^2, 42 psi)	
Wheel rim size	Front		17 M/C x MT 3.50	—
	Rear		17 M/C x MT 6.00	

Drive Chain / Drive Train / Drive Shaft

Item	Specification	Standard	Limit
Drive chain	Type	RK525GSH	—
	Links	116 links	—
Drive chain 20-pitch length		—	319.4 mm (12.57 in)
Drive chain slack	On side-stand	20 – 30 mm (0.79 – 1.18 in)	—

Brake Control System and Diagnosis

Item	Specification	Standard	Limit
Rear brake pedal height		50 – 60 mm (2.0 – 2.3 in)	—
Master cylinder bore / piston diameter	Front	Approx. 19.1 mm (0.752 in)	—
	Rear	Approx. 14.0 mm (0.551 in)	

Front Brakes

Item	Specification	Standard	Limit
Front brake disc thickness		5.0 mm (0.20 in)	4.5 mm (0.18 in)
Front brake disc runout		—	0.30 mm (0.012 in)
Front brake caliper cylinder bore / piston diameter		Approx. 32 mm (1.3 in)	—

Rear Brakes

Item	Specification	Standard	Limit
Rear brake disc thickness		5.0 mm (0.20 in)	4.5 mm (0.18 in)
Rear brake disc runout		—	0.30 mm (0.012 in)
Rear brake caliper cylinder bore / piston diameter		Approx. 38.2 mm (1.50 in)	—

ABS

Item	Specification	Standard	Limit
Wheel speed sensor – sensor rotor clearance	Front	0.38 – 1.05 mm (0.0150 – 0.0413 in)	—
	Rear	0.42 – 1.08 mm (0.0166 – 0.0425 in)	—

Manual Transmission

Item	Specification	Standard	Limit
Gearshift fork to groove clearance	No.1	0.1 – 0.3 mm (0.004 – 0.011 in)	0.5 mm (0.019 in)
	No.3	0.1 – 0.3 mm (0.004 – 0.011 in)	0.5 mm (0.019 in)
Gearshift fork groove width	No.1	5.0 – 5.1 mm (0.197 – 0.200 in)	—
	No.3	5.0 – 5.1 mm (0.197 – 0.200 in)	
Gearshift fork thickness	No.1	4.8 – 4.9 mm (0.189 – 0.192 in)	—
	No.3	4.8 – 4.9 mm (0.189 – 0.192 in)	
Gearshift lever height		45 – 55 mm (1.8 – 2.1 in)	—
GP switch power supply voltage		4.5 – 5.5 V	—
GP switch voltage	From 1st to Top	0.6 V or more	—

Clutch

Item	Specification	Standard	Limit
Clutch lever play		10 – 15 mm (0.4 – 0.6 in)	—
Clutch release screw		1/2 turn counterclockwise	—
Drive plate thickness		2.72 – 2.88 mm (0.107 – 0.113 in)	2.42 mm (0.0953 in)
Drive plate claw width		13.85 – 13.96 mm (0.5453 – 0.5496 in)	13.35 mm (0.5256 in)
Driven plate distortion		—	0.10 mm (0.0039 in)

Clutch spring free length		66.7 mm (2.63 in)	63.4 mm (2.50 in)

Steering / Handlebar

Item	Specification	Standard	Limit
Steering tension initial force		2 – 5 N (0.21 – 0.50 kgf, 0.50 – 1.12 lbf)	—

Wiring Systems

Item	Specification		Standard	Limit
Fuse size	Headlight	HI	10 A	—
		LO	10 A	—
	Ignition		10 A	—
	Signal		10 A	—
	Fuel		10 A	—
	Fan		15 A	—
	Main		30 A	—
	ABS motor (If equipped)		20 A	—
	ABS valve (If equipped)		15 A	—

Lighting Systems

Item	Specification		Standard	Limit
Headlight	GSX-S1000/A		12 V 60/55 W (H4)	—
	GSX-S1000F/FA	HI	12 V 55 W (H7)	—
		LO	12 V 55 W (H7)	—
Position light (If equipped)			LED	—
Brake light/Taillight			LED	—
Turn signal light			12 V 21 W × 4	—
License plate light			12 V 5 W	—

Combination Meter / Fuel Meter / Horn

Item	Specification	Standard	Limit
Speed sensor power supply voltage (Without ABS)	Front	Battery voltage	—
	Rear	Battery voltage	—
Instrument panel light		LED	—
Turn signal indicator light		LED × 2	—
High beam indicator light		LED	—
Neutral indicator light		LED	—
Oil pressure indicator light/Engine coolant temp. indicator light		LED	—
MIL		LED	—
Traction control system indicator light		LED	—
ABS indicator light (If equipped)		LED	—
Immobilizer indicator light (If equipped)		LED	—

Fasteners Information

Metric Fasteners

Most of the fasteners used for this vehicle are JIS-defined and ISO-defined metric fasteners. When replacing any fasteners, it is most important that replacement fasteners are of the correct diameter, thread pitch and strength.

NOTICE:

Combining male and female fasteners with different thread pitches will damage both fasteners.

It is important to note that, even when the nominal diameter (1) of the threads is the same, JIS-defined and ISO-defined fasteners may be different in thread pitch (2) or width across flats (3). Refer to the following table for these differences.

Before installing a fastener, check it for correct thread pitch and then, screw it in or on the mating fastener by hand. If the fastener is too tight to turn by hand, its thread pitch may be different from that of the mating fastener.

JIS-TO-ISO main fasteners comparison table

		Nominal diameter				
		M6	M8	M10	M12	M14
JIS	Thread pitch	1.0	1.25	1.25	1.25	1.5
	Width across flats	10	12	14	17	19
ISO	Thread pitch	1.0	1.25	1.5	1.5	1.5
	Width across flats	10	13	16	18	21

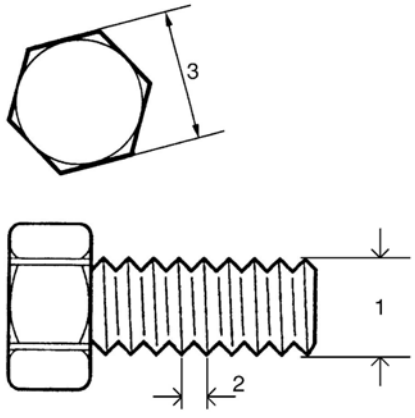

Fastener Strength Identification

Most commonly used strength classes of metric fasteners are 4T, 6.8, 7T and 8.8. Strength class is indicated by a number or radial line(s) embossed on the head of each bolt. Some metric nuts have a punched number, 6 or 8 on their end surfaces. Figure shows different strength markings.

When replacing metric fasteners, use bolts and nuts of the same strength class as or higher class than the original bolts and nuts. It is also important to select replacement fasteners of the correct diameter and thread pitch. Correct replacement bolts and nuts are available as SUZUKI spare parts.

Metric bolts and nuts: Strength class numbers or marks (The larger the number, the greater the strength).

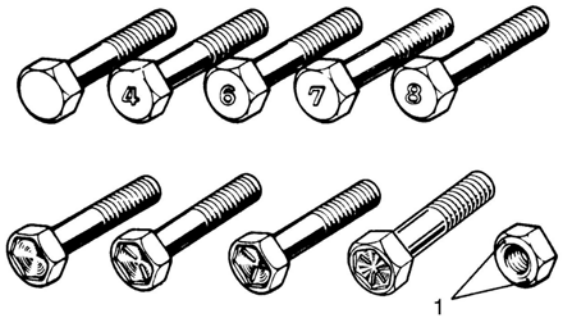

1.	Nut strength identification

Standard Tightening Torques

Each fastener should be tightened to the torque specified in each section. If no torque description or specification is provided in the relevant section, refer to the following tightening torque chart for the applicable torque for each fastener. When a fastener of greater strength than the original one is used, use the torque specified for the original fastener.

NOTE:

- **For flanged bolts, flanged nuts and self-locking nuts of the 4T and 7T strength classes, add 10 % to the applicable tightening torques given in the following chart.**
- **The following chart is applicable only where the fastened parts are made of steel or light alloy.**

Tightening torque chart

Strength	Unit	Thread diameter (Nominal diameter) (mm)								
		4	5	6	8	10	12	14	16	18
Fastener of strength class equivalent to 4T	N·m	1.5	3.0	5.5	13	29	45	65	105	160
	kgf-m	0.15	0.31	0.56	1.3	3.0	4.6	6.6	10.7	16.3
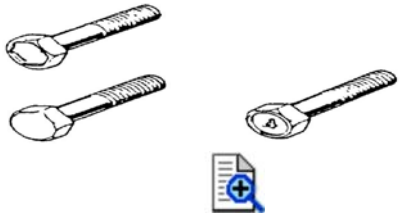	lbf-ft	1.5	2.5	4.0	9.5	21.5	33.5	48.0	77.5	118.0
Fastener of strength class	N·m	2.4	4.7	8.4	20	42	80	125	193	280

equivalent to 6.8	kgf-m	0.24	0.48	0.86	2.0	4.3	8.2	12.7	19.7	28.6
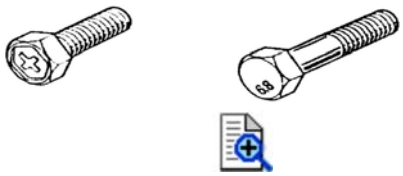	lbf-ft	2.0	3.5	6.5	15.0	31.0	59.0	92.5	142.5	206.5
Flanged fastener of strength class equivalent to 6.8 *: Self-locking nut (6 strength)	N·m	2.4	4.9	8.8	21	44	84	133	203	298
	kgf-m	0.24	0.50	0.90	2.1	4.5	8.6	13.6	20.7	30.4
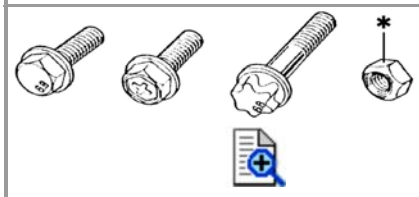	lbf-ft	2.0	4.0	6.5	15.5	32.5	62.0	98.5	150.0	220.0
Fastener of strength class equivalent to 7T	N·m	2.3	4.5	10	23	50	85	135	210	240
	kgf-m	0.23	0.46	1.0	2.3	5.1	8.7	13.8	21.4	24.5
	lbf-ft	2.0	3.5	7.5	17.0	37.0	63.0	99.5	155.0	177.0
Fastener of strength class equivalent to 8.8 (bolt) or 8 (nut)	N·m	3.1	6.3	11	27	56	105	168	258	373
	kgf-m	0.32	0.64	1.1	2.8	5.7	10.7	17.1	26.3	38
	lbf-ft	2.5	5.0	8.5	20.0	41.5	77.5	124.0	190.5	275.5
Flanged fastener of strength class equivalent to 8.8 (bolt) or 8 (nut)	N·m	3.2	6.5	12	29	59	113	175	270	395
	kgf-m	0.33	0.66	1.2	3.0	6.0	11.5	17.8	27.5	40.3
	lbf-ft	2.5	5.0	9.0	21.5	43.5	83.5	129.0	199.5	291.5

Small crown shape bolt	Width across flats "b" [mm]	Thread diameter "a" [mm]	Unit		
			N·m	kgf-m	lbf-ft
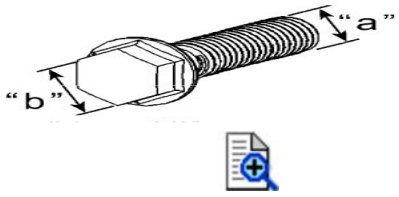	7	5	4.5	0.46	3.5
	8	6	10	1.0	7.5

*: Self-locking nut

Special Tool

NOTE:
Torx® is the registered trademark of Camcar Division of Textron inc. U.S.A.

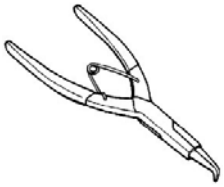 **09900–06104** Snap ring pliers (External: Bent nose)	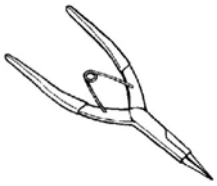 **09900–06107** Snap ring pliers (External)	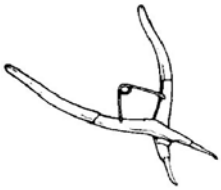 **09900–06108** Snap ring pliers (Internal)	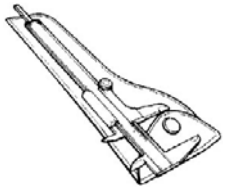 **09900–20102** Vernier calipers (200 mm)	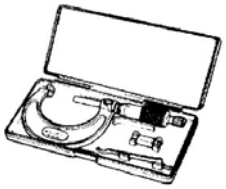 **09900–20202** Micrometer (25 - 50 mm)
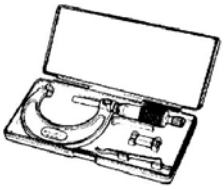 **09900–20203** Micrometer (50 - 75 mm)	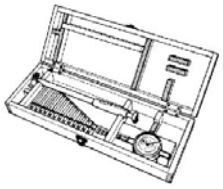 **09900–20530** Cylinder gauge set	 **09900–20602** Dial gauge (1 x 0.001 mm)	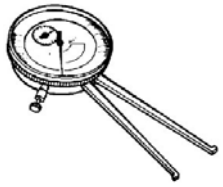 **09900–20605** Dial calipers (10 - 34 mm)	 **09900–20607** Dial gauge (10 x 0.01 mm)
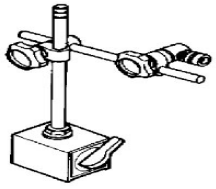 **09900–20701** Dial gauge chuck	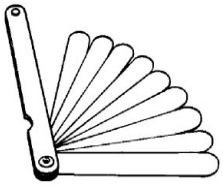 **09900–20803** Thickness gauge	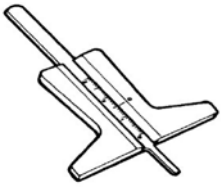 **09900–20805** Tire depth gauge	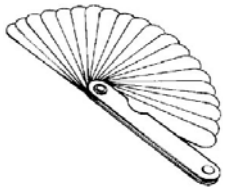 **09900–20806** Thickness gauge	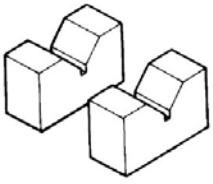 **09900–21304** V blocks
 **09900–22301** Plastigage (0.025 - 0.076 mm)	 **09900–22302** Plastigage (0.051 - 0.152 mm)	 **09900–22401** Small bore gauge (10 - 18 mm)	 **09900–22403** Small bore gauge (18 - 35 mm)	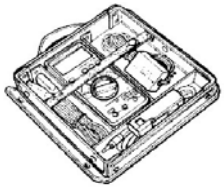 **09900–25008** Multi circuit tester set
	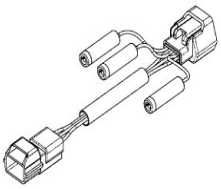	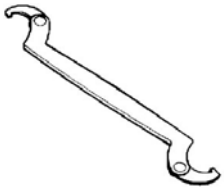	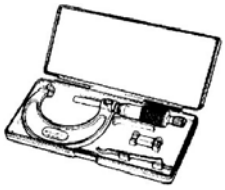	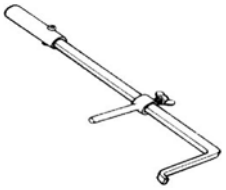

09900–25009 Needle point probe set	**09900–28631** TP Sensor test lead	**09910–60611** Adjustable hook wrench	**09912–66310** Micrometer (0 - 25 mm)	**09913–50121** Oil seal remover
 **09913–70210** Bearing installer set	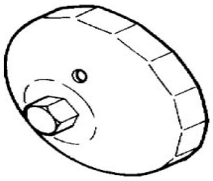 **09915–40620** Oil filter wrench	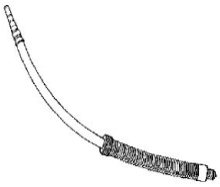 **09915–63311** Compression gauge adapter	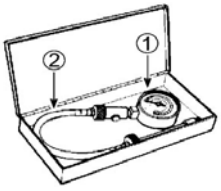 **09915–64512** Compression gauge set (2500 kPa)	 **09915–74521** Oil pressure gauge hose
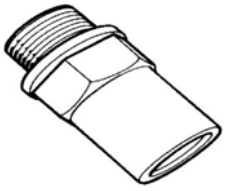 **09915–74540** Oil pressure gauge attachment	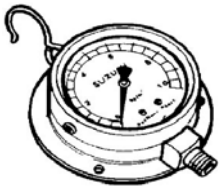 **09915–77331** Oil pressure gauge (1000 kpa)	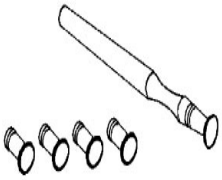 **09916–10911** Valve lapper set	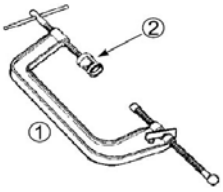 **09916–14510** Valve lifter	 **09916–14522** Valve lifter attachment
 **09916–33210** Valve guide reamer (ø4.5)	 **09916–33320** Valve guide outer reamer (ø9.8)	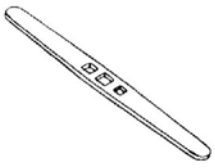 **09916–34542** Reamer handle	 **09916–43211** Valve guide installer / remover	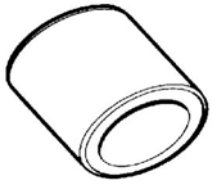 **09916–53380** Valve guide installer attachment
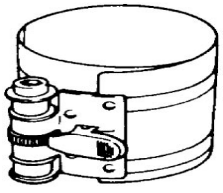 **09916–77310** Piston ring compressor	 **09916–84511** Tweezers	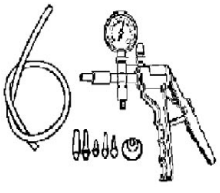 **09917–47011** Vacuum pump gauge set	 **09918–78211** Radiator cap tester kit	 **09918–78220** Radiator cap tester adapter
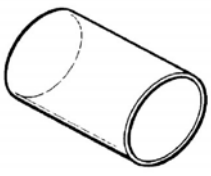	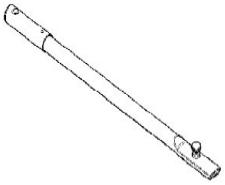	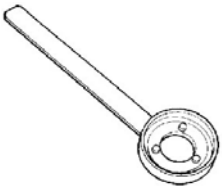		

09919–28620 Sleeve protector	**09920–31020** Extension handle	**09920–34830** Starter clutch rotor holder	**09920–53740** Clutch sleeve hub holder	**09921–20210** Bearing remover (ø12)
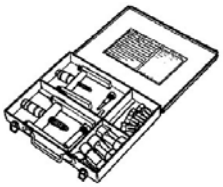 **09921–20240** Bearing remover set	**09922–22712** Drive chain cut / rivet tool set	 **09923–74511** Bearing remover (ø20 - 35)	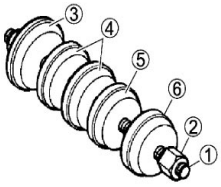 **09924–84510** Bearing installer set	 **09924–84521** Bearing installer set
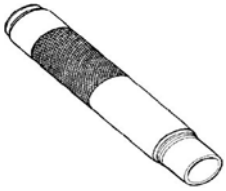 **09925–18011** Bearing installer	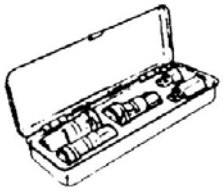 **09930–10121** Spark plug socket set	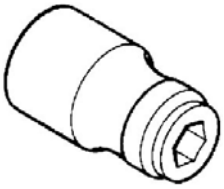 **09930–11940** Torx® bit holder (3/8 sq.)	 **09930–11950** Torx® wrench (T25H)	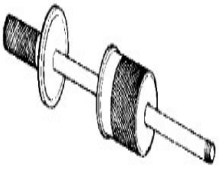 **09930–30104** Rotor remover sliding shaft
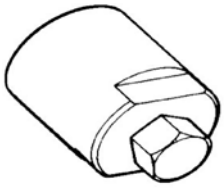 **09930–34980** Rotor remover	 **09930–44521** Rotor holder	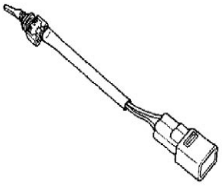 **09930–82720** Mode selection switch	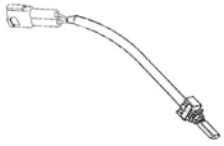 **09930–82760** Mode selection switch	 **09940–14911** Steering stem nut socket
 **09940–14940** Swingarm pivot adjuster wrench	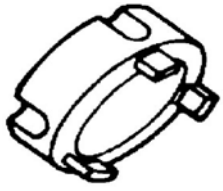 **09940–14960** Steering stem nut socket wrench	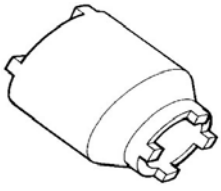 **09940–14990** Engine mounting adjuster wrench	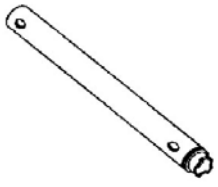 **09940–30221** Front fork cylinder holder	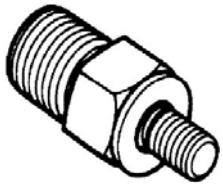 **09940–40211** Fuel pressure gauge adapter
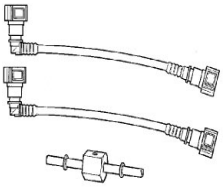	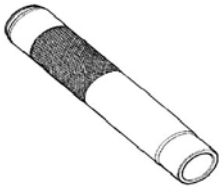	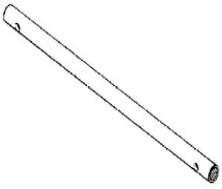	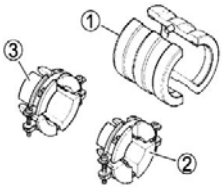	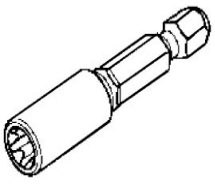

09940–40220 Fuel pressure gauge attachment	**09940–51710** Bearing installer	**09940–52841** Front fork inner rod holder	**09940–52861** Front fork oil seal installer set	**09940–63110** Torx® bit (E8)
 **09940–93110** Fork spring compressor	 **09940–94922** Front fork spring stopper plate	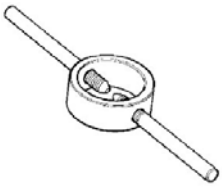 **09940–94930** Front fork spacer holder	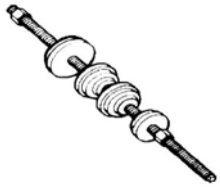 **09941–34513** Bearing installer set	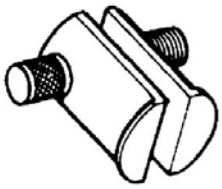 **09941–54911** Bearing outer race remover
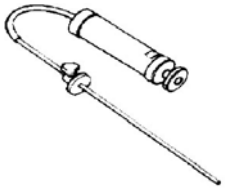 **09943–74111** Front fork oil level gauge	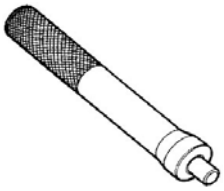 **09943–88211** Pinion bearing installer	 **09944–28321** Hexagon bit socket (19 mm : 1/2 sq.)		

Fuel / Oil / Fluid / Coolant Recommendation

Fuel

NOTICE:
Do not use leaded gasoline. If it is used, the engine and the emission control system will be damaged.

For U.S.A. and Canada

Use unleaded gasoline with an octane rating of 90 AKI or higher.
Unleaded gasoline containing up to 15% MTBE by volume may be used.
Unleaded gasoline containing up to 10% ethanol by volume may be used.
Unleaded gasoline containing up to 5% methanol by volume may be used if it contains appropriate co-solvents and corrosion inhibitors.

For other countries

Use unleaded gasoline with an octane rating of 95 RON or higher.

Engine Oil

Use engine oils which meet the following requirements.

	Engine oil
API service classification	SG, SH, SJ or SL
JASO T903 standard	MA
Viscosity	SAE 10W-40

If SAE 10W-40 engine oils are not available, select oils of an appropriate viscosity grade according to the following chart.

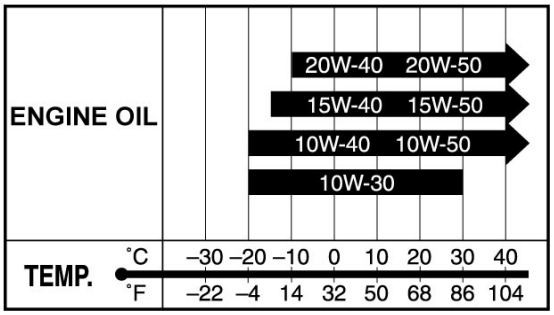

Suzuki does not recommend the use of engine oils which have an “ENERGY CONSERVING” or “RESOURCE CONSERVING” indication in the API service symbol for any of its motorcycles / ATVs. They can affect the engine life and the clutch performance.



For U.S.A. and Canada

Suzuki recommends the use of SUZUKI PERFORMANCE 4 MOTOR OIL.

Brake Fluid

Specification and classification: DOT 4

⚠WARNING:
Since the brake system of this motorcycle is filled with a glycol-based brake fluid by the manufacturer, do not use or mix different types of fluid such as silicone-based and petroleum-based fluid for refilling the system, otherwise serious damage will result.
Do not use any brake fluid taken from old or used or unsealed containers.
Never reuse brake fluid left over from a previous servicing, which has been stored for a long period.

Engine Coolant

Suzuki recommends the use of SUZUKI LONG LIFE COOLANT or SUZUKI SUPER LONG LIFE COOLANT.

Coolant 99000–99032–12X (SUZUKI LONG LIFE COOLANT (GREEN))
Coolant 99000–99032–20X (SUZUKI SUPER LONG LIFE COOLANT (BLUE))

If SUZUKI COOLANT is not available, use an anti-freeze/engine coolant compatible with an aluminum radiator, mixed with distilled water only.

For SUZUKI LONG LIFE COOLANT

NOTICE:
- **Use a high quality ethylene glycol base anti-freeze, mixed with distilled water. Do not mix an alcohol base anti-freeze and different brands of anti-freeze.**
- **Do not put in more than 60% anti-freeze or less than 50%. (Refer to Fig. 1 and 2.)**

The 50:50 mixture of distilled water and ethylene glycol anti-freeze will provide the optimum corrosion protection and excellent heat protection, and will protect the cooling system from freezing at temperatures above –31 °C (–24 °F).
If the vehicle is to be exposed to temperatures below –31 °C (–24 °F), this mixing ratio should be increased up to 55% or 60% according to the figure.

Anti-freeze Proportioning Chart

Anti-freeze density	Freezing point
50%	–31 °C (–24 °F)
55%	–40 °C (–40 °F)
60%	–55 °C (–67 °F)

Fig.1: Engine coolant density-freezing point curve

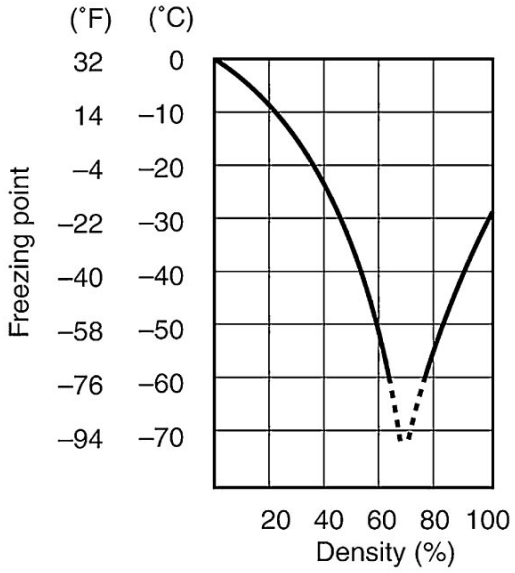

Fig.2: Engine coolant density-boiling point curve

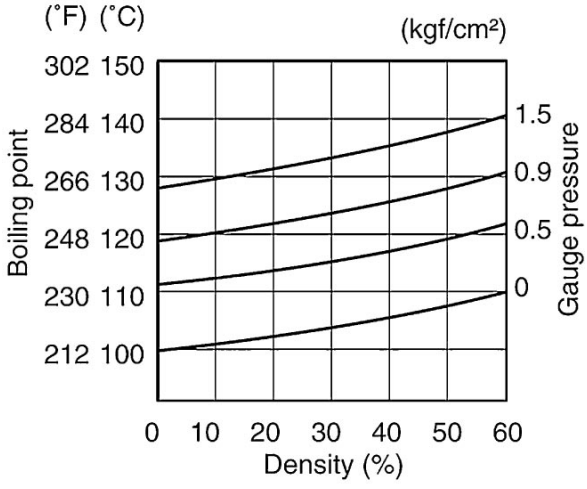

For SUZUKI SUPER LONG LIFE COOLANT

NOTICE:

- **Ethanol or methanol base coolant or water alone should not be used in cooling system at any time as damage to cooling system could occur.**
- **Do not mix the distilled water, SUZUKI LONG LIFE COOLANT (coolant color: Green) or equivalent.**

SUZUKI SUPER LONG LIFE COOLANT will provide the optimum corrosion protection and excellent heat protection, and will protect the cooling system from freezing at temperatures above –36 °C (–33 °F).

Anti-freeze concentration table

Anti-freeze density	Freezing point

50 %	–36 °C (–33 °F)

Water for mixing

Use distilled water only. Water other than distilled water can corrode and clog the aluminum radiator. For engine coolant mixture information, refer to ***Engine Coolant***.

NOTICE:
Mixing of anti-freeze / engine coolant should be limited to 60 %. Mixing beyond it would reduce its efficiency. If the anti-freeze / engine coolant mixing ratio is below 50 %, rust inhabiting performance is greatly reduced. Be sure to mix it above 50 % even though the atmospheric temperature does not go down to the freezing point.

Anti-freeze / Engine coolant

The engine coolant perform as a corrosion and rust inhibitor as well as anti-freeze. Therefore, the engine coolant should be used at all times even though the atmospheric temperature in your area does not go down to freezing point.
Suzuki recommends the use of SUZUKI COOLANT anti-freeze/engine coolant. If this is not available, use an equivalent which is compatible with an aluminum radiator.

Front Fork Oil

Use SUZUKI FORK OIL L-01.

Fork oil 99000–99044–L01 (SUZUKI FORK OIL L-01)

Precautions for Identification of Cylinder

The cylinders of this engine are identified as #1, 2, 3 and #4 cylinder, as counted from left to right (as viewed by the rider on the seat).

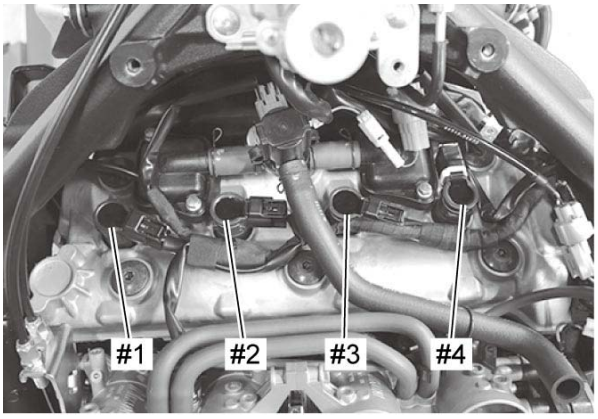

Engine Symptom Diagnosis

Condition	Possible Cause	Action
Engine will not start or is hard to start (Compression too low)	Valve clearance out of adjustment.	*Adjust.* ☞
	Worn valve guides or poor seating of valves.	*Repair or replace.* ☞
	Mistimed valves.	*Adjust.* ☞
	Excessively worn piston rings.	*Replace.* ☞
	Worn down cylinder bores.	*Replace.* ☞ ☞
	Too slow starter motor cranking.	*Repair or replace.* ☞
	Poor seating of spark plugs.	*Retighten.* ☞ ☞
Engine will not start or is hard to start (Plug not sparking)	Defective spark plugs.	*Replace.* ☞
	Too wide spark plug gap.	*Replace.* ☞
	Fouled spark plugs.	*Replace.* ☞
	Wet spark plugs.	*Dry or replace.* ☞
	Defective ignition coils.	*Replace.* ☞
	Defective CKP sensor.	*Replace.* ☞
	Defective ECM.	*Replace.* ☞
	Open-circuited wiring connections.	*Repair or replace.* ☞
Engine will not start or is hard to start (No fuel reaching the intake port)	Clogged fuel filter or fuel hose.	*Clean or replace.* • *Fuel filter:* ☞ • *Fuel hose:* ☞
	Defective fuel pump.	*Replace.* ☞
	Defective fuel pump relay.	*Replace.* ☞
	Defective fuel pressure regulator.	*Replace.* ☞
	Defective fuel injectors.	*Replace.* ☞
	Defective ECM.	*Replace.* ☞
	Open-circuited wiring connections.	*Repair and replace.* ☞
Engine will not start or is hard to start (Incorrect fuel/air mixture)	TP sensor out of adjustment.	*Adjust.* ☞
	Defective fuel pump.	*Replace.* ☞
	Defective fuel pressure regulator.	*Replace.* ☞
	Defective TP sensor.	*Replace.* ☞
	Defective CKP sensor.	*Replace.* ☞
	Defective IAP sensor.	*Replace.* ☞
	Defective ECM.	*Replace.* ☞

	Defective ECT sensor.	*Replace.* ☞
	Defective IAT sensor.	*Replace.* ☞
	Defective AP sensor.	*Replace.* ☞
	Clogged ISC valve air passage way.	*Repair or replace.* ☞
Engine idles poorly	Valve clearance out of adjustment.	*Adjust.* ☞
	Poor seating of valves.	*Repair.* ☞
	Defective valve guides.	*Replace.* ☞
	Worn down camshafts and/or camshafts surface.	*Replace.* ☞ ☞
	Too wide spark plug gap.	*Replace.* ☞
	Defective ignition coils.	*Replace.* ☞
	Defective CKP sensor.	*Replace.* ☞ ☞
	Defective ECM.	*Replace.* ☞
	Defective TP sensor.	*Replace.* ☞
	Defective fuel pump.	*Replace.* ☞
	Imbalanced throttle valves.	*Adjust.* ☞
	Damaged or cracked vacuum hose.	*Replace.*
	Damaged or clogged ISC valve.	*Clean or replace.* ☞
	Dirty throttle body.	*Clean.* ☞
	ISC incorrect leaning.	*Reset learned value.* ☞
Engine stalls often (Incorrect fuel/air mixture)	Defective IAP sensor or circuit.	*Repair or replace.* ☞
	Clogged fuel filter.	*Clean or replace.* ☞
	Defective fuel pump.	*Replace.* ☞
	Defective fuel pressure regulator.	*Replace.* ☞
	Defective ECT sensor.	*Replace.* ☞
	Defective thermostat.	*Replace.* ☞
	Defective IAT sensor.	*Replace.* ☞
	Damaged or cracked vacuum hose.	*Replace.*
	Damaged or clogged ISC valve.	*Clean or replace.* ☞
Engine stalls often (Fuel injector improperly operating)	Defective fuel injectors.	*Replace.* ☞
	No injection signal from ECM.	*Repair or replace.* ☞ ☞ ☞ ☞
	Open or short circuited wiring connections.	*Repair or replace.* ☞ ☞ ☞

		☞
	Defective battery or low battery voltage.	*Replace or recharge.* ☞
Engine stalls often (Control circuit or sensor improperly operating)	Defective ECM.	*Replace.* ☞
	Defective fuel pressure regulator.	*Replace.* ☞
	Defective TP sensor.	*Replace.* ☞
	Defective IAT sensor.	*Replace.* ☞
	Defective CKP sensor.	*Replace.* ☞
	Defective ECT sensor.	*Replace.* ☞
	Defective fuel pump relay.	*Replace.* ☞
	Defective ISC valve.	*Replace.* ☞
	ISC incorrect learning.	*Reset learned value.* ☞
Engine stalls often (Engine internal parts improperly operating)	Fouled spark plugs.	*Replace.* ☞
	Defective CKP sensor.	*Replace.* ☞
	Defective ECM.	*Replace.* ☞
	Clogged fuel hose.	*Clean or replace.* ☞
	Valve clearance out of adjustment.	*Adjust.* ☞
	Dirty throttle body.	*Clean.* ☞
Noisy engine (Excessive valve chatter)	Too large valve clearance.	*Adjust.* ☞
	Weakened or broken valve springs.	*Replace.* ☞
	Worn tappet or camshafts surface.	*Replace.* ☞ ☞
	Worn or burnt camshaft journals.	*Replace.* ☞ ☞
Noisy engine (Noise seems to come from piston)	Worn down pistons.	*Replace.* ☞ ☞
	Worn down cylinders.	*Replace.* ☞ ☞
	Combustion chamber fouled with carbon.	*Clean.* ☞
	Worn piston pins or piston pins bore.	*Replace.* ☞ ☞
	Worn piston rings or ring grooves.	*Replace.* ☞
Noisy engine (Noise seems to come from cam chain)	Stretched cam chain.	*Replace.* ☞ ☞
	Worn sprockets.	*Replace.* ☞ ☞
	Cam chain tension adjuster not working.	*Repair or replace.* ☞ ☞

Noisy engine (Noise seems to come from crankshaft)	Rattling bearing due to wear.	*Replace.* ☞
	Worn or burnt conrod crank pin bearings.	*Replace.* ☞
	Worn or burnt journal bearings.	*Replace.* ☞
	Too large thrust clearance.	*Replace thrust bearings.* ☞ ☞
Noisy engine (Noise seems to come from balancer)	Worn or burnt journal bearings.	*Replace.* ☞
Noisy engine (Noise seems to come from water pump)	Worn or damaged impeller shaft.	*Replace.* ☞
	Worn or damaged mechanical seal.	*Replace.* ☞
	Contact between pump case and impeller.	*Replace.* ☞
Engine runs poorly in high speed range (Defective engine internal / electrical parts)	Weakened valve springs.	*Replace.* ☞
	Worn camshafts.	*Replace.* ☞ ☞
	Valve timing out of adjustment.	*Adjust.* ☞
	Too narrow spark plug gap.	*Replace.* ☞
	Ignition not advanced sufficiently due to poorly working timing advance circuit.	*Replace ECM.* ☞
	Defective ignition coils.	*Replace.* ☞
	Defective CKP sensor.	*Replace.* ☞
	Defective ECM.	*Replace.* ☞
	Clogged air cleaner element.	*Replace.* ☞
	Clogged fuel hose, resulting in inadequate fuel supply to injector.	*Clean and prime.*
	Defective fuel pump.	*Replace.* ☞
	Defective TP sensor.	*Replace.* ☞
	Defective STP sensor.	*Replace.* ☞
	Defective STVA.	*Replace.* ☞
Engine runs poorly in high speed range (Defective air flow system)	Clogged air cleaner element.	*Replace.* ☞
	Defective throttle valve.	*Adjust or replace.* ☞
	Defective secondary throttle valve.	*Adjust or replace.* ☞
	Sucking air from throttle body joint or intake pipe joint.	*Retighten or replace.*
	Defective ECM.	*Replace.* ☞
	Unbalancing throttle valve synchronization.	*Adjust.* ☞
	Defective STP sensor.	*Replace.* ☞
	Defective STVA.	*Replace.* ☞
Engine runs poorly in high	Low fuel pressure.	*Repair or replace.*

speed range (Defective control circuit or sensor)	Defective TP sensor.	*Replace.* ☞
	Defective IAT sensor.	*Replace.* ☞
	Defective IAP sensor.	*Replace.* ☞
	Defective CKP sensor.	*Replace.* ☞
	Defective ECM.	*Replace.* ☞
	TP sensor out of adjustment.	*Adjust.* ☞
	Defective STP sensor.	*Replace.* ☞
	Defective STVA.	*Replace.* ☞
	Defective EXCVA.	*Replace.* ☞
Engine lacks power (Defective engine internal / electrical parts)	Loss of valve clearance.	*Adjust.* ☞
	Weakened valve springs.	*Replace.* ☞
	Valve timing out of adjustment.	*Adjust.* ☞
	Worn piston rings or cylinders.	*Replace.* ☞
	Poor seating of valves.	*Repair.* ☞
	Fouled spark plugs.	*Replace.* ☞
	Incorrect spark plugs.	*Replace.* ☞
	Clogged fuel injectors.	*Clean or replace.* ☞
	Clogged air cleaner element.	*Replace.* ☞
	Sucking air from throttle body joint or intake pipe joint.	*Retighten or replace.*
	Too much engine oil.	*Drain out excess oil.*
	Defective fuel pump.	*Replace.* ☞
	Defective ECM.	*Replace.* ☞
	Defective CKP sensor.	*Replace.* ☞
	Defective ignition coils.	*Replace.* ☞
	Defective STP sensor.	*Replace.* ☞
	Defective STVA.	*Replace.* ☞
Engine lacks power (Defective control circuit or sensor)	Low fuel pressure.	*Repair or replace.*
	Defective TP sensor.	*Replace.* ☞
	Defective IAT sensor.	*Replace.* ☞
	Defective CKP sensor.	*Replace.* ☞
	Defective IAP sensor.	*Replace.* ☞
	Defective AP sensor.	*Replace.* ☞
	Defective ECM.	*Replace.* ☞
	TP sensor out of adjustment.	*Adjust.* ☞
	Defective STP sensor.	*Replace.* ☞
	Defective STVA.	*Replace.* ☞

	Defective EXCVA.	*Replace.* ☞
Engine overheats (Defective engine internal parts)	Heavy carbon deposit on piston crown.	*Clean.*
	Not enough oil in the engine.	*Add oil.* ☞
	Defective oil pump or clogged oil circuit.	*Replace or clean.* ☞
	Use of incorrect engine oil.	*Replace.* ☞
	Sucking air from throttle body joint or intake pipe joint.	*Retighten or replace.*
	Defective cooling system.	*Refer to* ***Engine Cooling Symptom Diagnosis****.*
Engine overheats (Lean fuel / air mixture)	Short-circuited IAP sensor/lead wire.	*Repair or replace.* ☞
	Short-circuited IAT sensor/lead wire.	*Repair or replace.* ☞
	Sucking air from throttle body joint or intake pipe joint.	*Retighten or replace.*
	Defective fuel injectors.	*Replace.* ☞
	Defective ECT sensor.	*Replace.* ☞
Engine overheats (Other factors)	Ignition timing is too advanced due to defective timing advance system (ECT sensor, CKP sensor or ECM).	*Replace.*
Dirty or heavy exhaust smoke	Too much engine oil.	*Drain out excess oil.*
	Worn piston rings or cylinders.	*Replace.* ☞
	Worn valve guides.	*Replace.* ☞
	Scored or scuffed cylinder walls.	*Replace.* ☞ ☞
	Worn valve stems.	*Replace.* ☞
	Defective valve stem seal.	*Replace.* ☞
	Worn oil ring side rails.	*Replace.* ☞

Fail-Safe Function Table

FI system is provided with fail-safe function to allow the engine to start and the motorcycle to run in a minimum performance necessary even under malfunction condition.

Item	Fail-Safe Mode	Starting Ability	Running Ability
IAP sensor	Intake air pressure value is fixed to approx. 100 kPa (760 mmHg).	"YES"	"YES"
TP sensor	The throttle opening is fixed to full open position. Ignition timing is also fixed.	"YES"	"YES"
ECT sensor	Engine coolant temperature value is fixed to 80 °C (176 °F). Cooling fan is fixed on position.	"YES"	"YES"
IAT sensor	Intake air temperature value is fixed to 25 °C (77 °F).	"YES"	"YES"
AP sensor	Atmospheric pressure is fixed to approx. 100 kPa (760 mmHg).	"YES"	"YES"
Ignition signal	#1 fuel-cut	"YES"	"YES"
		#2, #3 & #4 cylinders can run.	
	#2 fuel-cut	"YES"	"YES"
		#1, #3 & #4 cylinders can run.	
	#3 fuel-cut	"YES"	"YES"
		#1, #2 & #4 cylinders can run.	
	#4 fuel-cut	"YES"	"YES"
		#1, #2 & #3 cylinders can run.	
STV actuator	Secondary throttle valve is fixed to full close position. When motor disconnection or lock occurs, power from ECM is shut off.	"YES"	"YES"
STP sensor	Secondary throttle valve is fixed to full open position.	"YES"	"YES"
GP signal	Gear position signal is fixed to 6th gear.	"YES"	"YES"
HO2 sensor	Feedback compensation is inhibited. (Air/fuel ratio is fixed to normal.)	"YES"	"YES"
PAIR control solenoid valve	ECM stops controlling PAIR control solenoid valve.	"YES"	"YES"
EXCVA	EXCVA is fixed to full open position. When motor disconnection or lock occurs, power from ECM is shut off.	"YES"	"YES"
ISC valve	When motor disconnection or lock occurs, power from ECM is shut off.	"YES"	"YES"
EVAP system purge control solenoid valve (If equipped)	ECM stops controlling EVAP system purge control solenoid valve.	"YES"	"YES"

The engine can start and can run even if the signal in the table is not received from each sensor. But, the engine running condition is not complete, providing only emergency help (by fail-safe circuit). In this case, it is necessary to bring the motorcycle to the workshop for complete repair.
When two ignition signals or two injector signals are not received by ECM, the fail-safe circuit can not work and ignition or injection is stopped.

FI System Component Location

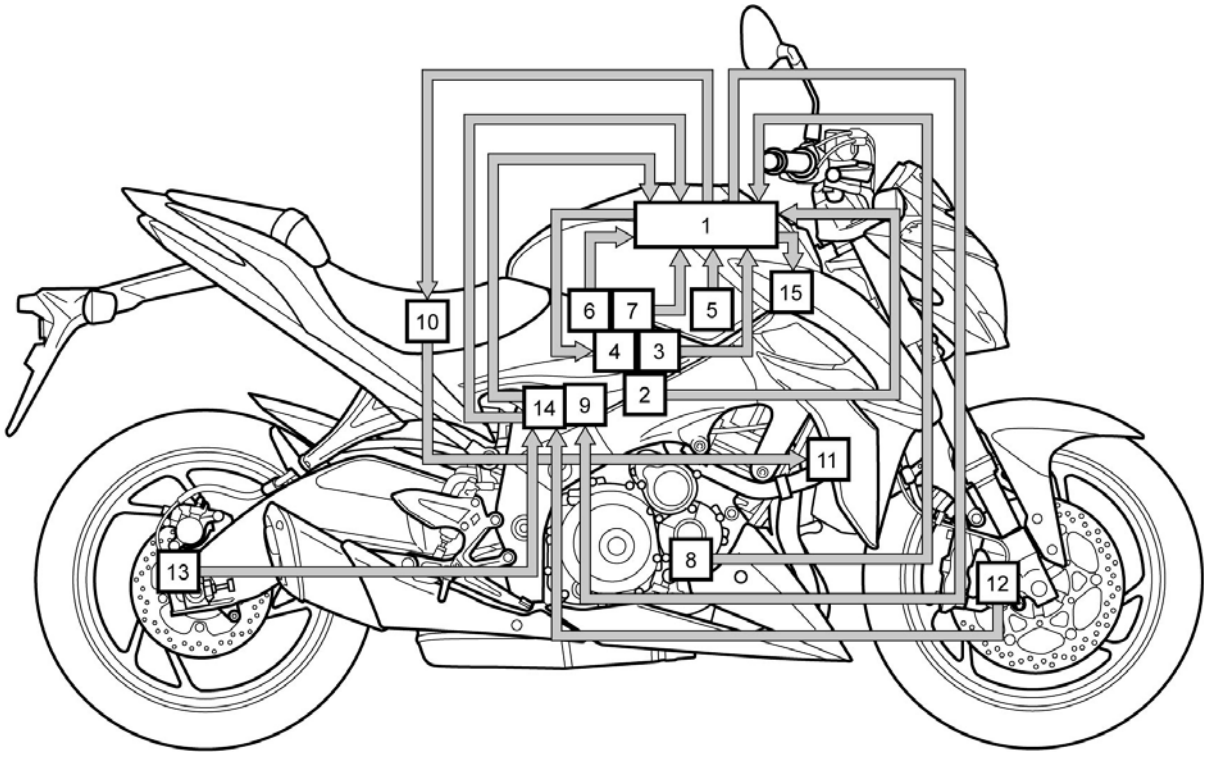

1.	ECM	6.	IAP sensor	11.	Cooling fan
2.	TP sensor	7.	IAT sensor	12.	Front wheel speed sensor
3.	STP sensor	8.	CKP sensor	13.	Rear wheel speed sensor
4.	STVA	9.	EVAP system purge control solenoid valve (If equipped)	14.	ABS control unit (If equipped)
5.	AP sensor	10.	Cooling fan relay	15.	PAIR control solenoid valve

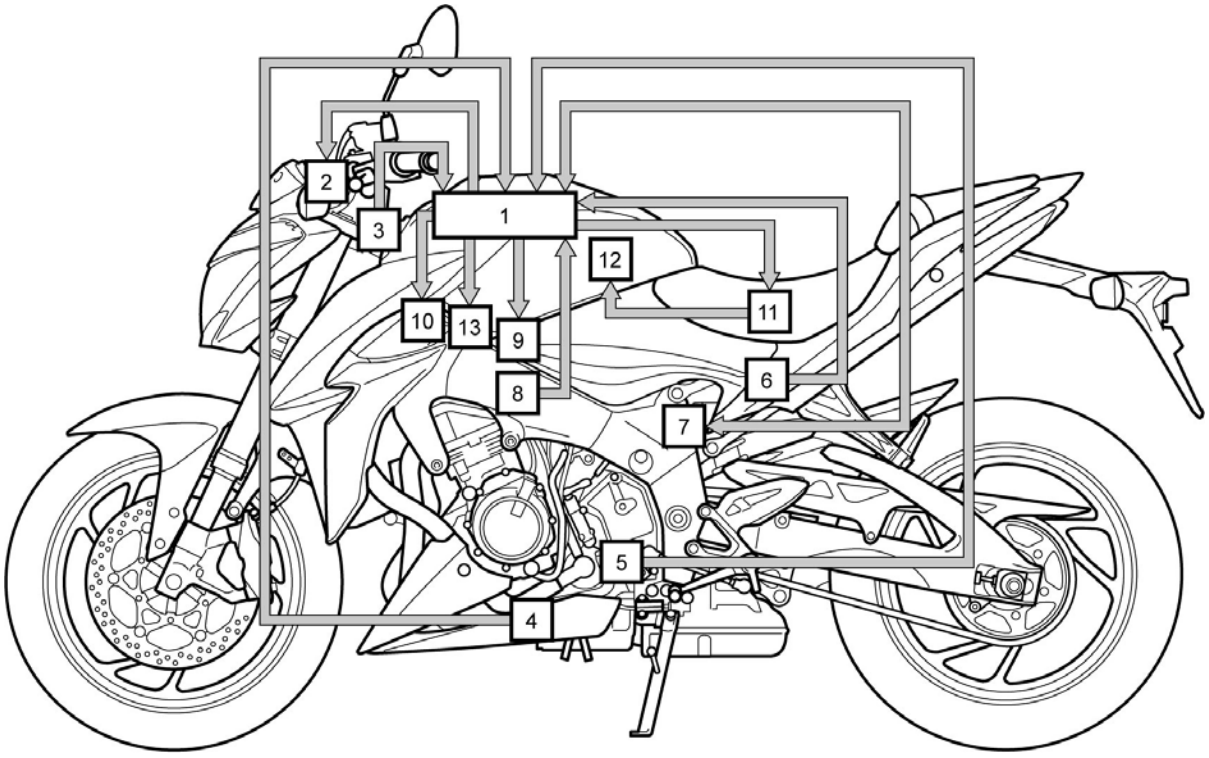

1.	ECM	6.	TO sensor	11.	FP relay
2.	Combination meter	7.	EXCVA / EXCVA position sensor	12.	Fuel pump
3.	Ignition switch/Immobilizer (If equipped)	8.	ECT sensor	13.	ISC valve
4.	HO2 sensor	9.	Fuel injectors		
5.	GP switch	10.	Ignition coils		

FI System Troubleshooting

Customer Complaint Analysis

Record details of the problem (failure, complaint) and how it occurred as described by the customer. For this purpose, use of such an inspection form such as following will facilitate collecting information to the point required for proper analysis and diagnosis.

NOTE:
This form is a standard sample. The form should be modified according to conditions and characteristic of each market.

Visual Inspection

Prior to diagnosis using the mode select switch or SDS, perform the following visual inspections. The reason for visual inspection is that mechanical failures (such as oil leakage) cannot be displayed on the screen with the use of mode select switch or SDS.

Inspection Item		Referring section
Engine oil	Level	☞
	Leakage	
Engine coolant	Level	☞
	Leakage	☞
Fuel	Level	—
	Leakage	☞
Air cleaner element	Dirt	☞
	Clogging	
Battery	Corrosion of terminal	☞
Throttle cable	Play	☞
Vacuum hoses of air intake system	Disconnection	—
	Looseness	—
	Bend	—
Fuses	Burning	—
MIL	Operation	☞
Each indicator light	Operation	☞
Combination meter	Operation	☞
Exhaust system	Leakage of exhaust gas	☞
	Noise	
Harness coupler	Disconnection	☞
	Poor contact	

FI System Wiring Diagram

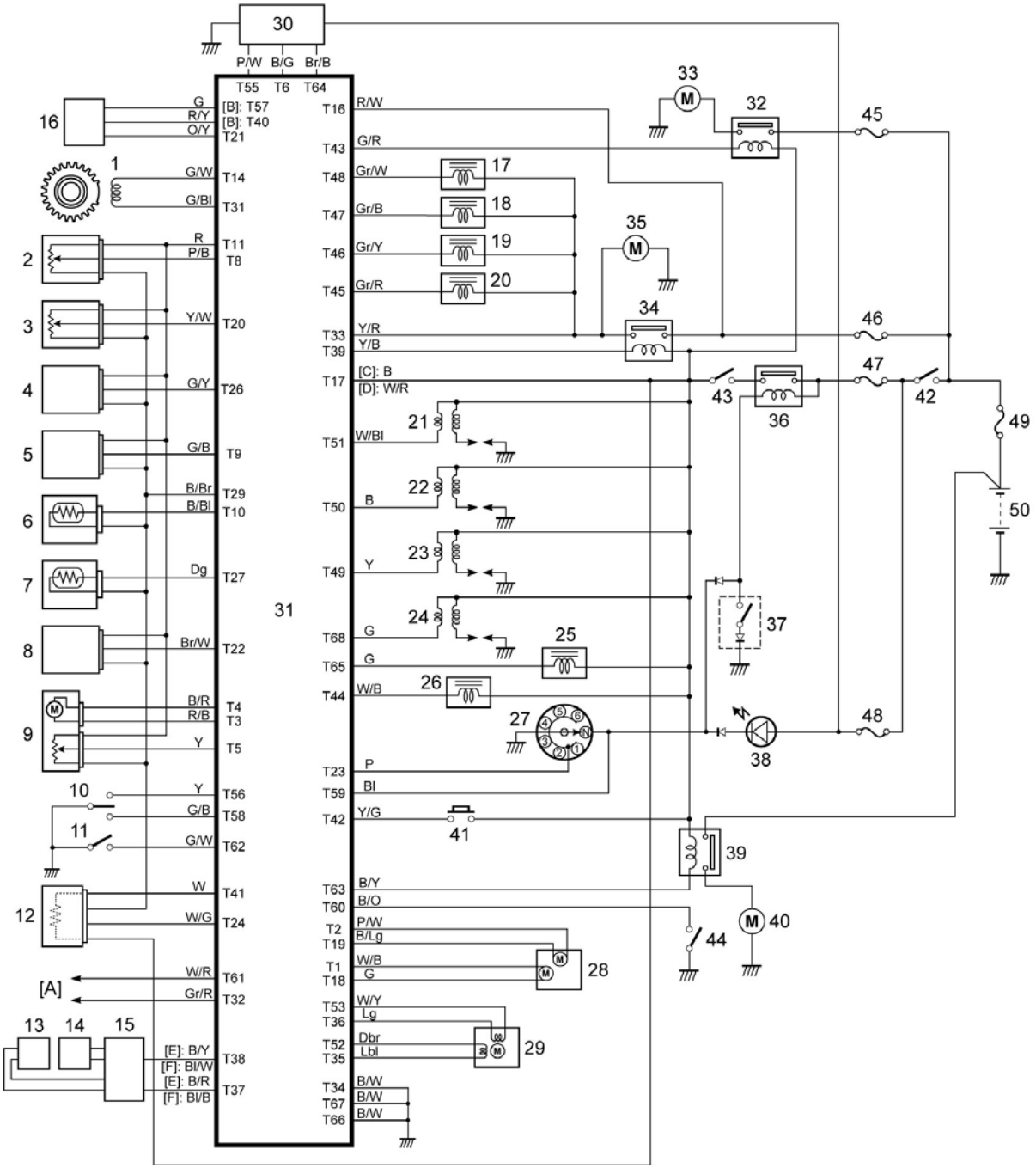

[A]:	To mode select coupler (6P)	9.	EXCVA/EXCVA position sensor	23.	Ignition coil #3	37.	Side-stand switch
[B]:	With immobilizer system	10.	Mode switch	24.	Ignition coil #4	38.	Neutral indicator light (LED)
[C]:	E.U. and Australia	11.	Traction control system switch	25.	EVAP system purge control solenoid valve (If equipped)	39.	Starter relay

[D]:	Except for E.U. and Australia	12.	HO2 sensor	26.	PAIR control solenoid valve	40.	Starter motor
[E]:	Without ABS	13.	Front wheel speed sensor	27.	GP switch	41.	Starter switch
[F]:	With ABS	14.	Rear wheel speed sensor	28.	STV actuator	42.	Ignition switch
1.	CKP sensor	15.	ABS control unit (If equipped)	29.	ISC valve	43.	Engine stop switch
2.	TP sensor	16.	Ignition switch/Immobilizer (If equipped)	30.	Combination meter	44.	Clutch lever position switch
3.	STP sensor	17.	Fuel injector #1	31.	ECM	45.	Fan fuse (15 A)
4.	AP sensor	18.	Fuel injector #2	32.	Cooling fan relay	46.	Fuel fuse (10 A)
5.	IAP sensor	19.	Fuel injector #3	33.	Cooling fan motor	47.	Ignition fuse (10 A)
6.	ECT sensor	20.	Fuel injector #4	34.	Fuel pump relay	48.	Signal fuse (10 A)
7.	IAT sensor	21.	Ignition coil #1	35.	Fuel pump	49.	Main fuse (30 A)
8.	TO sensor	22.	Ignition coil #2	36.	Side-stand relay	50.	Battery

Terminal Arrangement of ECM Connector

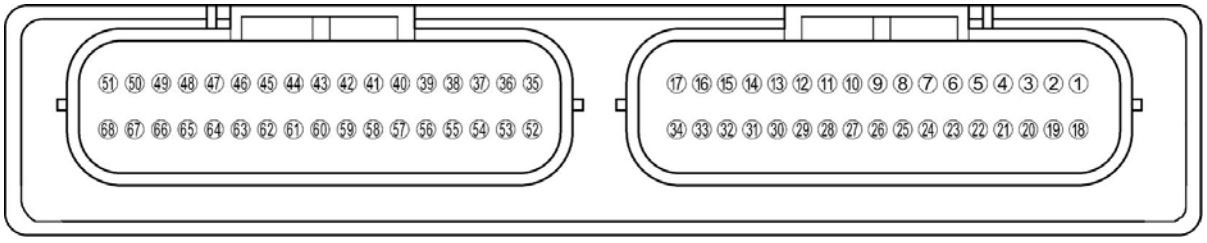

TERMINAL NO.	CIRCUIT	TERMINAL NO.	CIRCUIT
T1	STVA signal (STVA, 2A)	T35	ISC valve signal (ISC, 2B)
T2	STVA signal (STVA, 1A)	T36	ISC valve signal (ISC, 1B)
T3	EXCVA power (–)	T37	Front wheel speed sensor signal
T4	EXCVA power (+)	T38	Rear wheel speed sensor signal
T5	EXCVA position sensor	T39	Fuel pump relay
T6	Serial data for combination meter	T40	Immobilizer communication (If equipped)
T7	—	T41	HO2 sensor heater
T8	TP sensor signal	T42	Starter switch
T9	IAP sensor signal	T43	Cooling fan relay
T10	ECT sensor signal	T44	PAIR control solenoid valve
T11	Power source for sensors	T45	Fuel injector #4
T12	—	T46	Fuel injector #3
T13	—	T47	Fuel injector #2

T14	CKP sensor signal (CKP+)	T48	Fuel injector #1
T15	—	T49	Ignition coil #3
T16	Power source for back-up	T50	Ignition coil #2
T17	Power source	T51	Ignition coil #1
T18	STVA signal (STVA, 2B)	T52	ISC valve signal (ISC, 2A)
T19	STVA signal (STVA, 1B)	T53	ISC valve signal (ISC, 1A)
T20	STP sensor	T54	—
T21	Immobilizer indicator (If equipped) / Ignition signal	T55	Speed sensor output signal
T22	TO sensor signal	T56	Mode switch 1
T23	GP switch signal	T57	Immobilizer communication (If equipped)
T24	HO2 sensor signal	T58	Mode switch 2
T25	—	T59	Neutral signal
T26	AP sensor signal	T60	Clutch lever position switch
T27	IAT sensor signal	T61	Mode select switch
T28	—	T62	Select switch
T29	Sensor ground (E2)	T63	Starter motor relay
T30	—	T64	Tachometer
T31	CKP sensor signal (CKP–)	T65	EVAP system purge control solenoid valve (If equipped)
T32	Serial data for self-diagnosis	T66	General power ground (E01)
T33	Power source for fuel injectors	T67	Ignition system ground (E03)
T34	ECM ground (E1)	T68	Ignition coil #4

Injection Timing Description

Injection Time (Injection Volume)

The factors to determine the injection time include the basic fuel injection time, which is calculated on the basis of the intake air pressure, engine speed and throttle opening angle, and various compensations. These compensations are determined according to the signals from various sensors that detect the engine and driving conditions.

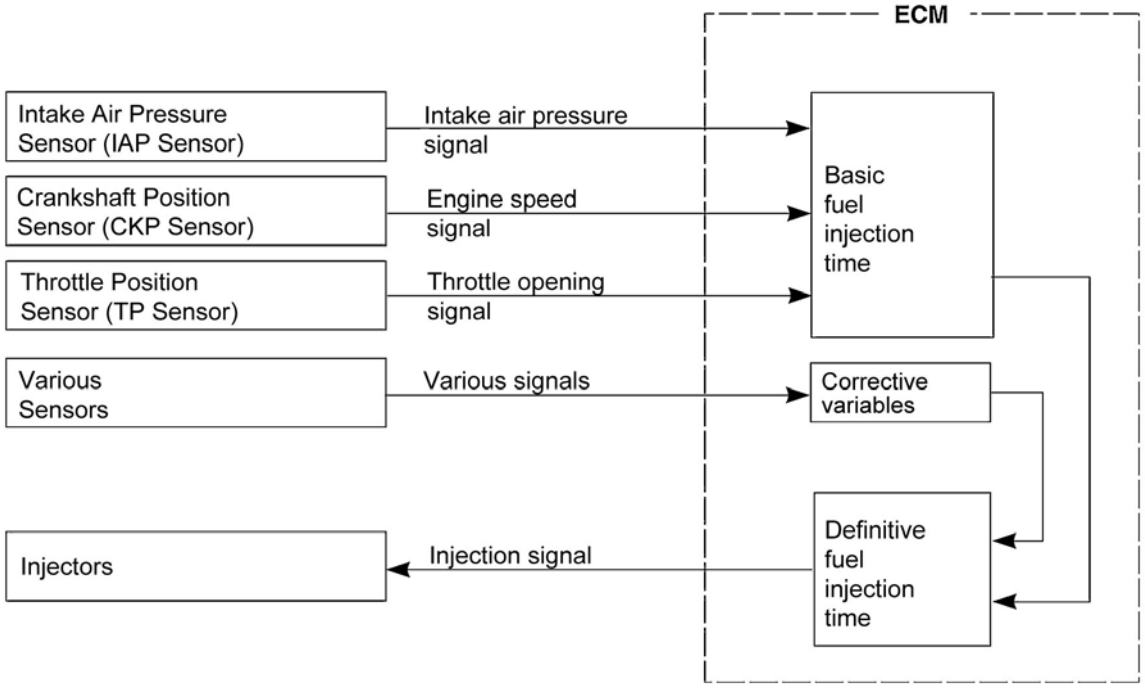

Compensation of Injection Time (Volume)

The following different signals are output from the respective sensors for compensation of the fuel injection time (volume).

Signal	Descriptions
ECT sensor signal	When engine coolant temperature is low, injection time (volume) is increased.
IAT sensor signal	When intake air temperature is low, injection time (volume) is increased.
HO2 sensor signal	Air/fuel ratio is compensated to the theoretical ratio from density of oxygen in exhaust gasses. The compensation occurs in such a way that more fuel is supplied if detected air/fuel ratio is lean and less fuel is supplied if it is rich.
Battery voltage signal	ECM operates on the battery voltage and at the same time, it monitors the voltage signal for compensation of the fuel injection time (volume). A longer injection time is needed to adjust injection volume in the case of low voltage.
Engine rpm signal	At high speed, the injection time (volume) is increased.
Starting signal	When starting engine, additional fuel is injected during cranking engine.

Acceleration signal / deceleration signal	During acceleration, the fuel injection time (volume) is increased, in accordance with the throttle opening speed and engine rpm. During deceleration, the fuel injection time (volume) is decreased.

Injection Stop Control

Signal	Descriptions
TO sensor signal	When the motorcycle tips over, the tip-over sensor sends a signal to the ECM. Then, this signal cuts OFF current supplied to the fuel pump, fuel injectors and ignition coils.
Over-rev. limiter signal	When actual engine speed reaches a programmed maximum, the fuel injection pulses are suppressed.

Self-Diagnosis Function

The self-diagnosis function is incorporated in the ECM. The function has two modes, “User mode” and “Dealer mode”. The user can only be notified by the LCD (DISPLAY) panel and LED (MIL). To check the function of the individual FI system devices, the dealer mode is provided. In this check, the special tool is necessary to read the code of the malfunction items.

User Mode

Malfunction		LCD (display) indication (1)	MIL indication (2)	Indication mode
“NO”		Odometer *1	—	—
“YES”	Engine can start	Odometer (*1) and “FI” letters (*2)	MIL turns ON.	Each 2 sec. Odometer (*1) and “FI” is indicated alternately.
	Engine can not start	“FI” letters (*3)	MIL turns ON and then blinks.	“FI” is indicated continuously.

***1**

Current letter displayed any one of the odometer, tripmeter A, tripmeter B or instrument panel light brightness.

***2**

When one of the signals is not received by ECM, the fail-safe circuit works and injection is not stopped. In this case, “FI” and odometer (*1) are indicated in the LCD panel and motorcycle can run.

***3**

The injection signal is stopped, when the crankshaft position sensor signal, tip-over sensor signal, #1, #2, #3 and #4 ignition signals, #1, #2, #3 and #4 injector signals, fuel pump relay signal or ignition switch signal is not sent to ECM. In this case, “FI” is indicated in the LCD panel. Motorcycle does not run.

“CHEC”:

The LCD panel indicates “CHEC” when no communication signal from the ECM is received for 3 seconds or more.

For Example:

The ignition switch is turned ON, and the engine stop switch is turned OFF. In this case, the combination meter does not receive any signal from the ECM, and the panel indicates “CHEC”.
If CHEC is indicated, the LCD does not indicate the trouble code. It is necessary to check the wiring harness between ECM and combination meter couplers.
The possible cause of this indication is as follows:
Engine stop switch is in OFF position. Starter inter-lock system is not working. Ignition fuse is burnt.

NOTE:
The MIL (2) turns ON about 3 seconds after turning the ignition switch ON.

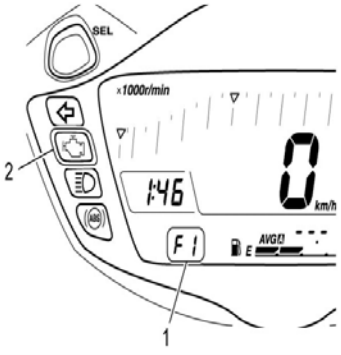

Dealer Mode

The defective function is memorized in the computer. Use the special tool's coupler to connect to the mode select switch. The memorized malfunction code is displayed on LCD (DISPLAY) panel. Malfunction means that the ECM does not receive normal signal from the devices. These affected devices are indicated in the code form.

NOTE:
Before checking the malfunction code, do not disconnect the ECM couplers.
If the couplers from the ECM is disconnected, the malfunction code memory is erased and the malfunction code can not be checked.

Special Tool

(A): 09930–82720

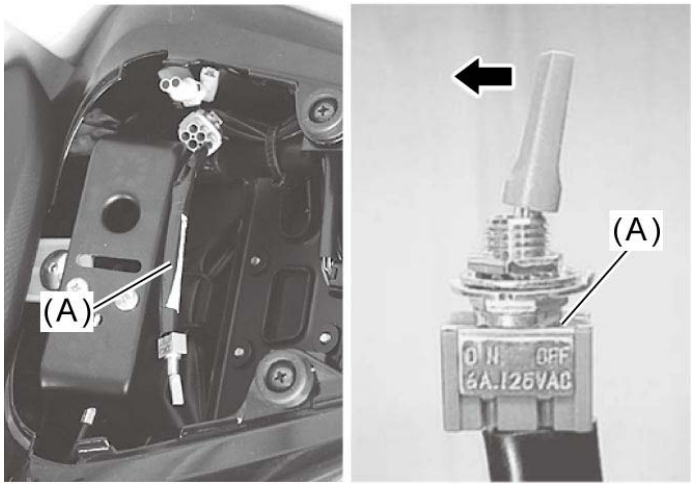

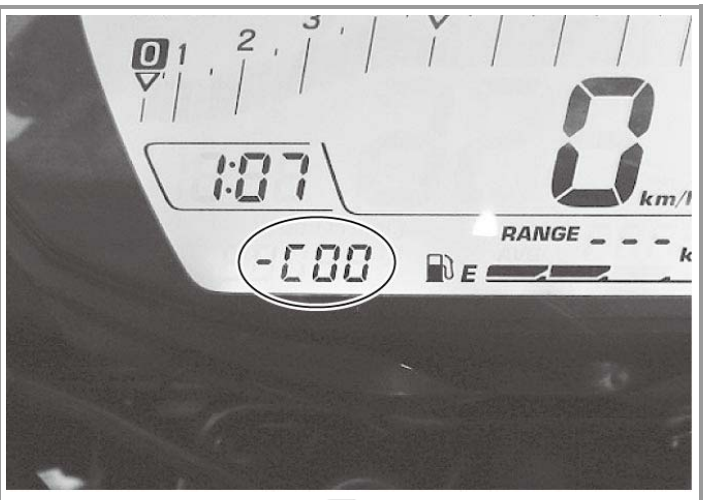

Malfunction	LCD (display) indication	MIL indication	Indication mode
"NO"	C00	MIL turns OFF.	—
"YES"	C** code is indicated from small numeral to large one.		For each 2 sec., code is indicated.

DTC Storage

There are two types of DTC, Current and Past, can be memorized in ECM.

- Current DTC is cleared when the ignition switch is turned OFF, then it is memorized in ECM as a Past DTC.
- Past DTC is not cleared even the ignition switch is turned OFF or the trouble is repaired.

DTC Check

NOTE:

- **Do not disconnect the coupler from ECM, battery cable from battery, ECM ground wire from engine or main fuse before confirming DTC stored in memory. Such disconnection will erase memorized information in ECM memory.**
- **Before checking DTC, read self-diagnosis function "User mode and dealer mode" ☞ carefully to have good understanding as to what functions are available and how to use it.**
- **DTC can be checked by using the SDS. Refer to the SDS operation manual for further details.**

1) Remove the rear seat. ☞

2) Connect the special tool to the mode select coupler (6P) at the wiring harness.

Special Tool

(A): 09930–82720

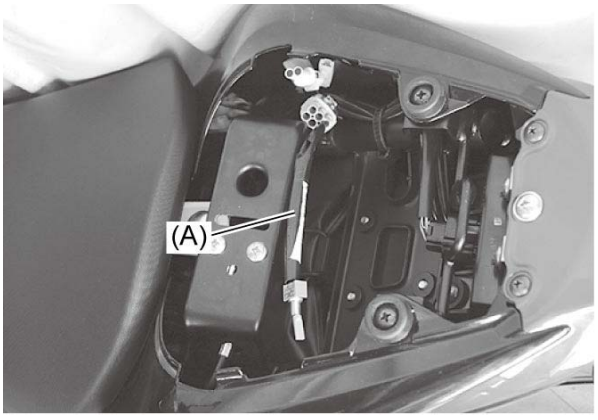

3) Start the engine or crank the engine for more than 4 seconds.

4) Turn the special tool's switch ON.



5) Check the DTC to determine the malfunction part. ☞


1:46
-C21
E

DTC Clearance

NOTE:
- **The malfunction code is memorized in the ECM also when the lead wire coupler of any sensor is disconnected. Therefore, when a lead wire coupler has been disconnected in the diagnosis, erase the stored Past DTC.**
- **Past DTC can be erased by using the SDS. Refer to the SDS operation manual for further details.**

1) Connect the special tool and turn the special tool's switch ON. Refer to ***DTC Check***.

2) After repairing the trouble, turn OFF the ignition switch and turn ON again.

3) If the DTC is indicated (C00), the malfunction is cleared.



4) Disconnect the special tool and install the rear seat.

NOTE:
Even though the Current DTC is cleared, Past DTC (previous malfunction history code) still remains stored in the ECM. Therefore, erase the Past DTC memorized in the ECM.

DTC P0105-H / P0105-L (C13)

DTC Detecting Condition and Trouble Area

DTC detecting condition	Trouble area
P0105-H (C13): IAP Sensor Circuit High Voltage The sensor output voltage is higher than 4.85 V.	• Vacuum passage between throttle body and IAP sensor • IAP sensor • IAP sensor circuit • ECM
P0105-L (C13): IAP Sensor Circuit Low Voltage The sensor output voltage is lower than 0.5 V.	

Wiring Diagram

Refer to ***FI System Wiring Diagram***.

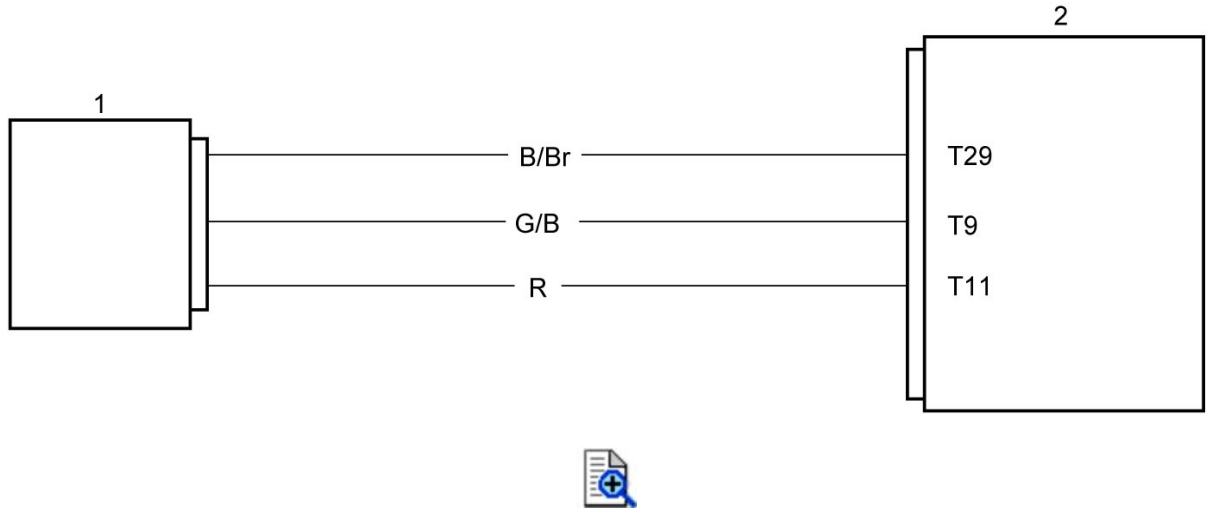

1.	IAP sensor	2.	ECM

Troubleshooting

Step	Action	Yes	No
1	**IAP sensor power supply circuit check** 1) Turn the ignition switch OFF. 2) Disconnect the IAP sensor coupler. ☞ 3) Check for proper terminal connection to the IAP sensor coupler. 4) If connections are OK, turn the ignition switch ON. 5) Measure the voltage between the R wire and B/Br wire. **IAP sensor power supply voltage** **[Standard]: 4.75 – 5.25 V**	Go to Step 3.	Go to Step 2.

	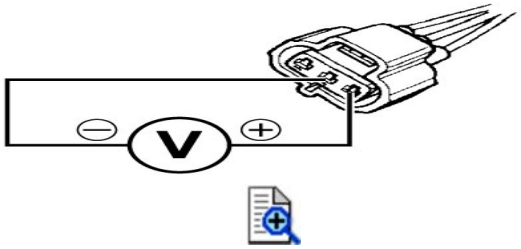 ***Is check result OK?***		
2	**IAP sensor ground circuit check** 1) Measure the voltage between the R wire and ground. 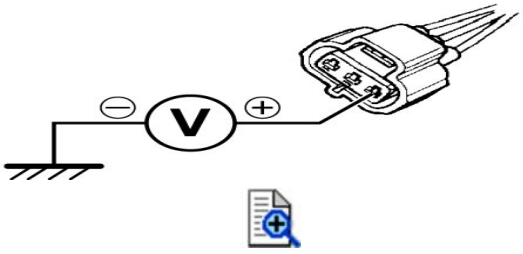 ***Is voltage same as Step 1?***	Repair or replace the B/Br wire.	Repair or replace the R wire.
3	**IAP sensor signal circuit check** 1) Turn the ignition switch OFF. 2) Disconnect the ECM couplers. ☞ 3) Check for proper terminal connection to the ECM couplers. 4) If connections are OK, check the following points. • Resistance — G/B wire: less than 1 Ω 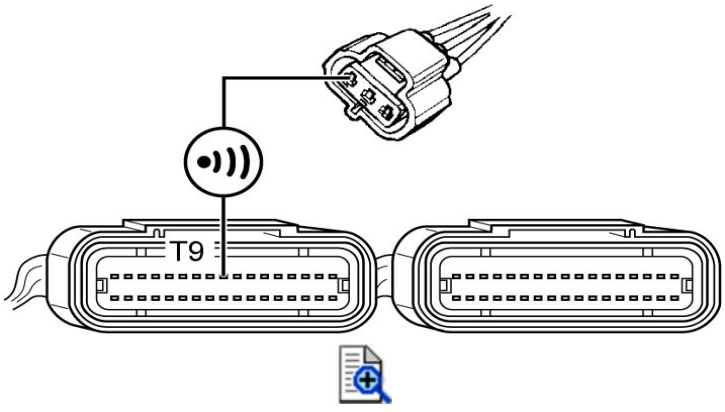 — Between G/B wire and ground: infinity 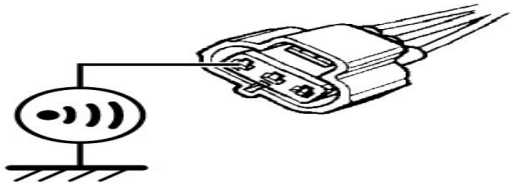	Go to Step 4.	Repair or replace the G/B wire.

	— G/B wire terminal and other terminal at IAP sensor coupler: infinity 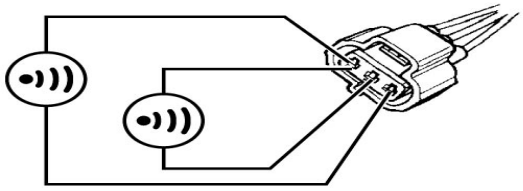 • Voltage — Turn the ignition switch ON. — G/B wire: approx. 0 V 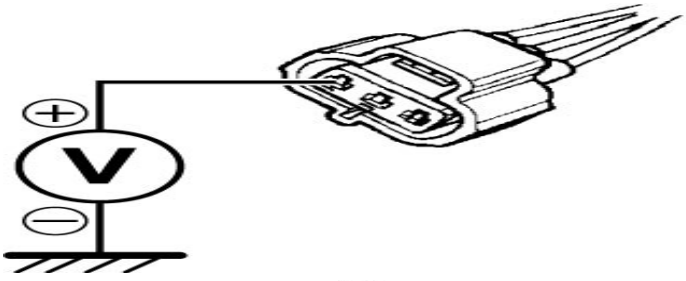 ***Is check result OK?***		
4	**IAP sensor output voltage at idle speed check** 1) Turn the ignition switch OFF. 2) Connect the ECM couplers and IAP sensor coupler. 3) Measure the IAP sensor output voltage at idle speed. Refer to "IAP Sensor Output Voltage at Idle Speed" under ***IAP Sensor Inspection***. ***Is check result OK?***	Go to Step 5.	Check the vacuum hoses for crack or damage. If vacuum hoses are OK, replace the IAP sensor with a new one. ☞
5	**IAP sensor output voltage check** 1) Turn the ignition switch OFF. 2) Remove the IAP sensor. ☞ 3) Measure the IAP sensor output voltage. Refer to "IAP Sensor Output Voltage" under ***IAP Sensor Inspection***. ***Is check result OK?***	Replace the ECM with a known good one, and inspect it again. ☞	Replace the IAP sensor with a new one. ☞

DTC P0110-H / P0110-L (C21)

DTC Detecting Condition and Trouble Area

DTC detecting condition	Trouble area
P0110-H (C21): IAT Sensor Circuit High Voltage The sensor output voltage is higher than 4.85 V.	• IAT sensor • IAT sensor circuit • ECM
P0110-L (C21): IAT Sensor Circuit Low Voltage The sensor output voltage is lower than 0.15 V.	

Wiring Diagram

Refer to ***FI System Wiring Diagram***.

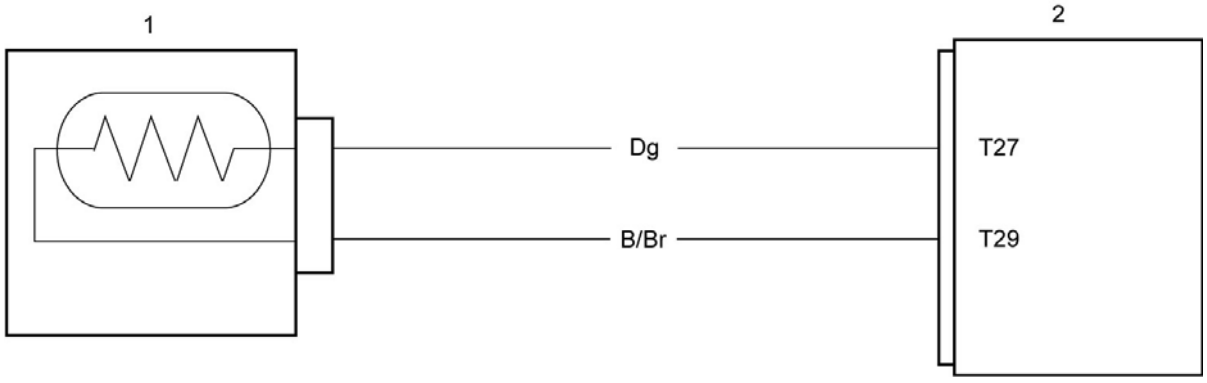

1.	IAT sensor	2.	ECM

Troubleshooting

Step	Action	Yes	No
1	**IAT sensor power supply voltage check** 1) Turn the ignition switch OFF. 2) Disconnect the IAT sensor coupler. ☞ 3) Check for proper terminal connection to the IAT sensor coupler. 4) If connections are OK, turn the ignition switch ON. 5) Measure the voltage between the Dg wire and ground. 6) If OK, measure the voltage between the Dg wire and B/Br wire. **IAT sensor power supply voltage** **[Standard]: 4.5 – 5.5 V**	Go to Step 3.	Go to Step 2.

	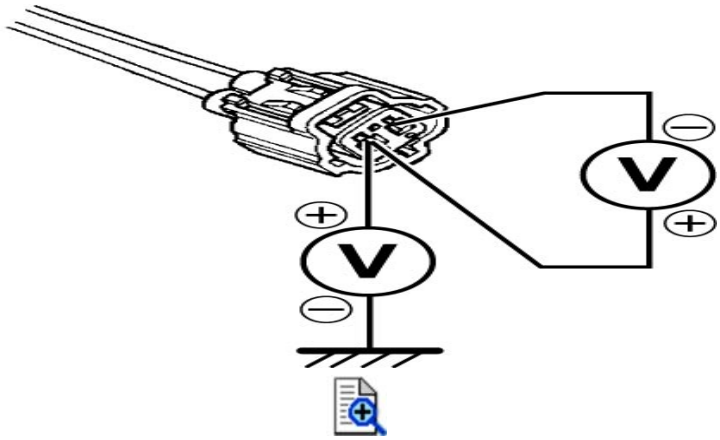 ***Is check result OK?***		
2	**IAT sensor circuit check** 1) Turn the ignition switch OFF. 2) Disconnect the ECM couplers. ☞ 3) Check for proper terminal connection to the ECM couplers. 4) If connections are OK, check the following points. • Resistance — Dg wire and B/Br wire: less than 1 Ω 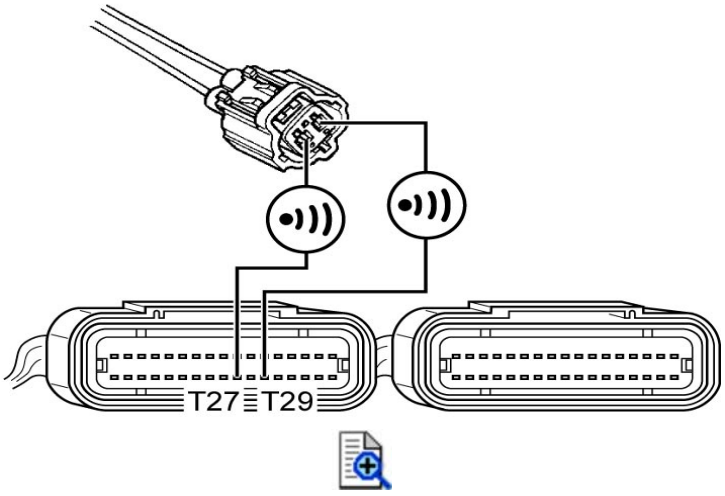 — Between Dg wire and ground: infinity — Between B/Br wire and ground: infinity 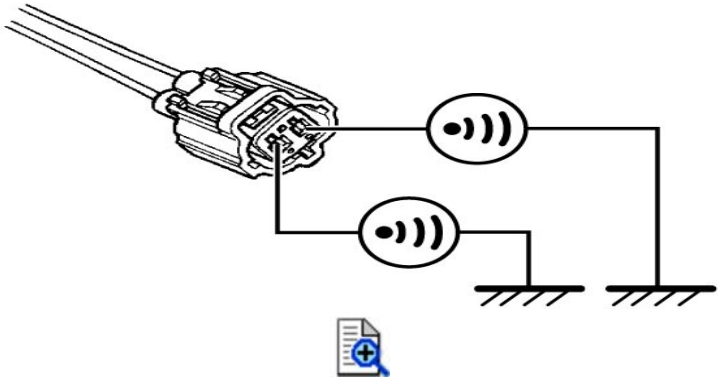	Replace the ECM with a known good one, and inspect it again. ☞	Repair or replace the defective wire harness.

	— Between Dg wire terminal and B/Br wire terminal at IAT sensor coupler: infinity 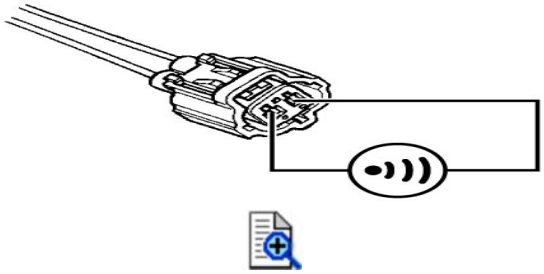 • Voltage — Turn the ignition switch ON. — Dg wire and B/Br wire: approx. 0 V 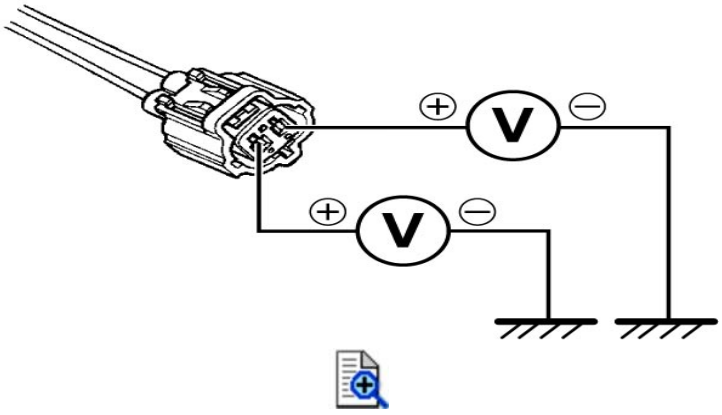 ***Is check result OK?***		
3	**IAT sensor resistance check** 1) Turn the ignition switch OFF. 2) Measure the IAT sensor resistance. ☞ ***Is check result OK?***	Replace the ECM with a known good one, and inspect it again. ☞	Replace the IAT sensor with a new one. ☞

DTC P0115-H / P0115-L (C15)

DTC Detecting Condition and Trouble Area

DTC detecting condition	Trouble area
P0115-H (C15): ECT Sensor Circuit High Voltage The sensor output voltage is higher than 4.85 V.	• ECT sensor • ECT sensor circuit • ECM
P0115-L (C15): ECT Sensor Circuit Low Voltage The sensor output voltage is lower than 0.15 V.	

Wiring Diagram

Refer to ***FI System Wiring Diagram***.

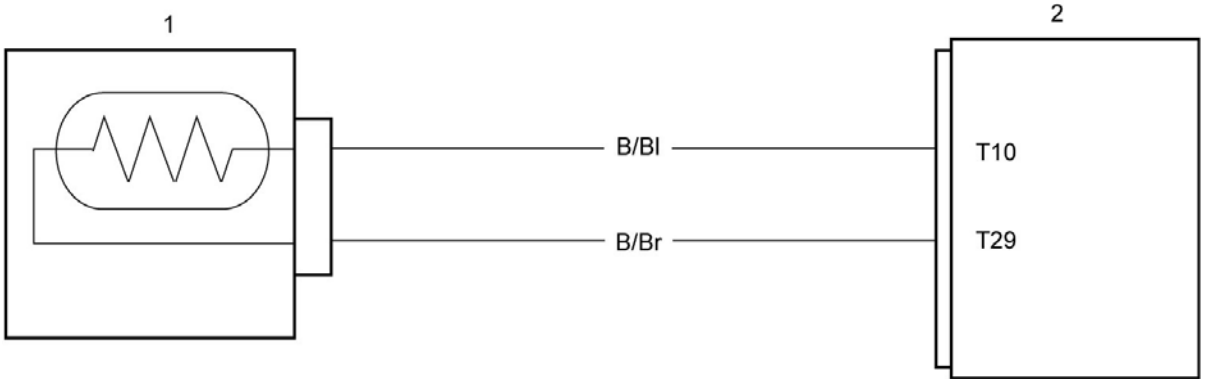

1.	ECT sensor	2.	ECM

Troubleshooting

Step	Action	Yes	No
1	**ECT sensor power supply voltage check** 1) Turn the ignition switch OFF. 2) Disconnect the ECT sensor coupler. ☞ 3) Check for proper terminal connection to the ECT sensor coupler. 4) If connections are OK, turn the ignition switch ON. 5) Measure the voltage between the B/Bl wire and ground. 6) If OK, measure the voltage between the B/Bl wire and B/Br wire. **ECT sensor power supply voltage** **[Standard]: 4.5 – 5.5 V**	Go to Step 3.	Go to Step 2.

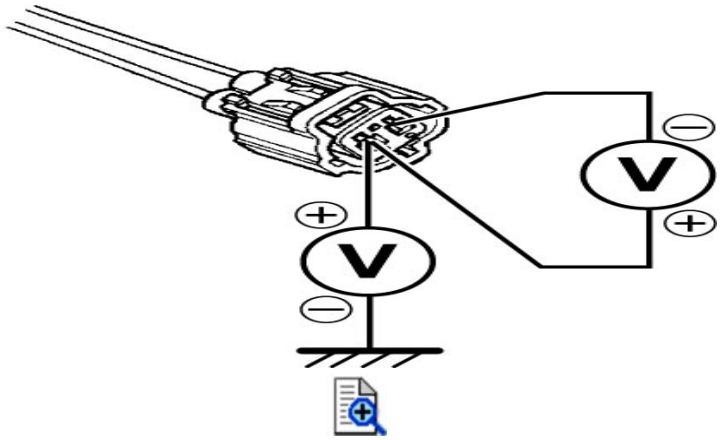

Is check result OK?

2	**ECT sensor circuit check** 1) Turn the ignition switch OFF. 2) Disconnect the ECM couplers. ☞ 3) Check for proper terminal connection to the ECM couplers. 4) If connections are OK, check the following points. • Resistance — B/Bl wire and B/Br wire: less than 1 Ω	Replace the ECM with a known good one, and inspect it again. ☞	Repair or replace the defective wire harness.

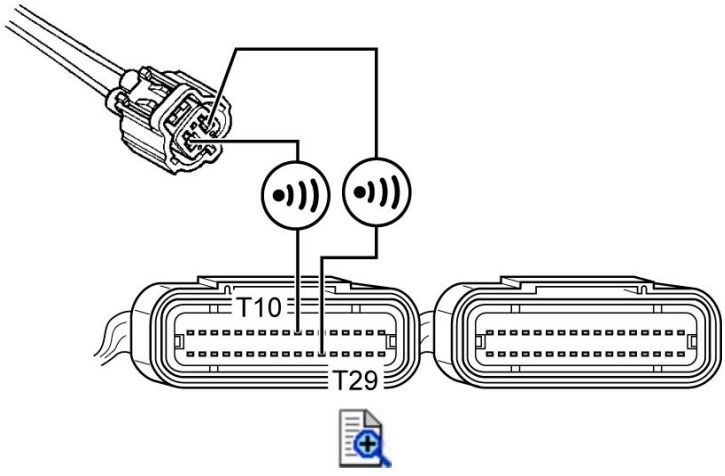

— Between B/Bl wire and ground: infinity
— Between B/Br wire and ground: infinity

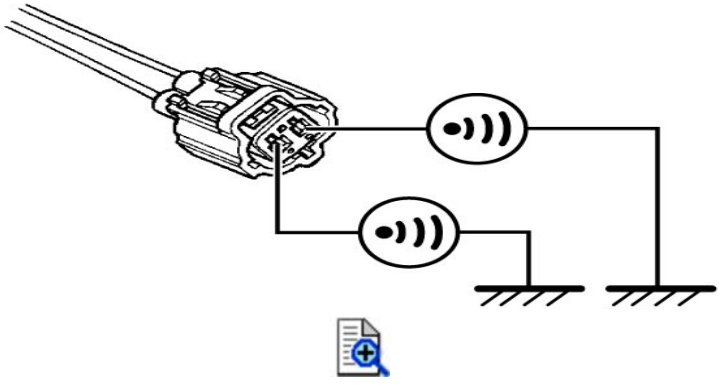

	— Between B/Bl wire terminal and B/Br wire terminal at ECT sensor coupler: infinity 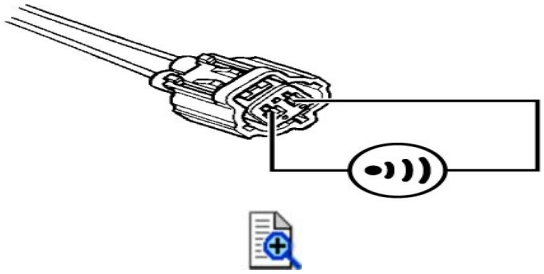 • Voltage — Turn the ignition switch ON. — B/Bl wire and B/Br wire: approx. 0 V 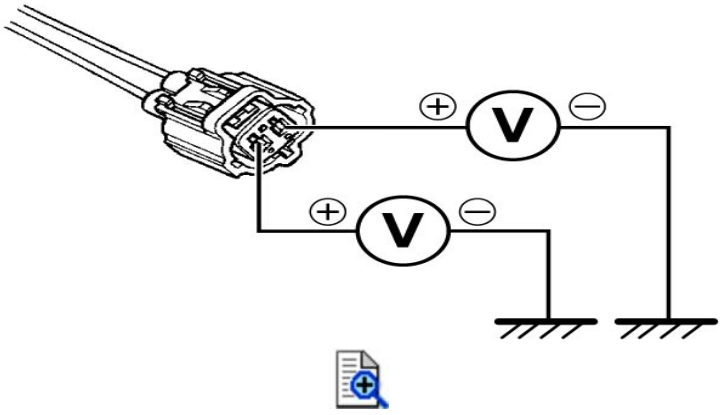 ***Is check result OK?***		
3	**ECT sensor resistance check** 1) Turn the ignition switch OFF. 2) Measure the ECT sensor resistance. ☞ ***Is check result OK?***	Replace the ECM with a known good one, and inspect it again. ☞	Replace the ECT sensor with a new one. ☞

DTC P0120-H / P0120-L (C14)

DTC Detecting Condition and Trouble Area

DTC detecting condition	Trouble area
P0120-H (C14): TP Sensor Circuit High Voltage The sensor output voltage is higher than 4.8 V.	• TP sensor • TP sensor circuit • ECM
P0120-L (C14): TP Sensor Circuit Low Voltage The sensor output voltage is lower than 0.2 V.	

Wiring Diagram

Refer to ***FI System Wiring Diagram***.

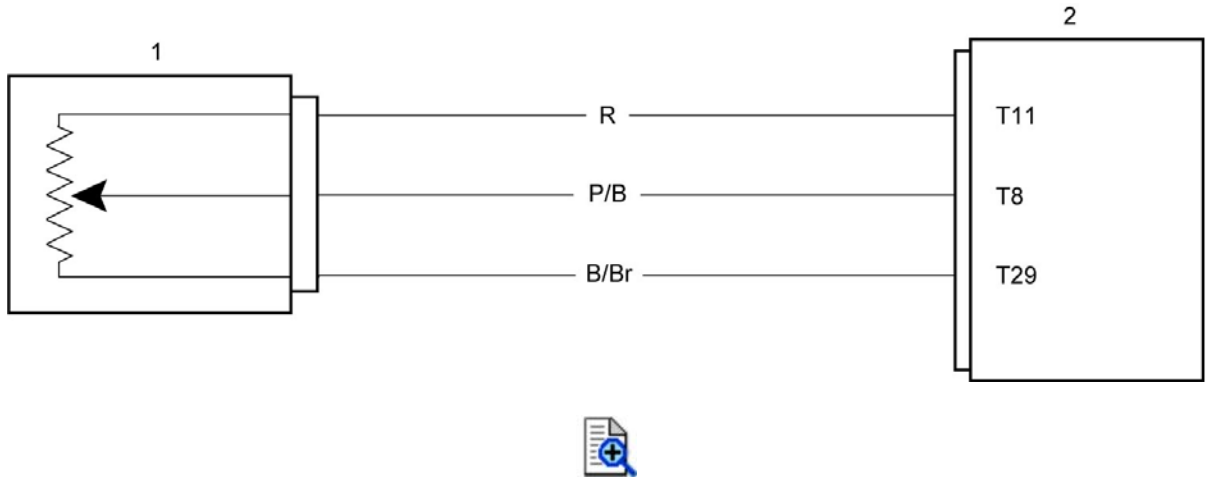

1.	TP sensor	2.	ECM

Troubleshooting

Step	Action	Yes	No
1	**TP sensor power supply circuit check** 1) Turn the ignition switch OFF. 2) Disconnect the TP sensor coupler. ☞ 3) Check for proper terminal connection to the TP sensor coupler. 4) If connections are OK, turn the ignition switch ON. 5) Measure the voltage between the R wire and B/Br wire. **TP sensor power supply voltage** **[Standard]: 4.5 – 5.5 V**	Go to Step 3.	Go to Step 2.

	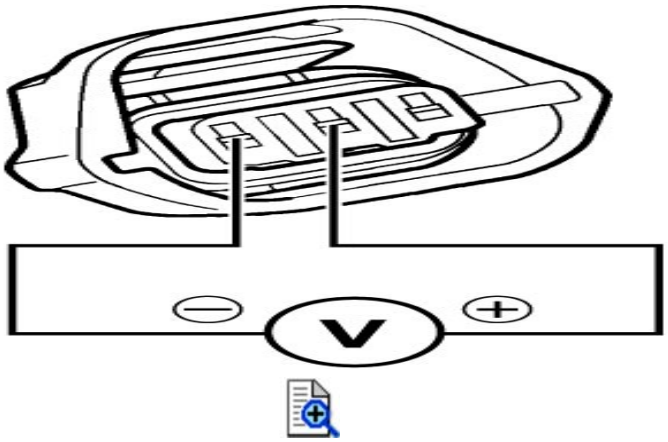 ***Is check result OK?***		
2	**TP sensor ground circuit check** 1) Measure the voltage between the R wire and ground. 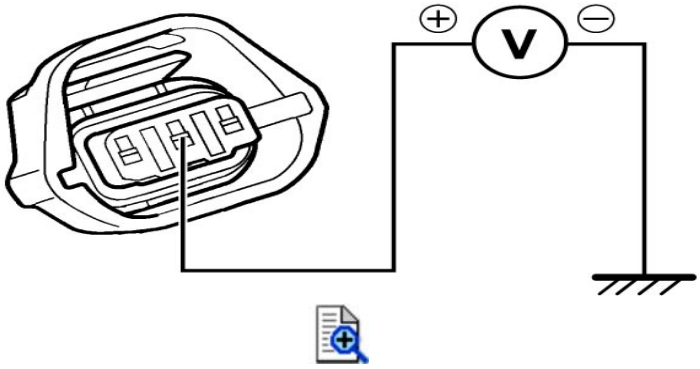 ***Is voltage same as Step 1?***	Repair or replace the B/Br wire.	Repair or replace the R wire.
3	**TP sensor signal circuit check** 1) Turn the ignition switch OFF. 2) Disconnect the ECM couplers. ☞ 3) Check for proper terminal connection to the ECM couplers. 4) If connections are OK, check the following points. • Resistance — P/B wire: less than 1 Ω 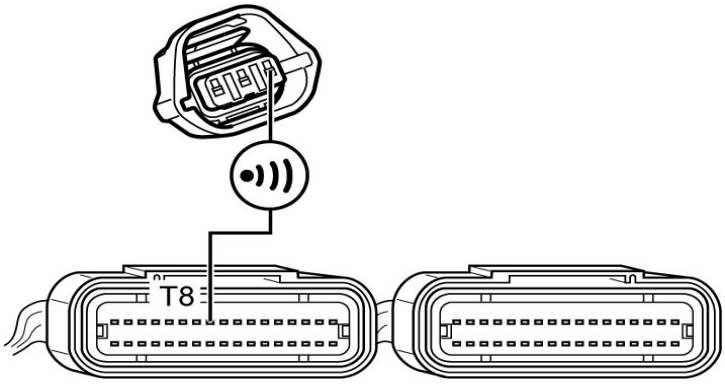	Go to Step 4.	Repair or replace the P/B wire.



— Between P/B wire and ground: infinity

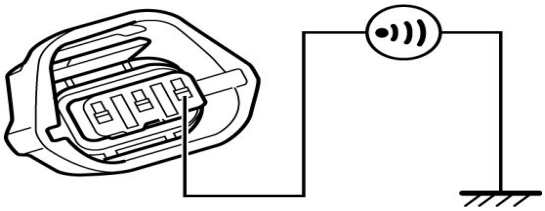



— Between P/B wire terminal and other terminal at TP sensor coupler: infinity

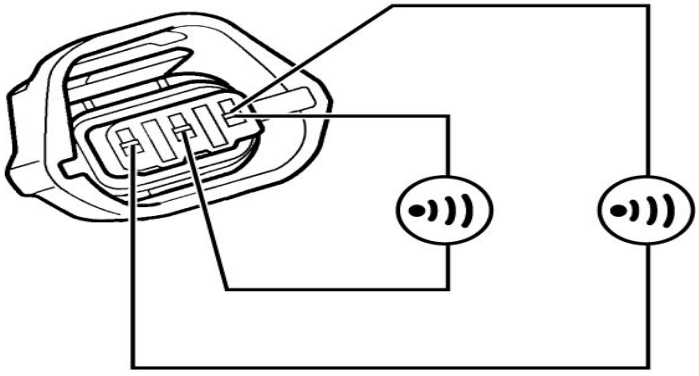



- Voltage
  - — Turn the ignition switch ON.
  - — P/B wire: approx. 0 V

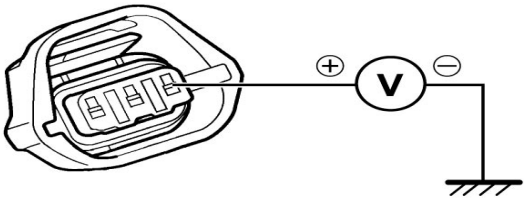



Is check result OK?

4	**TP sensor output voltage check** 1) Turn the ignition switch OFF. 2) Connect the ECM couplers. 3) Measure the TP sensor output voltage. ☞ ***Is check result OK?***	Replace the ECM with a known good one, and inspect it again. ☞	Replace the TP sensor with a new one. ☞

DTC P0130 (C44)

DTC Detecting Condition and Trouble Area

DTC detecting condition	Trouble area
P0130 (C44): HO2 Sensor Circuit Malfunction HO2 sensor output voltage is not input to ECM during engine operation and running condition.	• HO2 sensor • HO2 sensor circuit • ECM

Wiring Diagram

Refer to ***FI System Wiring Diagram***.

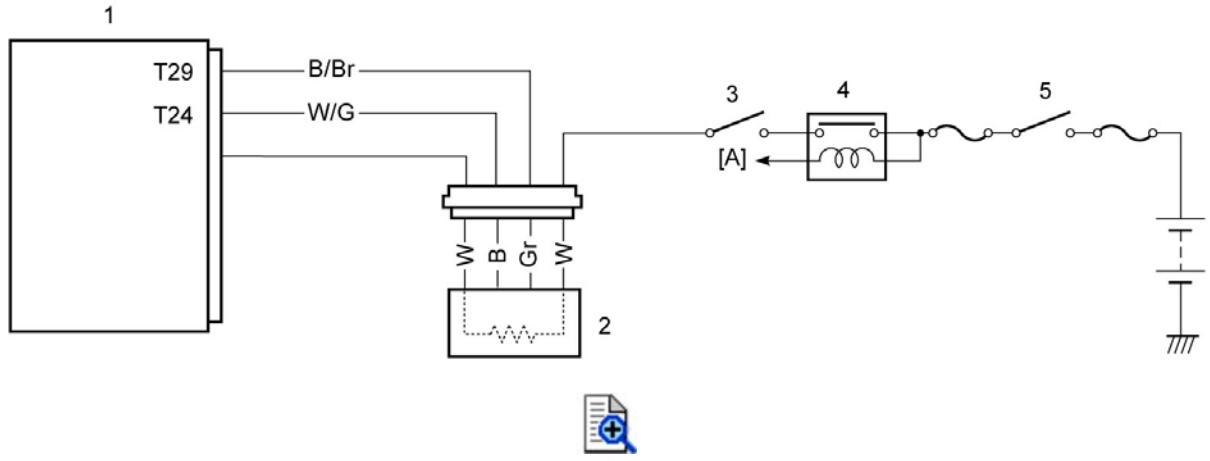

[A]:	To side-stand switch	2.	HO2 sensor	4.	Side-stand relay
1.	ECM	3.	Engine stop switch	5.	Ignition switch

Troubleshooting

Step	Action	Yes	No
1	**HO2 sensor circuit check** 1) Turn the ignition switch OFF. 2) Disconnect the HO2 sensor coupler and ECM couplers. • HO2 sensor: ☞ • ECM: ☞ 3) Check for proper terminal connection to the HO2 sensor coupler and ECM couplers. 4) If connections are OK, check the following points. • Resistance — W/G wire and B/Br wire: less than 1 Ω	Go to Step 2.	Repair or replace the defective wire harness.

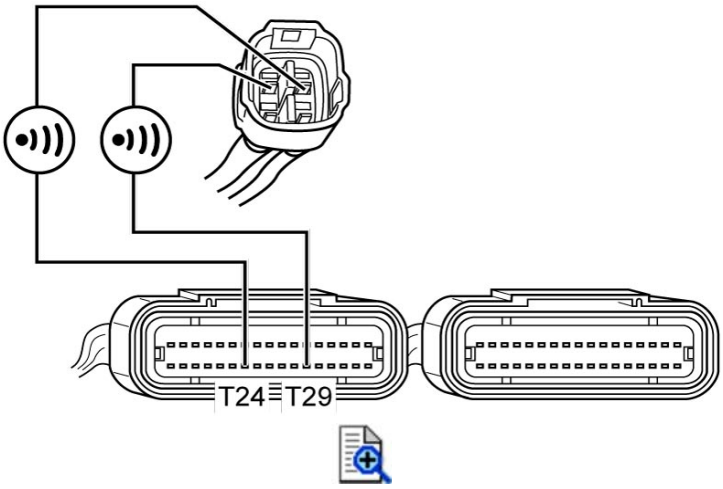

— Between W/G wire and ground: infinity
— Between B/Br wire and ground: infinity

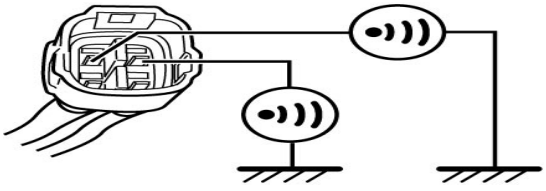

— Between W/G wire terminal and other terminal at HO2 sensor coupler: infinity

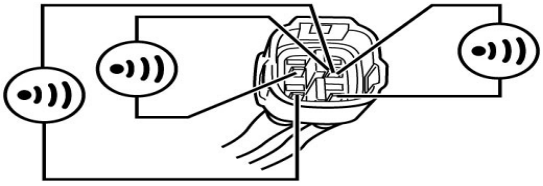

— Between B/Br wire terminal and other terminal at HO2 sensor coupler: infinity

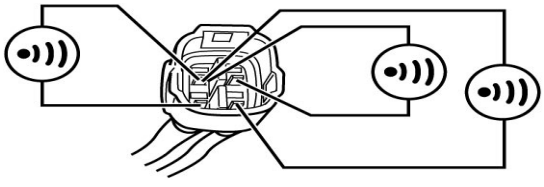

- Voltage
  — Turn the ignition switch ON.
  — W/G wire and B/Br wire: approx. 0 V

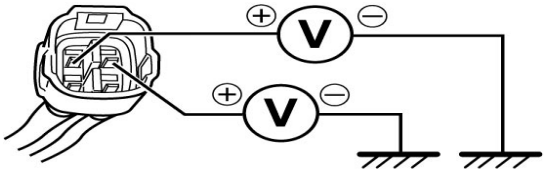

	 ***Is check result OK?***		
2	**HO2 sensor output voltage check** 1) Turn the ignition switch OFF. 2) Connect the ECM couplers. 3) Measure the HO2 sensor output voltage. Refer to "HO2 Sensor Output Voltage" under ***HO2 Sensor Inspection***. ***Is check result OK?***	Replace the ECM with a known good one, and inspect it again. ☞	Replace the HO2 sensor with a new one. ☞

DTC P0135 (C44)

DTC Detecting Condition and Trouble Area

DTC detecting condition	Trouble area
P0135 (C44): HO2 Sensor Heater Circuit Malfunction The heater can not operate so that heater operation voltage is not supplied to the HO2 sensor heater circuit.	• HO2 sensor heater • HO2 sensor heater circuit • ECM

Wiring Diagram

Refer to ***FI System Wiring Diagram***.

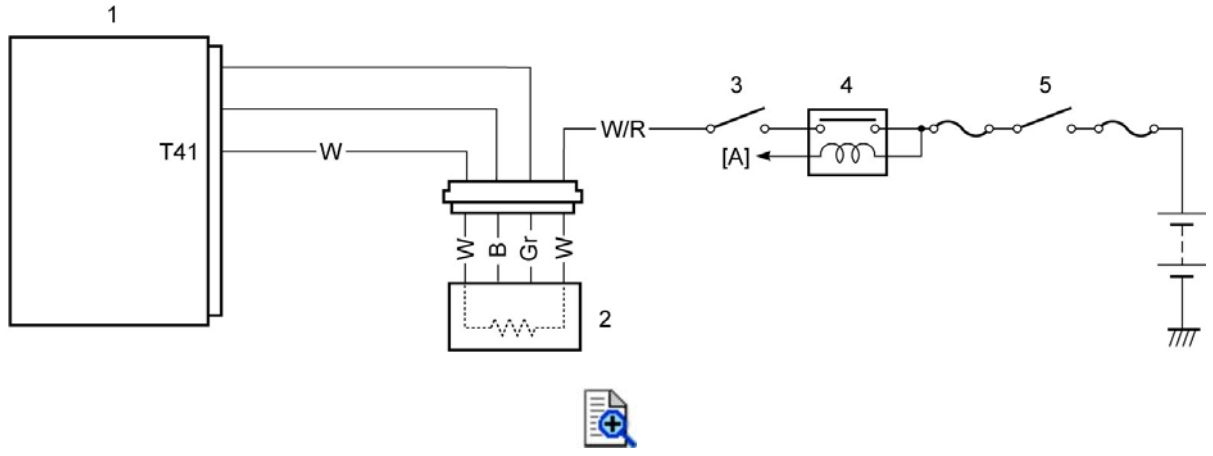

[A]:	To side-stand switch	2.	HO2 sensor	4.	Side-stand relay
1.	ECM	3.	Engine stop switch	5.	Ignition switch

Troubleshooting

Step	Action	Yes	No
1	**HO2 sensor heater power supply voltage check** 1) Turn the ignition switch OFF. 2) Disconnect the HO2 sensor coupler. ☞ 3) Check for proper terminal connection to the HO2 sensor coupler. 4) If connections are OK, turn ignition switch ON. 5) Measure the voltage between W/R wire and ground. **HO2 sensor heater power supply voltage** **[Standard]: Battery voltage**	Go to Step 2.	Repair or replace the W/R wire.

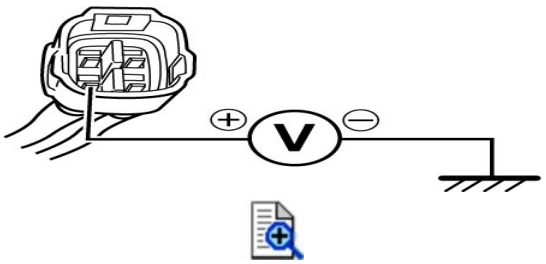

Is check result OK?

2	**HO2 sensor heater drive circuit check** 1) Turn the ignition switch OFF. 2) Disconnect the ECM couplers. ☞ 3) Check for proper terminal connection to the ECM couplers. 4) If connections are OK, check the following points. • Resistance — W wire: less than 1 Ω 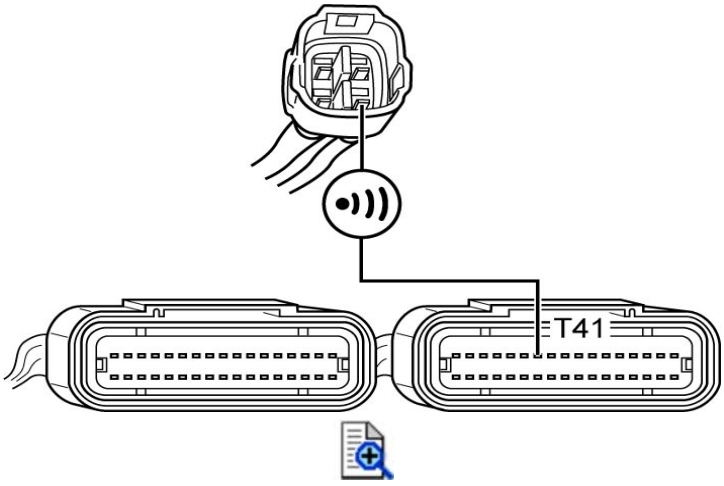 — Between W wire and ground: infinity 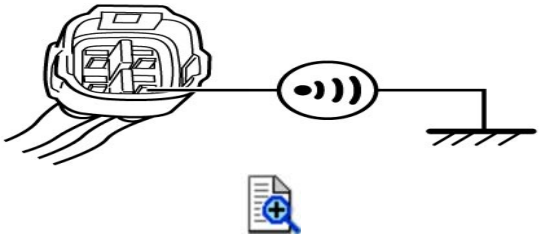 — Between W wire terminal and other terminal at HO2 sensor coupler: infinity 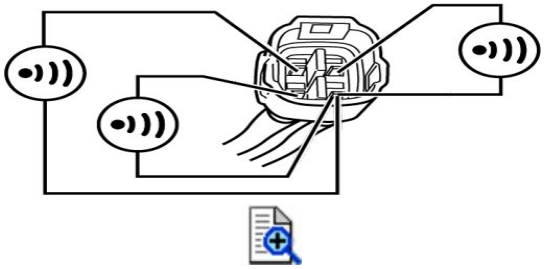	Go to Step 3.	Repair or replace the W wire.

	• Voltage — Turn the ignition switch ON. — W wire: approx. 0 V 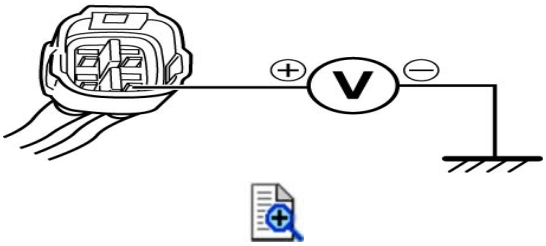 ***Is check result OK?***		
3	**HO2 sensor heater resistance check** 1) Turn the ignition switch OFF. 2) Measure the HO2 sensor resistance. Refer to "HO2 Sensor Heater Resistance" under ***HO2 Sensor Inspection***. ***Is check result OK?***	Replace the ECM with a known good one, and inspect it again. ☞	Replace the HO2 sensor with a new one. ☞

DTC P0201 (C32)

DTC Detecting Condition and Trouble Area

DTC detecting condition	Trouble area
P0201 (C32): Fuel Injector #1 Malfunction Fuel injector #1 signal is interrupted by 4 times or more continuity although CKP signal is detected.	• Fuel injector #1 • Fuel injector #1 circuit • ECM

Wiring Diagram

Refer to ***FI System Wiring Diagram***.

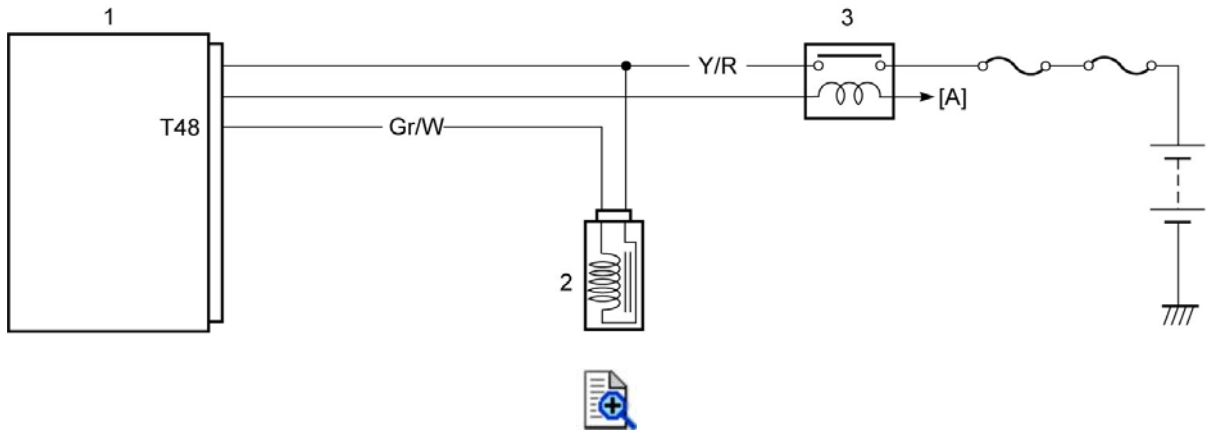

[A]:	To engine stop switch	2.	Fuel injector #1
1.	ECM	3.	FP relay

Troubleshooting

Step	Action	Yes	No
1	**Fuel injector power supply voltage check** 1) Turn the ignition switch OFF. 2) Disconnect the fuel injector #1 coupler. Refer to ***Fuel Injector / Fuel Delivery Pipe Removal and Installation***. 3) Connect the immobilizer antenna coupler and install the fuel tank lower cover. (If equipped) Refer to ***Fuel Pressure Inspection***. 4) Check for proper terminal connection to the fuel injector #1 coupler. 5) If connections are OK, turn the ignition switch ON. 6) Measure the voltage between Y/R wire and ground. **NOTE:** **Fuel injector power supply voltage can be detected only for 3 seconds after**	Go to Step 2.	Repair or replace the Y/R wire.

	ignition switch is turned ON. **Fuel injector power supply voltage** **#1 [Standard]: Battery voltage** 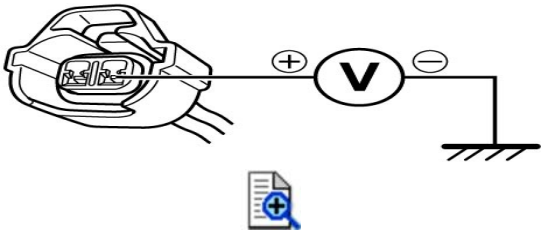 ***Is check result OK?***		
2	**Fuel injector drive circuit check** 1) Turn the ignition switch OFF. 2) Disconnect the ECM couplers. ☞ 3) Check for proper terminal connection to the ECM couplers. 4) If connections are OK, check the following points. • Resistance — Gr/W wire: less than 1 Ω 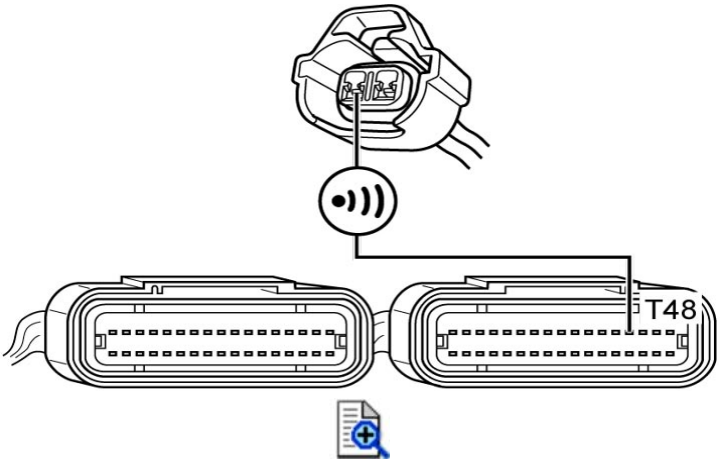 — Between Gr/W wire and ground: infinity 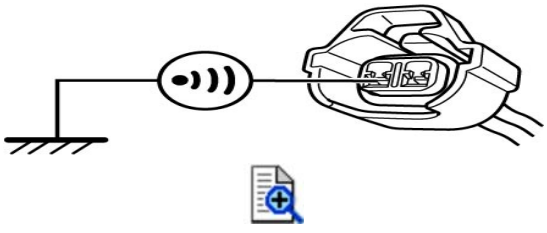 — Between Gr/W wire terminal and Y/R wire terminal at fuel injector #1 coupler: infinity 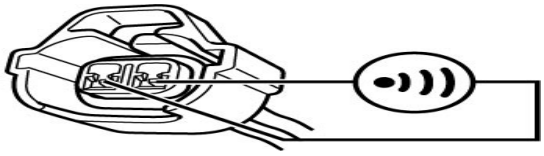	Go to Step 3.	Repair or replace the Gr/W wire.

	 • Voltage — Turn the ignition switch ON. — Gr/W wire: approx. 0 V 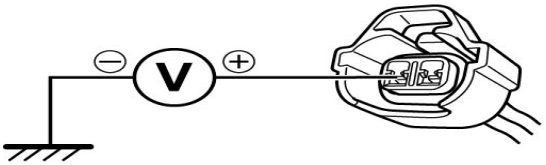  ***Is check result OK?***		
3	**Fuel injector resistance check** 1) Turn the ignition switch OFF. 2) Measure the fuel injector resistance. ☞ ***Is check result OK?***	Replace the ECM with a known good one, and inspect it again. ☞	Replace the fuel injector #1 with a new one. ☞

DTC P0202 (C33)

DTC Detecting Condition and Trouble Area

DTC detecting condition	Trouble area
P0202 (C33): Fuel Injector #2 Malfunction Fuel injector #2 signal is interrupted by 4 times or more continuity although CKP signal is detected.	• Fuel injector #2 • Fuel injector #2 circuit • ECM

Wiring Diagram

Refer to ***FI System Wiring Diagram***.

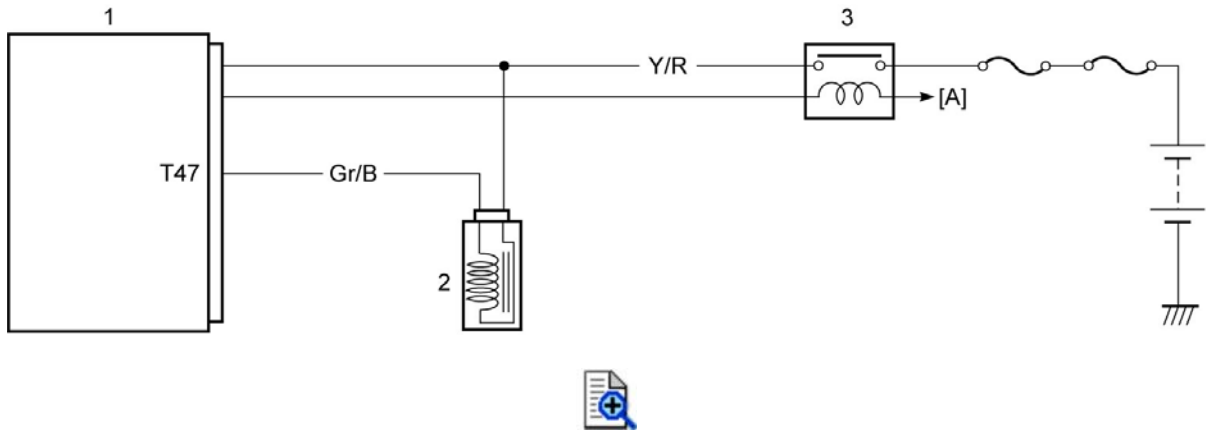

[A]:	To engine stop switch	2.	Fuel injector #2
1.	ECM	3.	FP relay

Troubleshooting

Step	Action	Yes	No
1	**Fuel injector power supply voltage check** 1) Turn the ignition switch OFF. 2) Disconnect the fuel injector #2 coupler. Refer to ***Fuel Injector / Fuel Delivery Pipe Removal and Installation***. 3) Connect the immobilizer antenna coupler and install the fuel tank lower cover. (If equipped) Refer to ***Fuel Pressure Inspection***. 4) Check for proper terminal connection to the fuel injector #2 coupler. 5) If connections are OK, turn the ignition switch ON. 6) Measure the voltage between Y/R wire and ground. **NOTE:** **Fuel injector power supply voltage can be detected only for 3 seconds after**	Go to Step 2.	Repair or replace the Y/R wire.

	ignition switch is turned ON. **Fuel injector power supply voltage** **#2 [Standard]: Battery voltage** 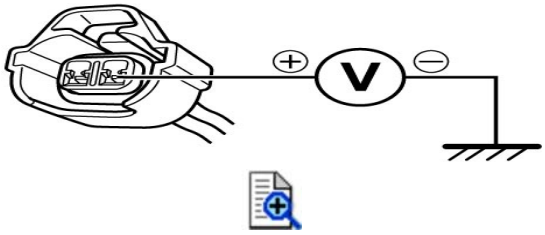 ***Is check result OK?***		
2	**Fuel injector drive circuit check** 1) Turn the ignition switch OFF. 2) Disconnect the ECM couplers. ☞ 3) Check for proper terminal connection to the ECM couplers. 4) If connections are OK, check the following points. • Resistance — Gr/B wire: less than 1 Ω 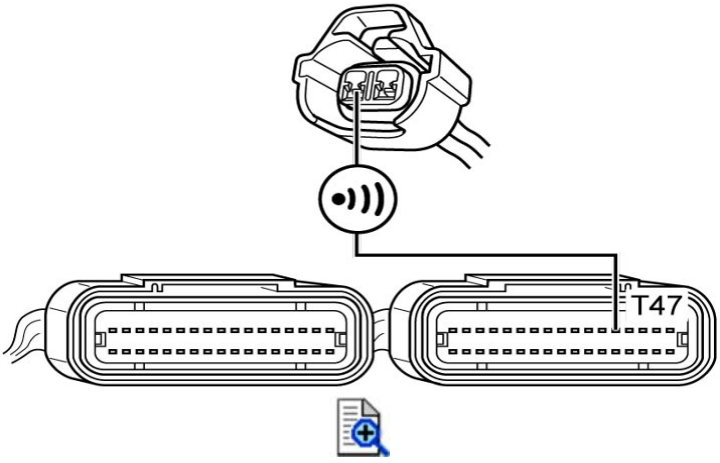 — Between Gr/B wire and ground: infinity 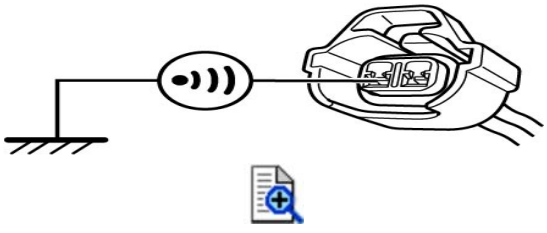 — Between Gr/B wire terminal and Y/R wire terminal at fuel injector #2 coupler: infinity 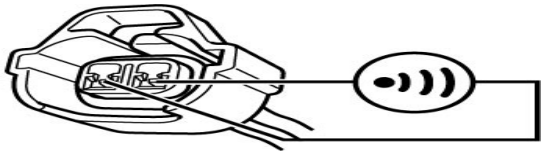	Go to Step 3.	Repair or replace the Gr/B wire.

	 • Voltage — Turn the ignition switch ON. — Gr/B wire: approx. 0 V 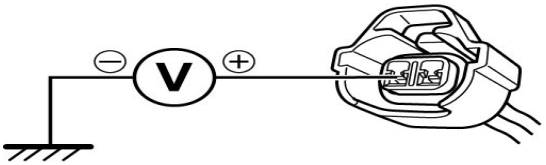  ***Is check result OK?***		
3	**Fuel injector resistance check** 1) Turn the ignition switch OFF. 2) Measure the fuel injector resistance. ☞ ***Is check result OK?***	Replace the ECM with a known good one, and inspect it again. ☞	Replace the fuel injector #2 with a new one. ☞

DTC P0203 (C34)

DTC Detecting Condition and Trouble Area

DTC detecting condition	Trouble area
P0203 (C34): Fuel Injector #3 Malfunction Fuel injector #3 signal is interrupted by 4 times or more continuity although CKP signal is detected.	• Fuel injector #3 • Fuel injector #3 circuit • ECM

Wiring Diagram

Refer to ***FI System Wiring Diagram***.

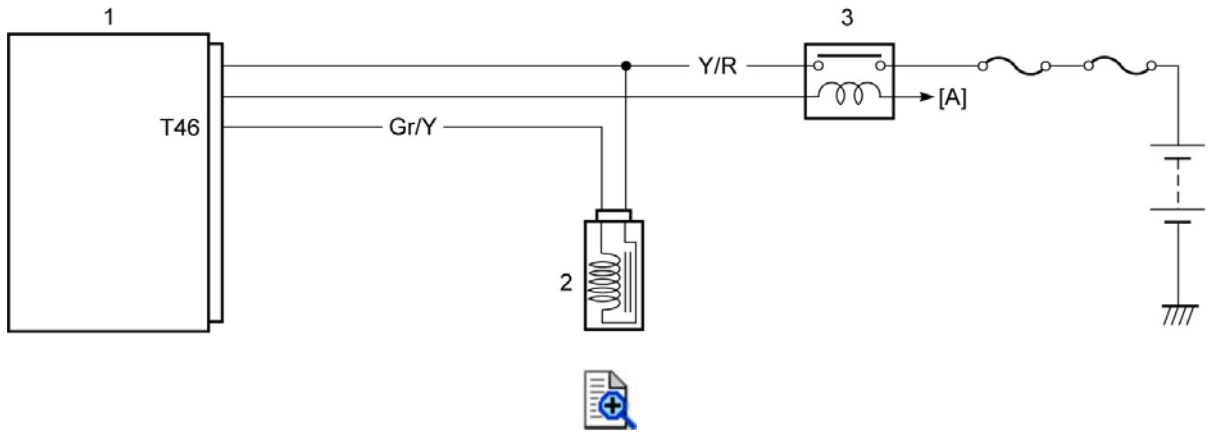

[A]:	To engine stop switch	2.	Fuel injector #3
1.	ECM	3.	FP relay

Troubleshooting

Step	Action	Yes	No
1	**Fuel injector power supply voltage check** 1) Turn the ignition switch OFF. 2) Disconnect the fuel injector #3 coupler. Refer to ***Fuel Injector / Fuel Delivery Pipe Removal and Installation***. 3) Connect the immobilizer antenna coupler and install the fuel tank lower cover. (If equipped) Refer to ***Fuel Pressure Inspection***. 4) Check for proper terminal connection to the fuel injector #3 coupler. 5) If connections are OK, turn the ignition switch ON. 6) Measure the voltage between Y/R wire and ground. **NOTE:** **Fuel injector power supply voltage can be detected only for 3 seconds after**	Go to Step 2.	Repair or replace the Y/R wire.

	ignition switch is turned ON. **Fuel injector power supply voltage** **#3 [Standard]: Battery voltage** 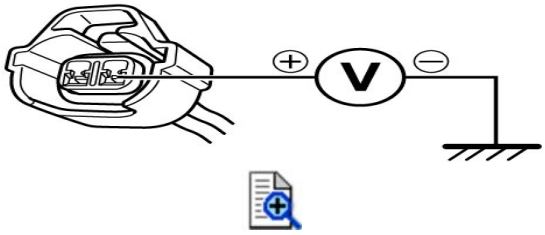 ***Is check result OK?***		
2	**Fuel injector drive circuit check** 1) Turn the ignition switch OFF. 2) Disconnect the ECM couplers. ☞ 3) Check for proper terminal connection to the ECM couplers. 4) If connections are OK, check the following points. • Resistance — Gr/Y wire: less than 1 Ω 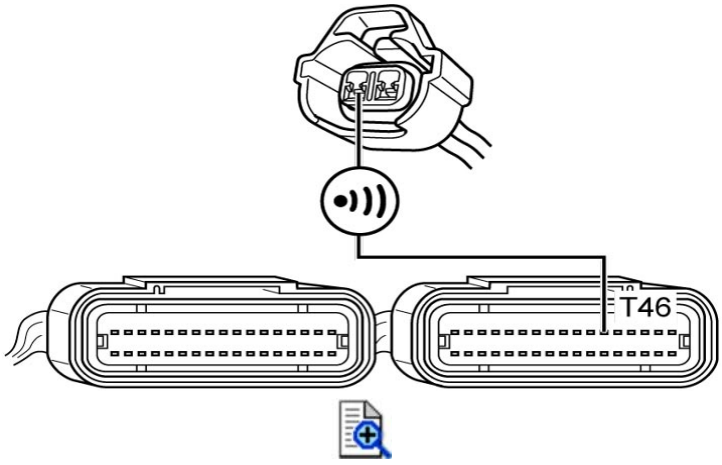 — Between Gr/Y wire and ground: infinity 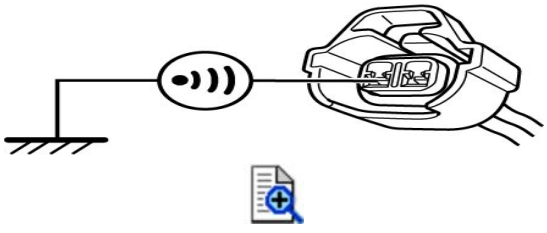 — Between Gr/Y wire terminal and Y/R wire terminal at fuel injector #3 coupler: infinity 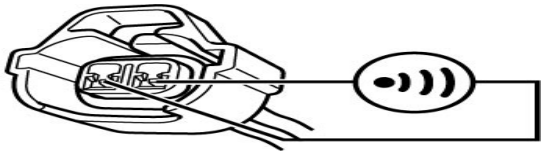	Go to Step 3.	Repair or replace the Gr/Y wire.

	 • Voltage — Turn the ignition switch ON. — Gr/Y wire: approx. 0 V 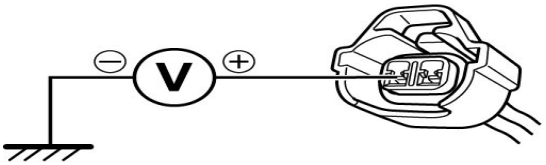  ***Is check result OK?***		
3	**Fuel injector resistance check** 1) Turn the ignition switch OFF. 2) Measure the fuel injector resistance. ☞ ***Is check result OK?***	Replace the ECM with a known good one, and inspect it again. ☞	Replace the fuel injector #3 with a new one. ☞

DTC P0204 (C35)

DTC Detecting Condition and Trouble Area

DTC detecting condition	Trouble area
P0204 (C35): Fuel Injector #4 Malfunction Fuel injector #4 signal is interrupted by 4 times or more continuity although CKP signal is detected.	• Fuel injector #4 • Fuel injector #4 circuit • ECM

Wiring Diagram

Refer to ***FI System Wiring Diagram***.

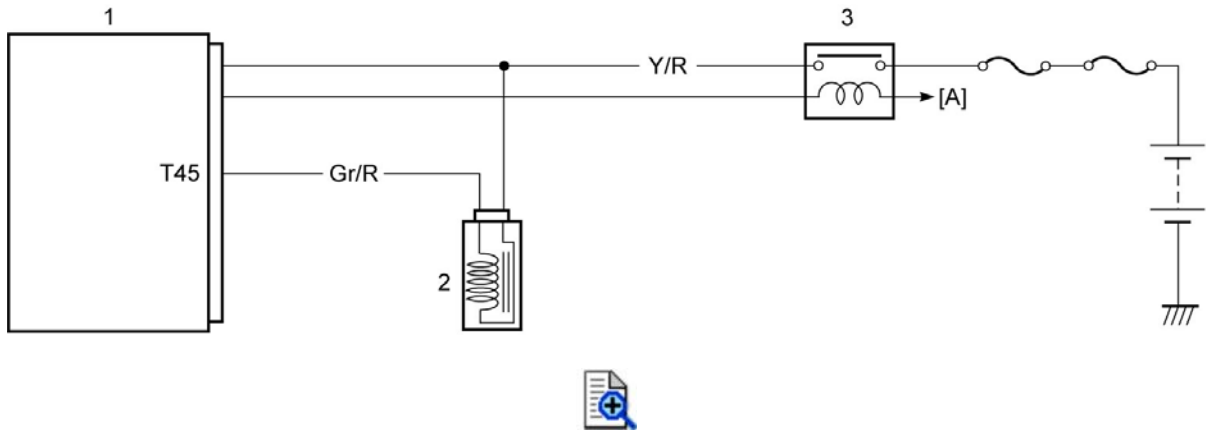

[A]:	To engine stop switch	2.	Fuel injector #4
1.	ECM	3.	FP relay

Troubleshooting

Step	Action	Yes	No
1	**Fuel injector power supply voltage check** 1) Turn the ignition switch OFF. 2) Disconnect the fuel injector #4 coupler. Refer to ***Fuel Injector / Fuel Delivery Pipe Removal and Installation***. 3) Connect the immobilizer antenna coupler and install the fuel tank lower cover. (If equipped) Refer to ***Fuel Pressure Inspection***. 4) Check for proper terminal connection to the fuel injector #4 coupler. 5) If connections are OK, turn the ignition switch ON. 6) Measure the voltage between Y/R wire and ground. **NOTE:** **Fuel injector power supply voltage can be detected only for 3 seconds after**	Go to Step 2.	Repair or replace the Y/R wire.

	ignition switch is turned ON. **Fuel injector power supply voltage** **#4 [Standard]: Battery voltage** 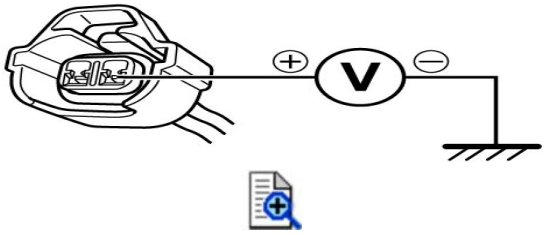 ***Is check result OK?***		
2	**Fuel injector drive circuit check** 1) Turn the ignition switch OFF. 2) Disconnect the ECM couplers. ☞ 3) Check for proper terminal connection to the ECM couplers. 4) If connections are OK, check the following points. • Resistance — Gr/R wire: less than 1 Ω 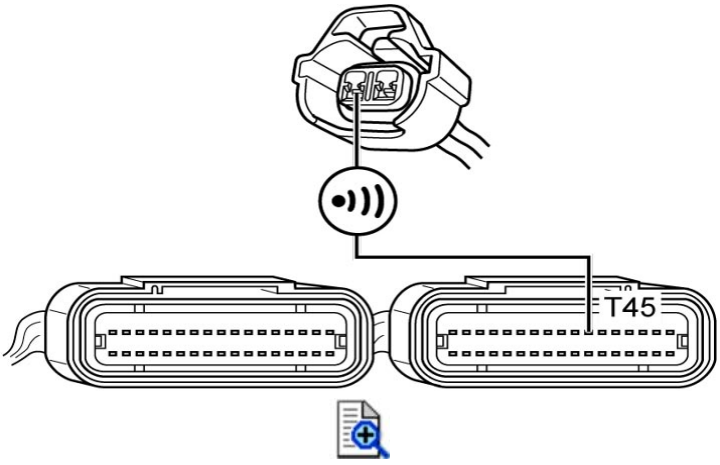 — Between Gr/R wire and ground: infinity 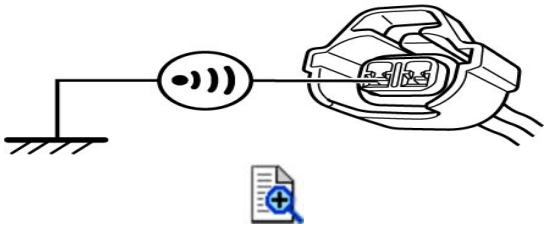 — Between Gr/R wire terminal and Y/R wire terminal at fuel injector #4 coupler: infinity 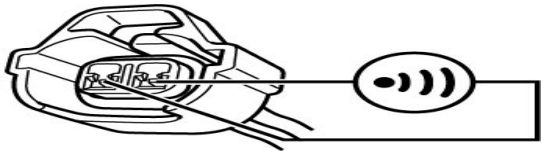	Go to Step 3.	Repair or replace the Gr/R wire.

	 • Voltage — Turn the ignition switch ON. — Gr/R wire: approx. 0 V 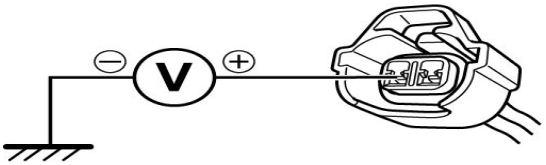  ***Is check result OK?***		
3	**Fuel injector resistance check** 1) Turn the ignition switch OFF. 2) Measure the fuel injector resistance. ☞ ***Is check result OK?***	Replace the ECM with a known good one, and inspect it again. ☞	Replace the fuel injector #4 with a new one. ☞

DTC P0230-H / P0230-L (C41)

DTC Detecting Condition and Trouble Area

DTC detecting condition	Trouble area
P0230-H (C41): Unexpected Power Supply to Fuel Pump Voltage is applied to fuel pump although FP relay is turned OFF.	• Fuel pump relay • Fuel pump relay circuit • ECM
P0230-L (C41): Unexpected Power Cut to Fuel Pump No voltage is applied to fuel pump although FP relay is turned ON.	

Wiring Diagram

Refer to ***FI System Wiring Diagram***.

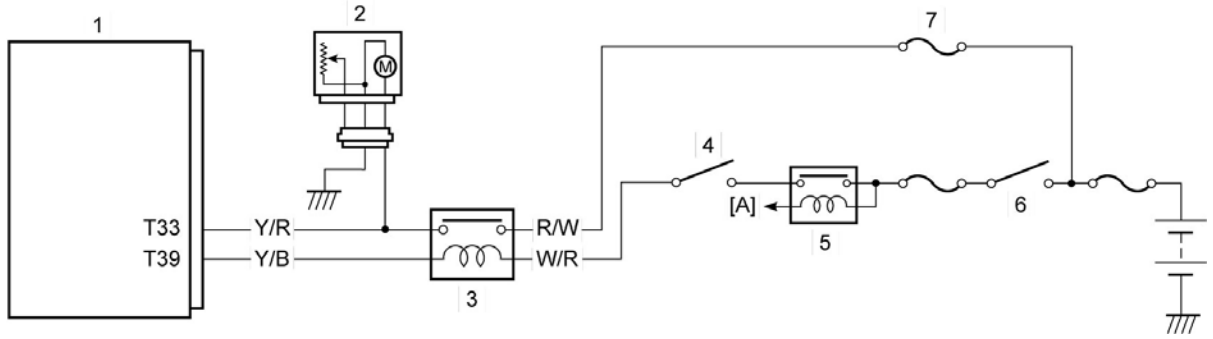

[A]:	To side-stand switch	3.	FP relay	6.	Ignition switch
1.	ECM	4.	Engine stop switch	7.	Fuel fuse
2.	Fuel pump	5.	Side-stand relay		

Troubleshooting

Step	Action	Yes	No
1	**FP relay power supply voltage check** 1) Turn the ignition switch OFF. 2) Remove the FP relay. ☞ 3) Check for proper terminal connection to the FP relay terminal. 4) If connections are OK, turn the ignition switch ON. 5) Measure the voltage between W/R wire and ground. 6) If OK, measure the voltage between R/W wire	Go to Step 2.	Repair or replace the defective wire harness.

	and ground. **FP relay power supply voltage** **[Standard]: Battery voltage** 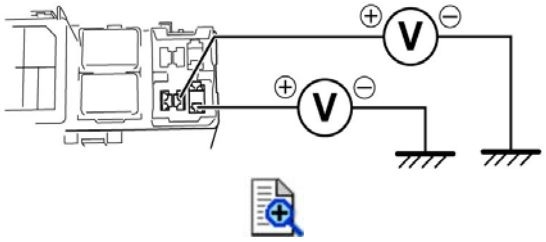 ***Is check result OK?***		
2	**FP relay check** Check the FP relay. ☞ ***Is check result OK?***	Go to Step 3.	Replace the FP relay with a new one. ☞
3	**FP relay drive circuit check** 1) Turn the ignition switch OFF. 2) Disconnect the ECM couplers. ☞ 3) Check for proper terminal connection to the ECM couplers. 4) If connections are OK, check the following points. • Resistance — Y/R wire and Y/B wire: less than 1 Ω 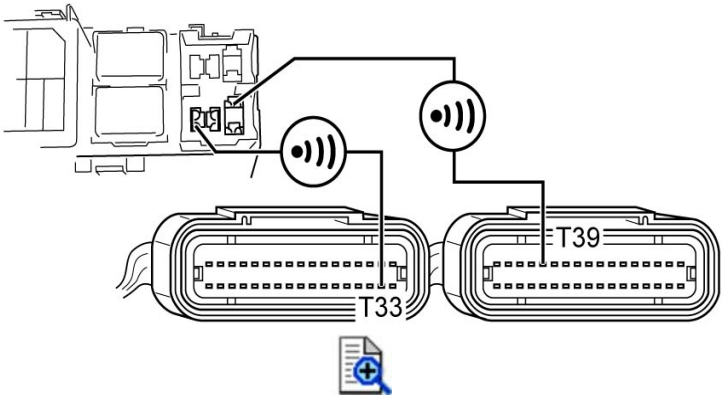 — Between Y/R wire and ground: infinity — Between Y/B wire and ground: infinity 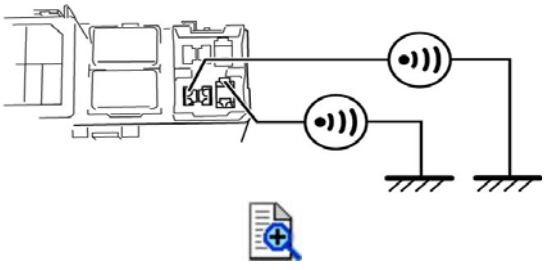 • Voltage — Turn the ignition switch ON. — Y/R wire and Y/B wire: approx. 0 V	Replace the ECM with a known good one, and inspect it again. ☞	Repair or replace the defective wire harness.

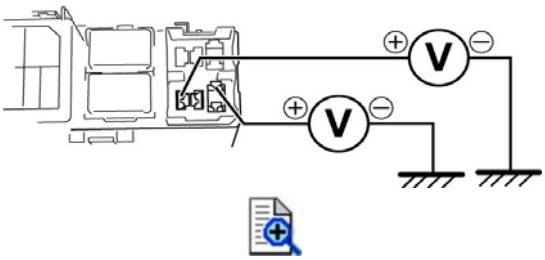

Is check result OK?

DTC P0335 (C12)

DTC Detecting Condition and Trouble Area

DTC detecting condition	Trouble area
P0335 (C12): CKP Sensor Circuit Malfunction The signal does not reach ECM for 2 sec. or more, after receiving the starter signal.	• Metal particles or foreign material being stuck on the CKP sensor and rotor tip • CKP sensor • CKP sensor circuit • ECM

Wiring Diagram

Refer to ***FI System Wiring Diagram***.

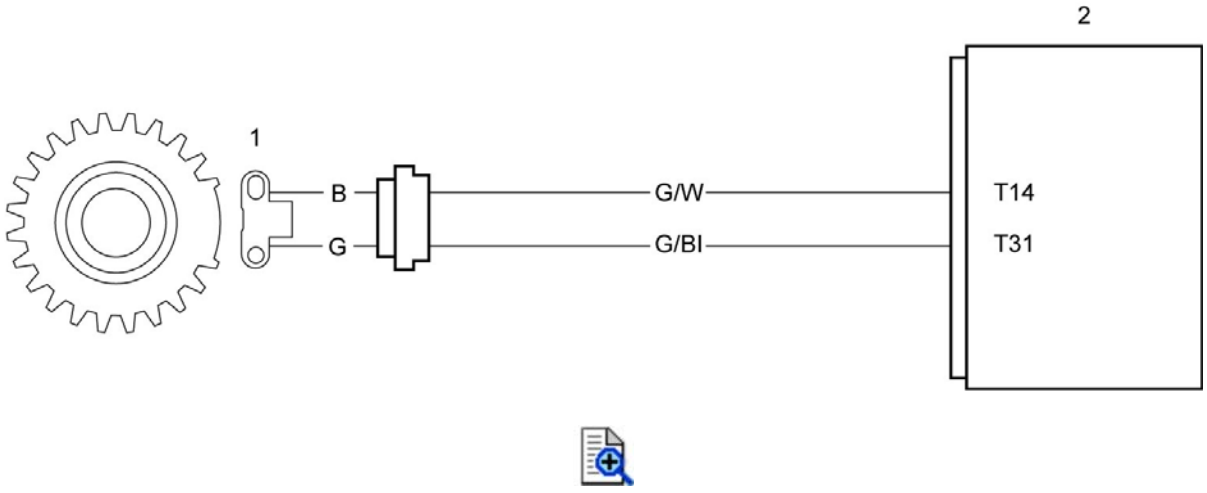

1.	CKP sensor	2.	ECM

Troubleshooting

Step	Action	Yes	No
1	**CKP sensor signal circuit check** 1) Turn the ignition switch OFF. 2) Disconnect the CKP sensor coupler and ECM couplers. • CKP sensor: ☞ • ECM: ☞ 3) Check for proper terminal connection to the CKP sensor coupler and ECM couplers. 4) If connections are OK, check the following points. • Resistance — G/W wire and G/Bl wire: less than 1 Ω	Go to Step 2.	Repair or replace the defective wire harness.

	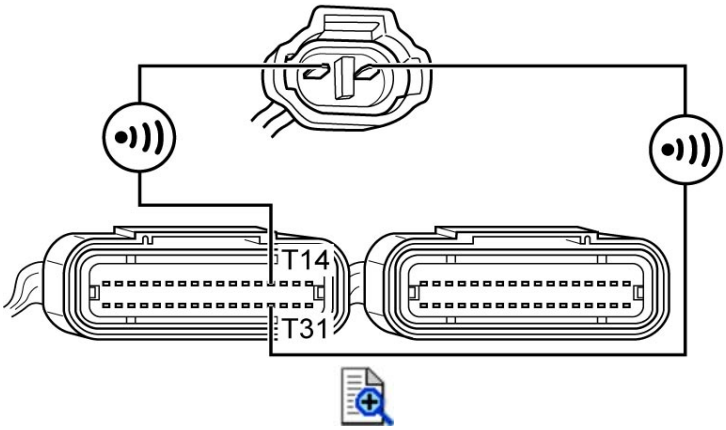 — Between G/W wire and ground: infinity — Between G/Bl wire and ground: infinity 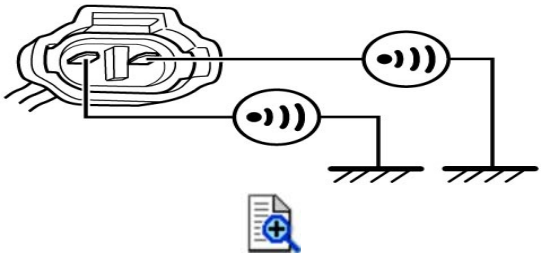 — Between the G/W wire terminal and G/Bl wire terminal at CKP sensor coupler: infinity 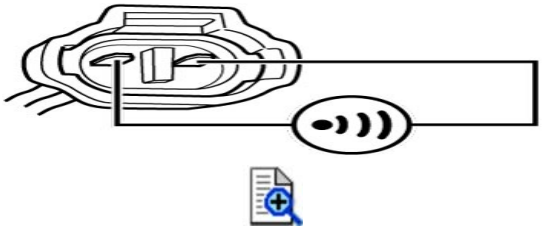 • Voltage — Turn the ignition switch ON. — G/W wire and G/Bl wire: approx. 0 V 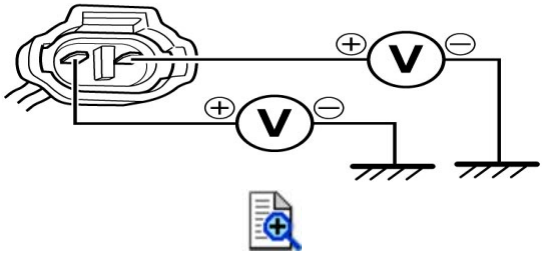 ***Is check result OK?***		
2	**CKP sensor resistance check** 1) Turn the ignition switch OFF. 2) Measure the CKP sensor resistance. Refer to "CKP Sensor Resistance" under ***CKP Sensor Inspection***. ***Is check result OK?***	Go to Step 3.	Replace the CKP sensor with a new one. ☞

3	**CKP sensor peak voltage check** 1) Connect the ECM couplers. 2) Measure the CKP sensor peak voltage with the peak volt adaptor. Refer to "CKP Sensor Peak Voltage" under ***CKP Sensor Inspection***. ***Is check result OK?***	Replace the ECM with a known good one, and inspect it again. ☞	Go to Step 4.
4	**CKP sensor and signal generator rotor check** 1) Turn the ignition switch OFF. 2) Remove the starter clutch. ☞ 3) Check that end face of the CKP sensor (1) and signal generator rotor teeth (2) are free from any metal particles and damage. 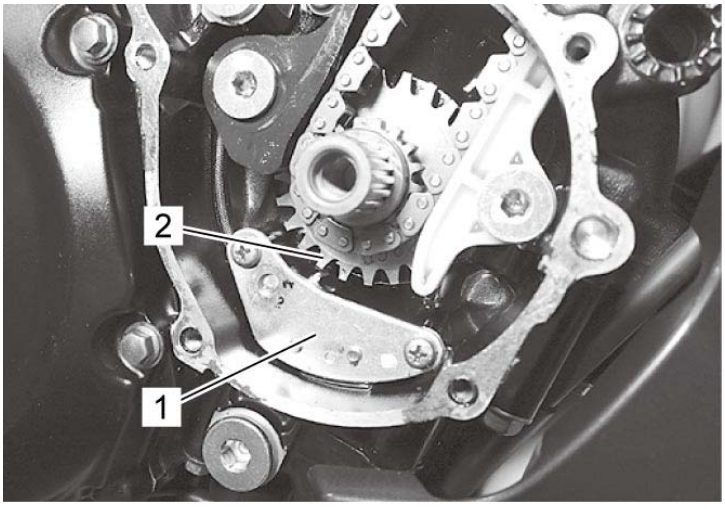 ***Is check result OK?***	Replace the ECM with a known good one, and inspect it again. ☞	Clean or replace defective parts.

DTC P0351 (C24)

DTC Detecting Condition and Trouble Area

DTC detecting condition	Trouble area
P0351 (C24): Ignition System #1 Malfunction Ignition coil #1 signal is interrupted by 8 times or more continuity although CKP signal is detected.	Refer to ***No Spark or Poor Spark***.

DTC P0352 (C25)

DTC Detecting Condition and Trouble Area

DTC detecting condition	Trouble area
P0352 (C25): Ignition System #2 Malfunction Ignition coil #2 signal is interrupted by 8 times or more continuity although CKP signal is detected.	Refer to ***No Spark or Poor Spark***.

DTC P0353 (C26)

DTC Detecting Condition and Trouble Area

DTC detecting condition	Trouble area
P0353 (C26): Ignition System #3 Malfunction Ignition coil #3 signal is interrupted by 8 times or more continuity although CKP signal is detected.	Refer to ***No Spark or Poor Spark***.

DTC P0354 (C27)

DTC Detecting Condition and Trouble Area

DTC detecting condition	Trouble area
P0354 (C27): Ignition System #4 Malfunction Ignition coil #4 signal is interrupted by 8 times or more continuity although CKP signal is detected.	Refer to ***No Spark or Poor Spark***.

DTC P0443 (C62) [If Equipped]

DTC Detecting Condition and Trouble Area

DTC detecting condition	Trouble area
P0443 (C62): EVAP System Purge Control Solenoid Valve Circuit Malfunction EVAP system purge control solenoid valve voltage is not input to ECM.	• EVAP system purge control solenoid valve • EVAP system purge control solenoid valve circuit • ECM

Wiring Diagram

Refer to ***FI System Wiring Diagram***.

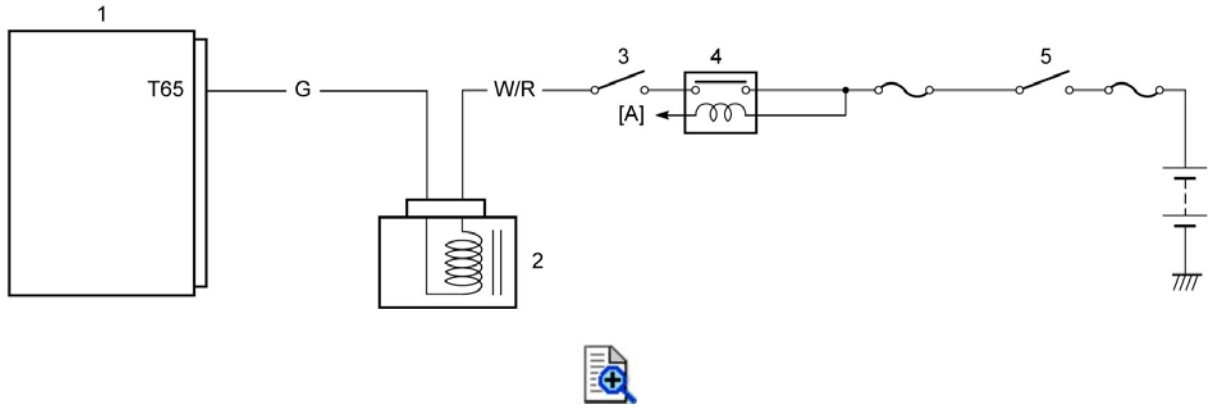

[A]:	To side-stand switch	2.	EVAP system purge control solenoid valve	4.	Side-stand relay
1.	ECM	3.	Engine stop switch	5.	Ignition switch

Troubleshooting

Step	Action	Yes	No
1	**EVAP system purge control solenoid valve power supply voltage check** 1) Turn the ignition switch OFF. 2) Disconnect the EVAP system purge control solenoid valve coupler. ☞ 3) Check for proper terminal connection to the EVAP system purge control solenoid valve coupler. 4) If connections are OK, turn the ignition switch ON. 5) Measure the voltage between the W/R wire and ground. **EVAP system purge control solenoid valve power supply voltage** **[Standard]: Battery voltage**	Go to Step 2.	Repair or replace the W/R wire.

	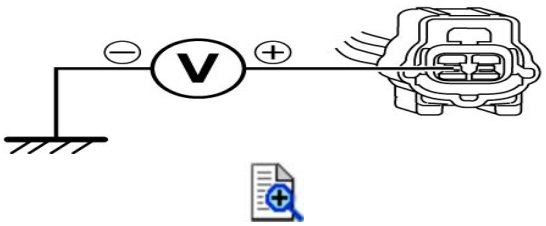 ***Is check result OK?***		
2	**EVAP system purge control solenoid valve driver circuit check** 1) Turn the ignition switch OFF. 2) Disconnect the ECM couplers. ☞ 3) Check for proper terminal connection to the ECM couplers. 4) If connections are OK, check the following points. • Resistance — G wire: less than 1 Ω 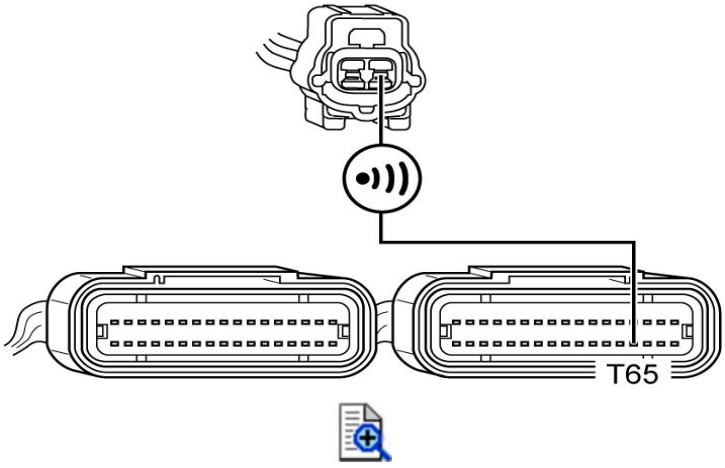 — Between G wire and ground: infinity 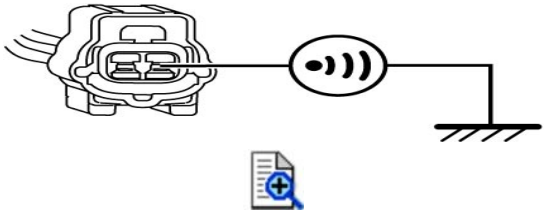 — Between G wire terminal and W/R wire terminal at EVAP system purge control solenoid valve coupler: infinity 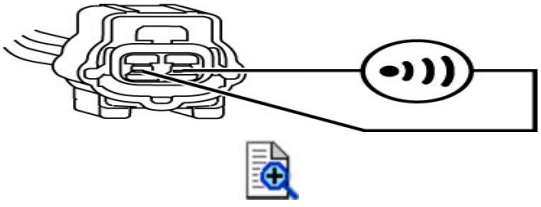 • Voltage — Turn the ignition switch ON.	Go to Step 3.	Repair or replace the G wire.

	— G wire: approx. 0 V 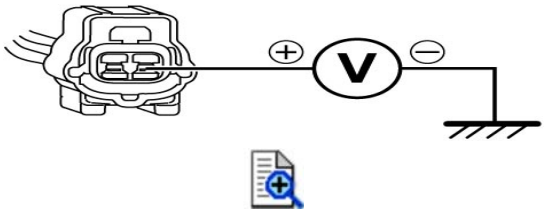 ***Is check result OK?***		
3	**EVAP system purge control solenoid valve resistance check** 1) Turn the ignition switch OFF. 2) Measure the EVAP system purge control solenoid valve resistance. Refer to "EVAP System Purge Control Solenoid Valve" under ***EVAP Control System Inspection (If Equipped)***. ***Is check result OK?***	Replace the ECM with a known good one, and inspect it again. ☞	Replace the EVAP system purge control solenoid valve with a new one. ☞

DTC P0480 (C60)

DTC Detecting Condition and Trouble Area

DTC detecting condition	Trouble area
P0480 (C60): Cooling Fan Relay Malfunction Cooling fan relay signal is not input to ECM.	• Cooling fan relay • Cooling fan relay circuit • ECM

Wiring Diagram

Refer to ***FI System Wiring Diagram***.

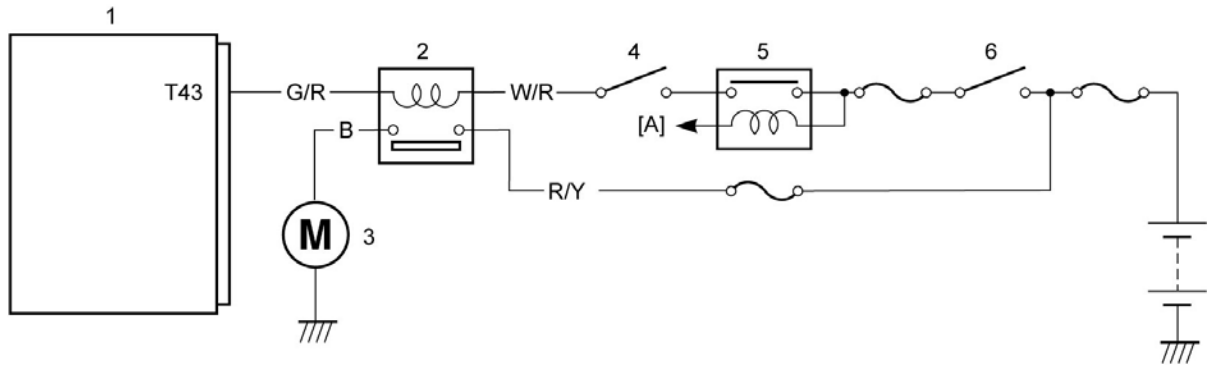

[A]:	To side-stand switch	2.	Cooling fan relay	4.	Engine stop switch	6.	Ignition switch
1.	ECM	3.	Cooling fan motor	5.	Side-stand relay		

Troubleshooting

Step	Action	Yes	No
1	**Cooling fan relay power supply voltage check** 1) Turn the ignition switch OFF. 2) Disconnect the cooling fan relay. 3) Check for proper terminal connection to the cooling fan relay terminal. 4) If connections are OK, turn the ignition switch ON. 5) Measure the voltage between W/R wire and ground. **Cooling fan relay power supply voltage** **[Standard]: Battery voltage**	Go to Step 2.	Repair or replace the W/R wire.

	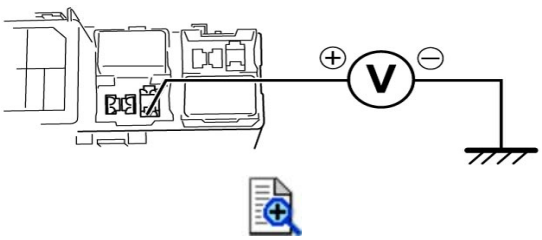 ***Is check result OK?***		
2	**Cooling fan relay check** Check the cooling fan relay. ☞ ***Is check result OK?***	Go to Step 3.	Replace the cooling fan relay with a new one. ☞
3	**Cooling fan relay drive circuit check** 1) Turn the ignition switch OFF. 2) Disconnect the ECM couplers. ☞ 3) Check for proper terminal connection to the ECM couplers. 4) If connections are OK, check the following points. • Resistance — G/R wire: less than 1 Ω 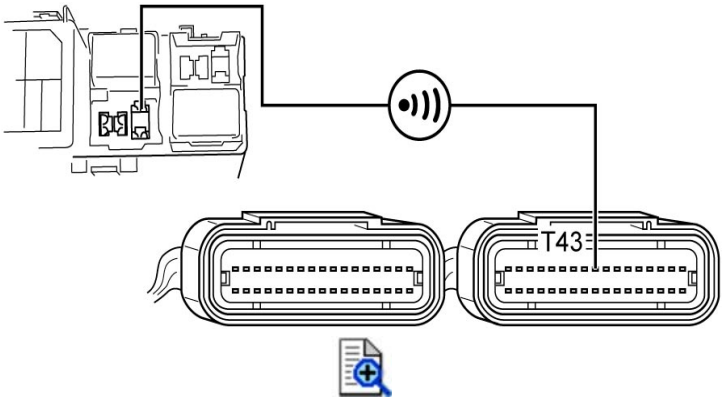 — Between G/R wire and ground: infinity 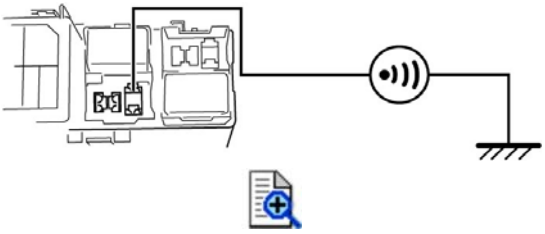 • Voltage — Turn the ignition switch ON. — G/R wire: approx. 0 V 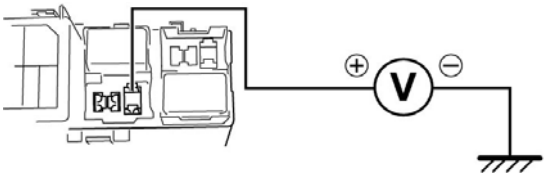	Replace the ECM with a known good one, and inspect it again. ☞	Repair or replace the G/R wire.

	 ***Is check result OK?***		

DTC P0500 (C16) [With ABS]

DTC Detecting Condition and Trouble Area

DTC detecting condition	Trouble area
P0500 (C16): Vehicle Speed Sensor (Front) Circuit Malfunction The speed sensor signal is not input for more than 3 sec.	• Front wheel speed sensor circuit • ECM • ABS control unit

Wiring Diagram

Refer to ***FI System Wiring Diagram***.

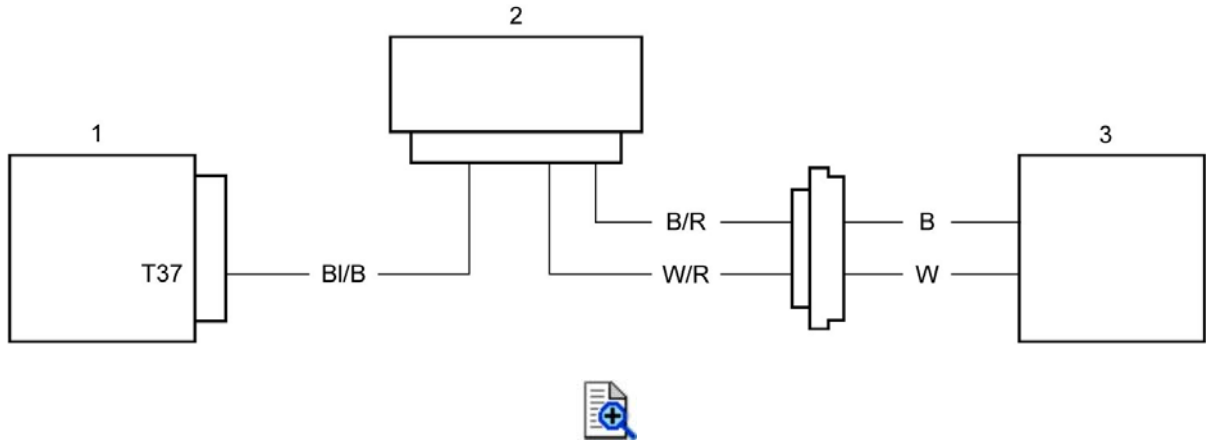

1.	ECM	2.	ABS control unit	3.	Front wheel speed sensor

Troubleshooting

Step	Action	Yes	No
1	**ABS DTC check** 1) Check the DTC of ABS. ☞ ***Is the DTC C1641 (41) or C1642 (42) indicate?***	Go to DTC C1641 (41) or C1642 (42). Refer to ***DTC C1641 (41)*** or ***DTC C1642 (42)***.	Go to Step 2.
2	**Speed sensor signal circuit check (From ABS control unit to ECM)** 1) Turn the ignition switch OFF. 2) Disconnect the ABS control unit coupler and ECM couplers. • ABS control unit: ☞ • ECM: ☞ 3) Check for proper terminal connection to the ABS control unit coupler and ECM couplers. 4) If connections are OK, check the following points. • Resistance	Replace the ECM with a known good one, and inspect again. ☞	Repair or replace the Bl/B wire.

— Bl/B wire: less than 1 Ω

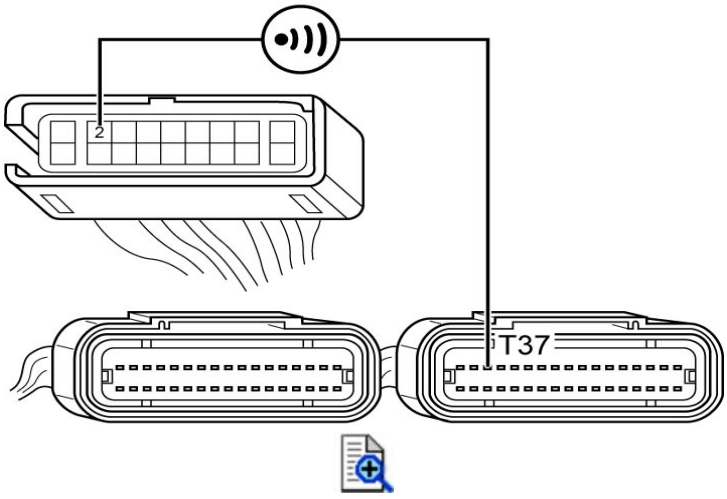

— Bl/B wire and ground: infinity

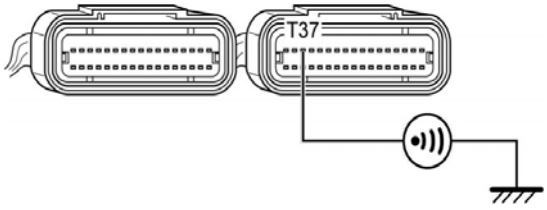

Is check result OK?

DTC P0500 (C16) [Without ABS]

DTC Detecting Condition and Trouble Area

DTC detecting condition	Trouble area
P0500 (C16): Vehicle Speed Sensor (Front) Circuit Malfunction The speed sensor signal is not input for more than 3 sec.	• Front wheel speed sensor • Front wheel speed sensor rotor • Front wheel speed sensor circuit • ECM

Wiring Diagram

Refer to ***FI System Wiring Diagram***.

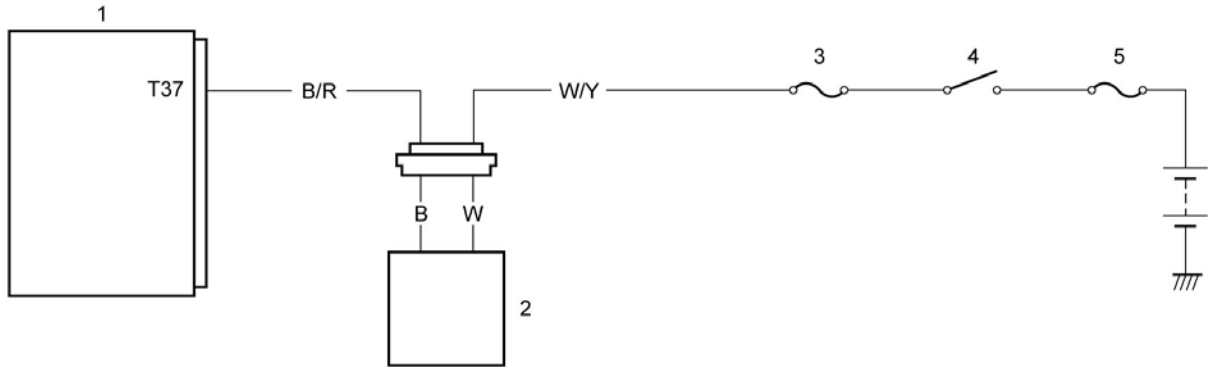

1.	ECM	3.	Signal fuse	5.	Main fuse
2.	Front wheel speed sensor	4.	Ignition switch		

Troubleshooting

Step	Action	Yes	No
1	**Speed sensor power supply voltage check** 1) Turn the ignition switch OFF. 2) Disconnect the front wheel speed sensor coupler. 3) Check for proper terminal connection to the front wheel speed sensor coupler. 4) If connections are OK, turn the ignition switch ON. 5) Measure the voltage between the W/Y wire and ground. **Speed sensor power supply voltage (Without ABS)** **Front [Standard]: Battery voltage**	Go to Step 2.	Repair or replace the W/Y wire.

	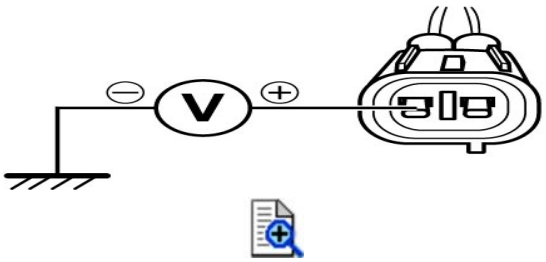 ***Is check result OK?***		
2	**Speed sensor circuit check** 1) Turn the ignition switch OFF. 2) Disconnect the ECM couplers. ☞ 3) Check for proper terminal connection to the ECM couplers. 4) If connections are OK, check the following points. • Resistance — B/R wire: less than 1 Ω 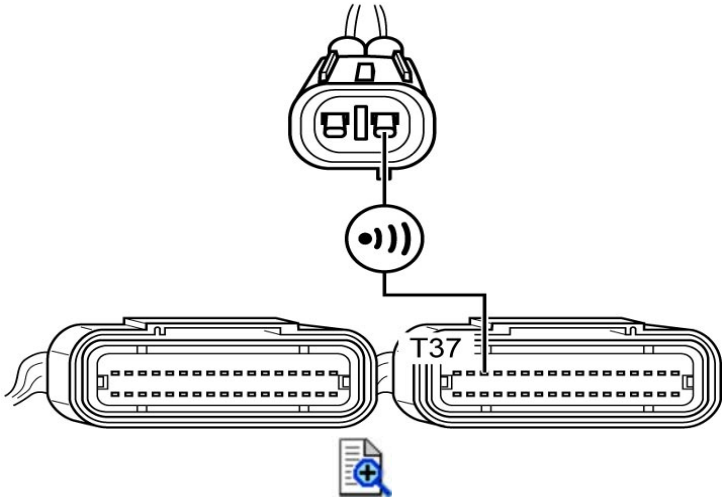 — Between B/R wire and ground: infinity 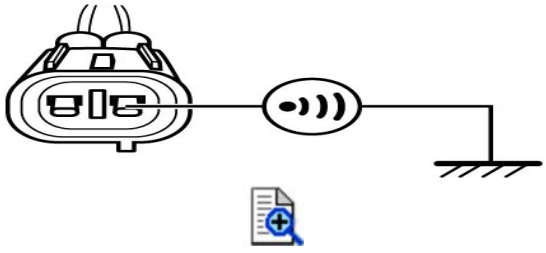 — Between B/R wire terminal and W/Y wire terminal at front wheel speed sensor coupler: infinity 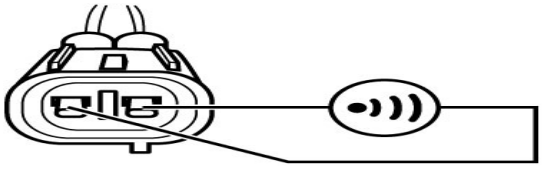	Go to Step 3.	Repair or replace the B/R wire.

	 • Voltage — Turn the ignition switch ON. — B/R wire: approx. 0 V 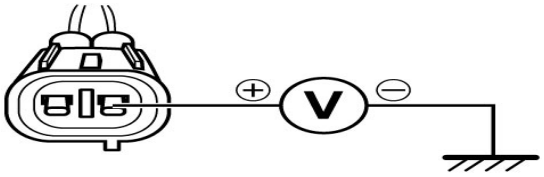  ***Is check result OK?***		
3	**Speed sensor – sensor rotor clearance check** 1) Turn the ignition switch OFF. 2) Inspect the clearance between the front wheel speed sensor and sensor rotor. Refer to "Wheel Speed Sensor – Sensor Rotor Clearance" under ***Wheel Speed Sensor and Sensor Rotor Inspection***. ***Is check result OK?***	Go to Step 4.	Adjust the clearance.
4	**Sensor rotor visual check** 1) Inspect the front wheel speed sensor rotor for damage and check that no foreign objects are caught in the rotor openings. Refer to "Wheel Speed Sensor Rotor" under ***Wheel Speed Sensor and Sensor Rotor Inspection***. ***Is check result OK?***	Go to Step 5.	Clean or replace the sensor rotor. ☞
5	**Speed sensor mounting check** 1) Check that the front wheel speed sensor (1) is mounted securely. 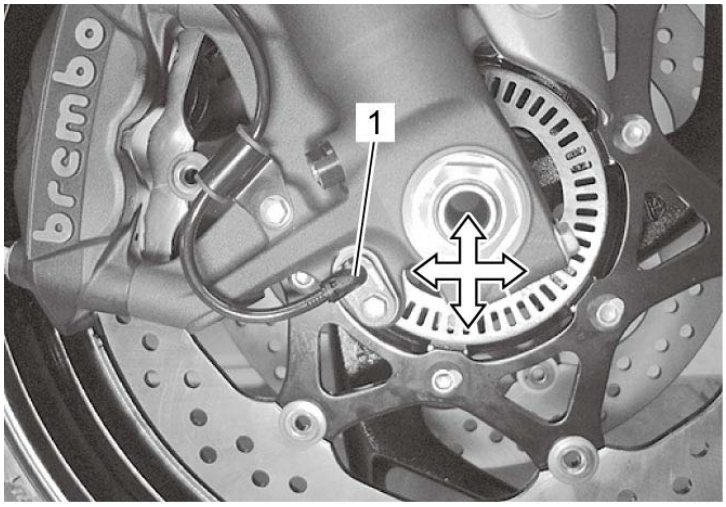	Go to Step 6.	Tighten the mounting bolt.

	 ***Is check result OK?***		
6	**Speed sensor current check** 1) Measure the front wheel speed sensor current. Refer to "Wheel Speed Sensor Current" under ***Wheel Speed Sensor and Sensor Rotor Inspection***. ***Is check result OK?***	Replace the ECM with a known good one, and inspect it again. ☞	Replace the front wheel speed sensor with a new one. ☞

DTC P0505 (C40)

DTC Detecting Condition and Trouble Area

DTC detecting condition	Trouble area
P0505 (C40): ISC Valve Circuit Malfunction The circuit voltage of motor drive is unusual.	• ISC valve • ISC valve circuit • ECM

Wiring Diagram

Refer to ***FI System Wiring Diagram***.

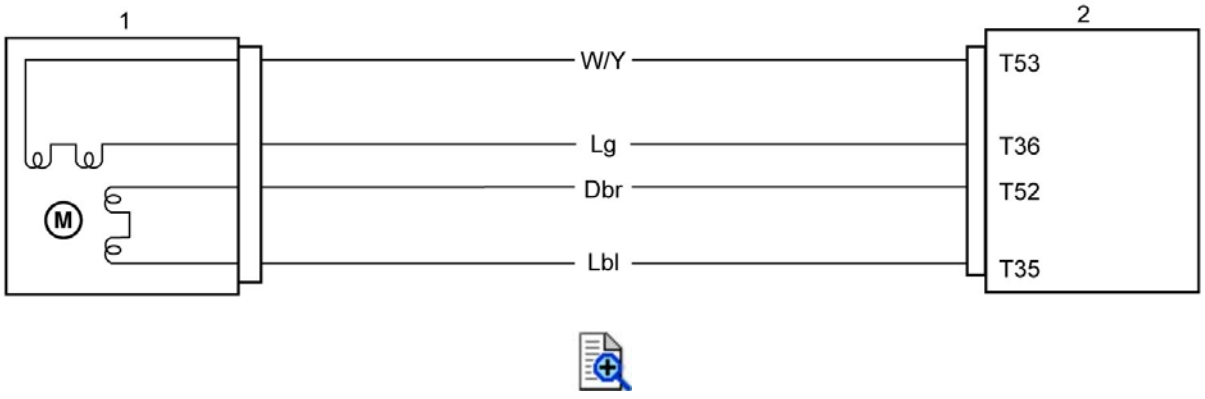

1.	ISC valve	2.	ECM

Troubleshooting

NOTICE:
Be careful not to disconnect the ISC valve coupler at least 5 seconds after ignition switch is turned to OFF.
If the ECM coupler is disconnected within 5 seconds after ignition switch is turned to OFF, there is a possibility of an unusual valve being written in the ECM and causing an error of ISC valve operation.

Step	Action	Yes	No
1	**ISC valve drive circuit check** 1) Turn the ignition switch OFF. 2) Disconnect the ISC valve coupler and ECM couplers. • ISC valve: ☞ • ECM: ☞ 3) Check for proper terminal connection to the ISC valve coupler and ECM couplers. 4) If connections are OK, check the following points. • Resistance — W/Y, Lg, Dbr and Lbl wires: less than 1 Ω	Go to Step 2.	Repair or replace the defective wire harness.

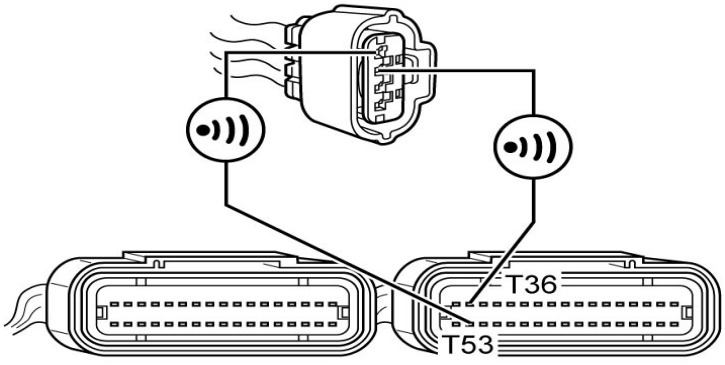

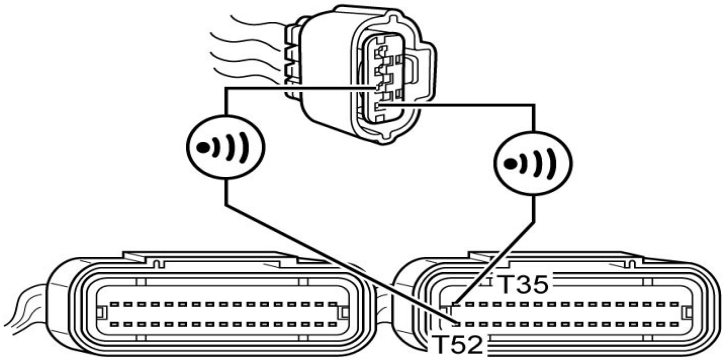

— Between W/Y wire and ground: infinity
— Between Lg wire and ground: infinity
— Between Dbr wire and ground: infinity
— Between Lbl wire and ground: infinity

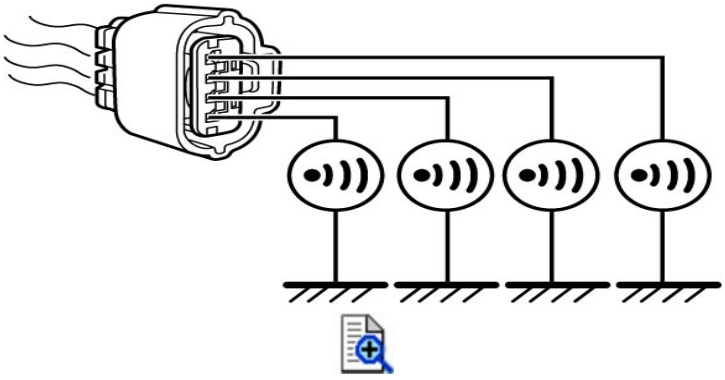

— Between W/Y wire terminal and other terminal at ISC valve coupler: infinity

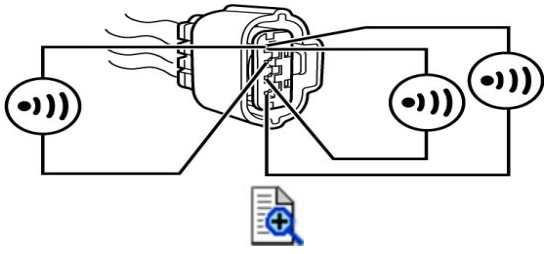

— Between Lg wire terminal and other terminal at ISC valve coupler: infinity

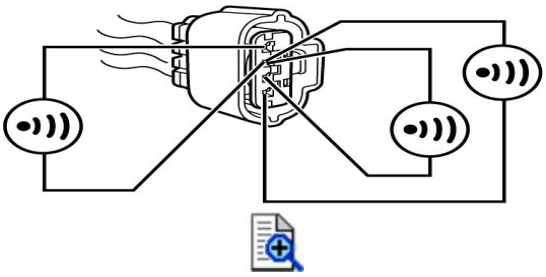

— Between Dbr wire terminal and other terminal at ISC valve coupler: infinity

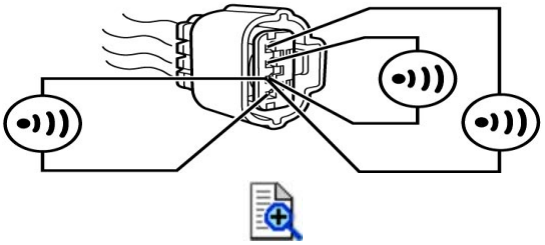

— Between Lbl wire terminal and other terminal at ISC valve coupler: infinity

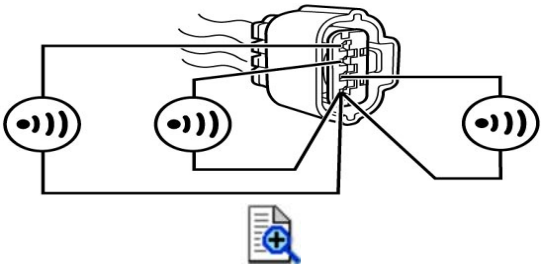

- Voltage
  - — Turn the ignition switch ON.
  - — W/Y, Lg, Dbr and Lbl wires: approx. 0 V

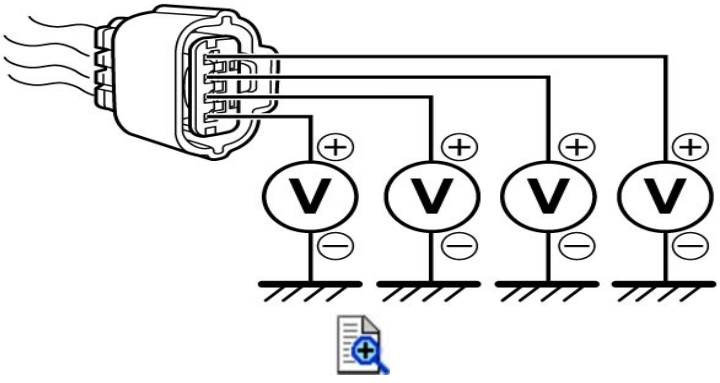

Is check result OK?

2	**ISC valve resistance check** 1) Turn the ignition switch OFF. 2) Measure the ISC valve resistance. ☞ ***Is check result OK?***	Replace the ECM with a known good one, and inspect it again. ☞	Replace the ISC valve with a new one. ☞

DTC P0506 (C65)

DTC Detecting Condition and Trouble Area

DTC detecting condition	Trouble area
P0506 (C65): ISC Valve, Lower Than Desired RPM Idle speed dropped lower than desired idle speed by more than specified range.	• Air passage • ISC valve • Engine mechanism

Troubleshooting

NOTICE:
Be careful not to disconnect the STVA coupler at least 5 seconds after ignition switch is turned to OFF.
If the ECM coupler is disconnected within 5 seconds after ignition switch is turned to OFF, there is a possibility of an unusual value being written in the ECM and causing an error of ISC valve operation.

Step	Action	Yes	No
1	**Engine combustion check** 1) Run the engine at idle speed. 2) By spraying water to exhaust pipes from #1 to #4, check evaporation from each of them to make sure for equal combustion among cylinders. 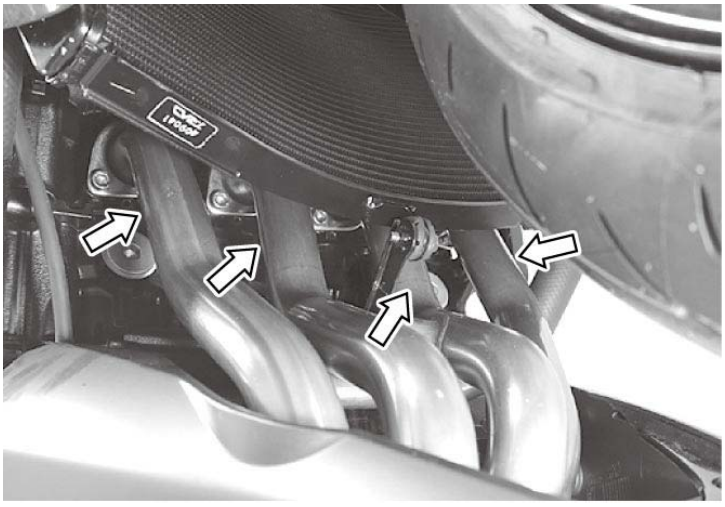 ***Is check result OK?***	Go to Step 2.	Repair or replace defective parts.
2	**ISC valve operation check** 1) Turn the ignition switch OFF. 2) Remove the ISC valve. ☞ 3) Connect the ISC valve coupler (1). 4) Turn the ignition switch ON and then OFF again. 5) While performing above step 4), check that the	Install the ISC valve and go to Step 3. ☞	Replace the ISC valve with a new one. ☞

	ISC valve moves from fully open position to fully closed position. 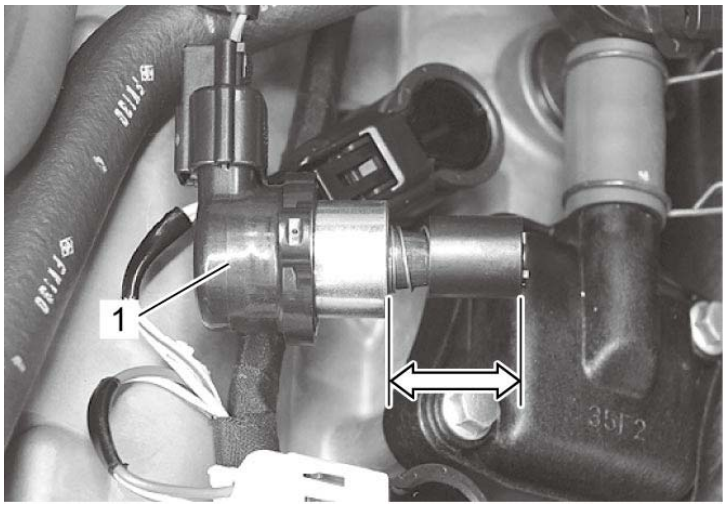 ***Is check result OK?***		
3	**Air intake system check** 1) Check air intake system for clogging and leakage. 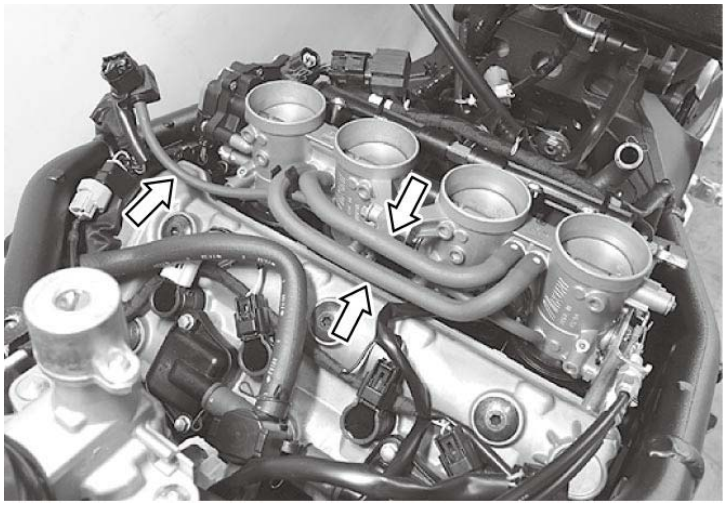	Go to Step 4.	Repair or replace defective parts.

	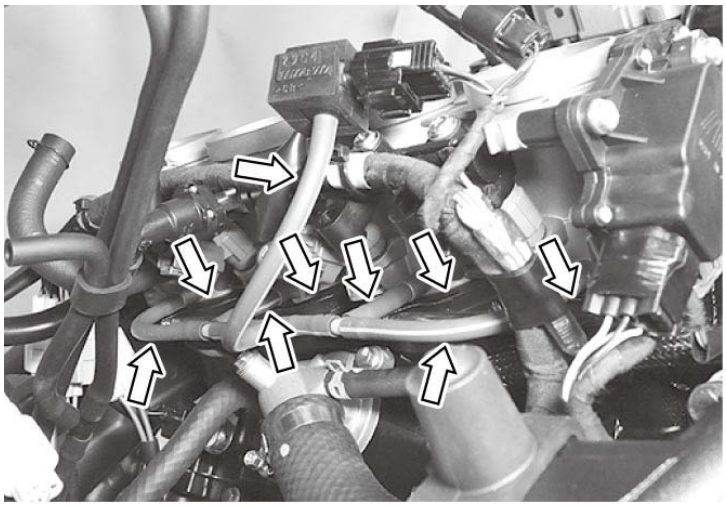 ***Is check result OK?***		
4	**Engine mechanical systems check** 1) Check the following points related to engine mechanical system. • Engine compression: ☞ • Fuel pressure: ☞ ***Is check result OK?***	Replace the ECM with a known good one, and inspect it again. ☞	Repair or replace defective parts.

DTC P0507 (C65)

DTC Detecting Condition and Trouble Area

DTC detecting condition	Trouble area
P0507 (C65): ISC Valve, Higher Than Desired RPM Idle speed rose higher than desired idle speed by more than specified range.	• Air passage • ISC valve • Engine mechanism

Troubleshooting

NOTICE:
Be careful not to disconnect the STVA coupler at least 5 seconds after ignition switch is turned to OFF.
If the ECM coupler is disconnected within 5 seconds after ignition switch is turned to OFF, there is a possibility of an unusual value being written in the ECM and causing an error of ISC valve operation.

Refer to ***DTC P0506 (C65)***.

DTC P0705 (C31)

DTC Detecting Condition and Trouble Area

DTC detecting condition	Trouble area
P0705 (C31): GP Switch Circuit Malfunction Gear position signal voltage is lower than the specified value.	• GP switch • GP switch circuit • ECM

Wiring Diagram

Refer to ***FI System Wiring Diagram***.

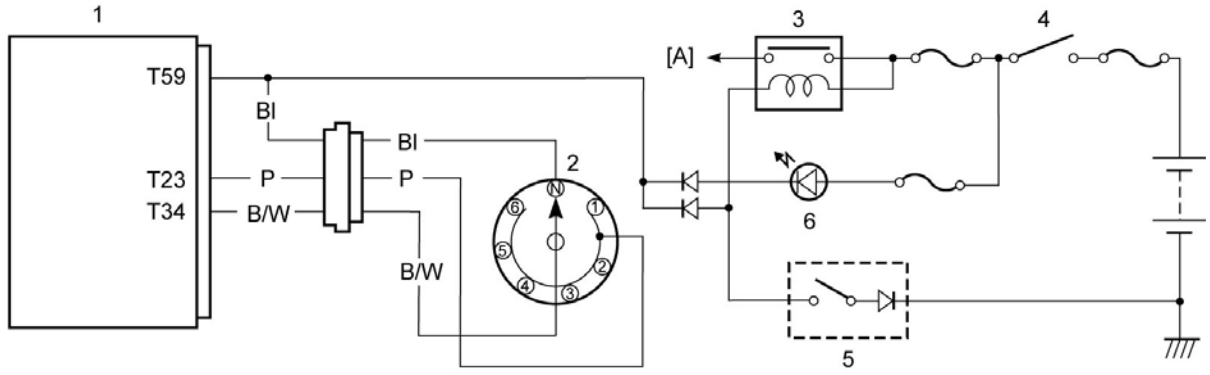

[A]:	To engine stop switch	2.	GP switch	4.	Ignition switch	6.	Neutral indicator light
1.	ECM	3.	Side-stand relay	5.	Side-stand switch		

Troubleshooting

Step	Action	Yes	No
1	**GP switch power supply voltage check** 1) Turn the ignition switch OFF. 2) Disconnect the GP switch coupler. ☞ 3) Support the motorcycle with a jack. 4) Fold the side-stand to up position. 5) Check for proper terminal connection to the GP switch coupler. 6) If connections are OK, turn the ignition switch ON. 7) Measure the voltage between the P wire and ground. 8) If OK, measure the voltage between the P wire and B/W wire. **GP switch power supply voltage**	Go to Step 3.	Go to Step 2.

	[Standard]: 4.5 – 5.5 V 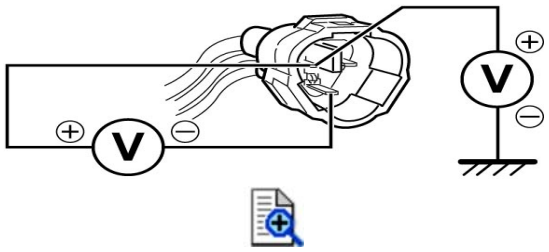 ***Is check result OK?***		
2	**GP switch circuit check** 1) Turn the ignition switch OFF. 2) Disconnect the ECM couplers. ☞ 3) Check for proper terminal connection to the ECM couplers. 4) If connections are OK, check the following points. • Resistance — P wire and B/W wire: less than 1 Ω 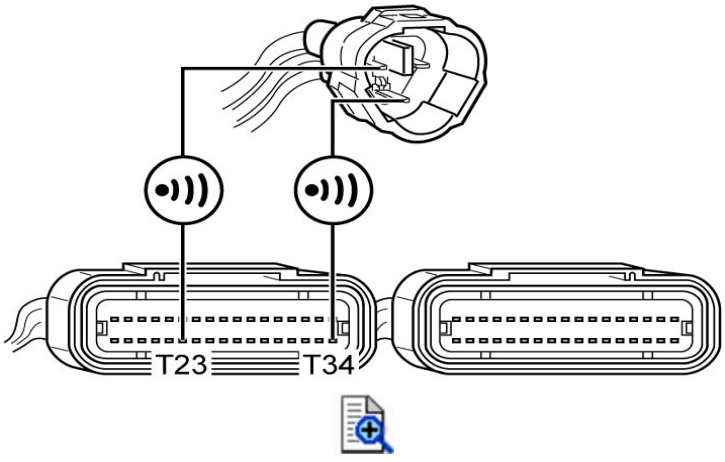 — Between P wire and ground: infinity — Between B/W wire and ground: infinity 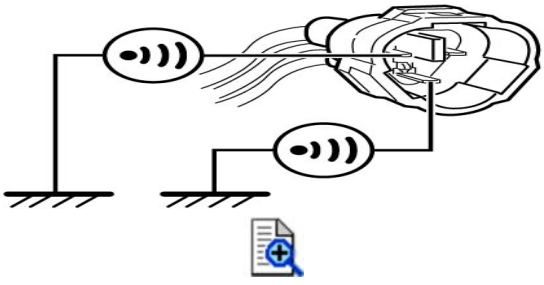 — Between P wire terminal and other terminal at GP switch coupler: infinity	Replace the ECM with a known good one, and inspect it again. ☞	Repair or replace the defective wire harness.

	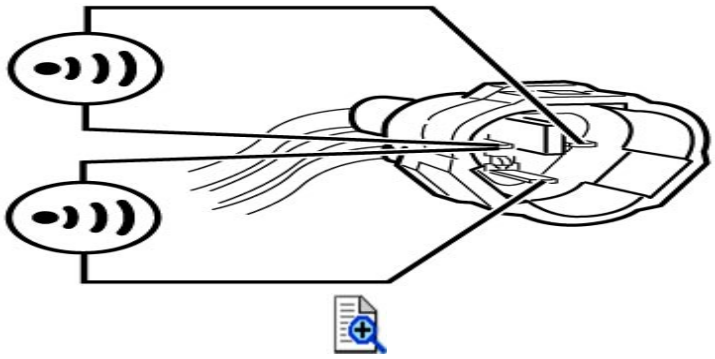 • Voltage — Turn the ignition switch ON. — P wire and B/W wire: approx. 0 V 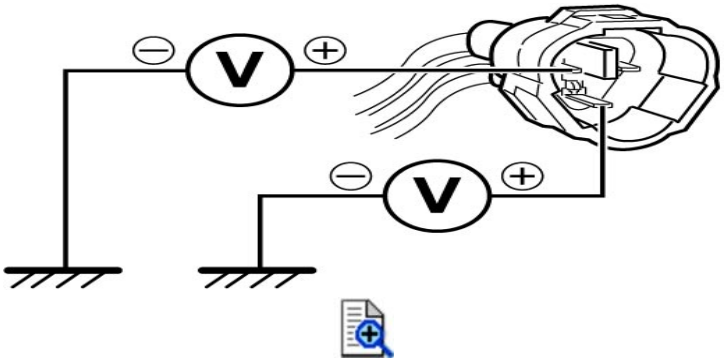 ***Is check result OK?***		
3	**GP switch voltage check** 1) Turn the ignition switch OFF. 2) Connect the ECM couplers. 3) Measure the GP switch voltage. Refer to "GP Switch" under ***Starter Interlock System Parts Inspection***. ***Is check result OK?***	Replace the ECM with a known good one, and inspect it again. ☞	Replace the GP switch with a new one. ☞

DTC P1500 (C91) [With ABS]

DTC Detecting Condition and Trouble Area

DTC detecting condition	Trouble area
P1500 (C91): Vehicle Speed Sensor (Rear) Circuit Malfunction The speed sensor signal is not input for more than 3 sec.	• Rear wheel speed sensor circuit • ECM • ABS control unit

Wiring Diagram

Refer to ***FI System Wiring Diagram***.

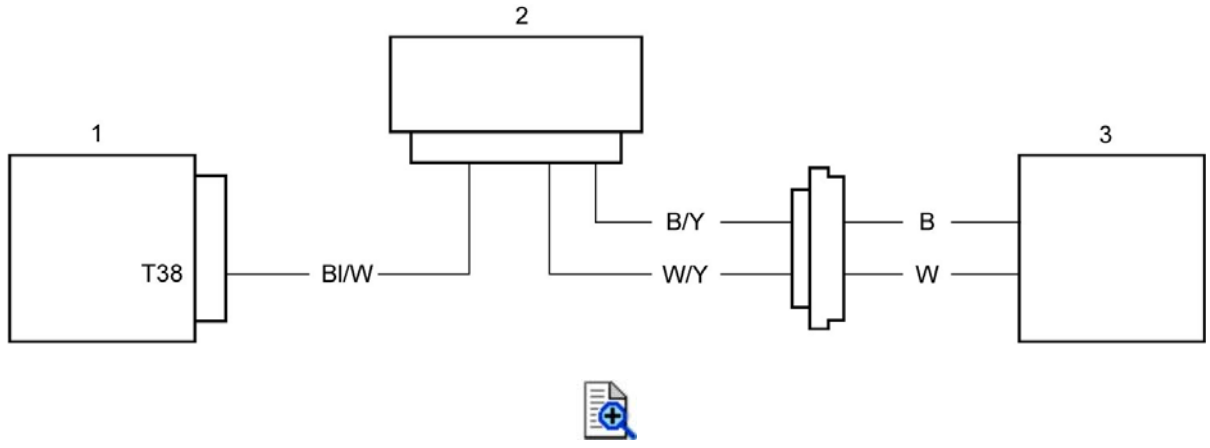

1.	ECM	2.	ABS control unit	3.	Rear wheel speed sensor

Troubleshooting

Step	Action	Yes	No
1	**ABS DTC check** 1) Check the DTC of ABS. ☞ ***Is the DTC C1644 (44) or C1645 (45) indicate?***	Go to DTC C1644 (44) or C1645 (45). Refer to ***DTC C1644 (44)*** or ***DTC C1645 (45)***.	Go to Step 2.
2	**Speed sensor signal circuit check (From ABS control unit to ECM)** 1) Turn the ignition switch OFF. 2) Disconnect the ABS control unit coupler and ECM couplers. • ABS control unit: ☞ • ECM: ☞ 3) Check for proper terminal connection to the ABS control unit coupler and ECM couplers. 4) If connections OK, check the following points. • Resistance	Replace the ECM with a known good one, and inspect again. ☞	Repair or replace the Bl/W wire.

— Bl/W wire: less than 1 Ω

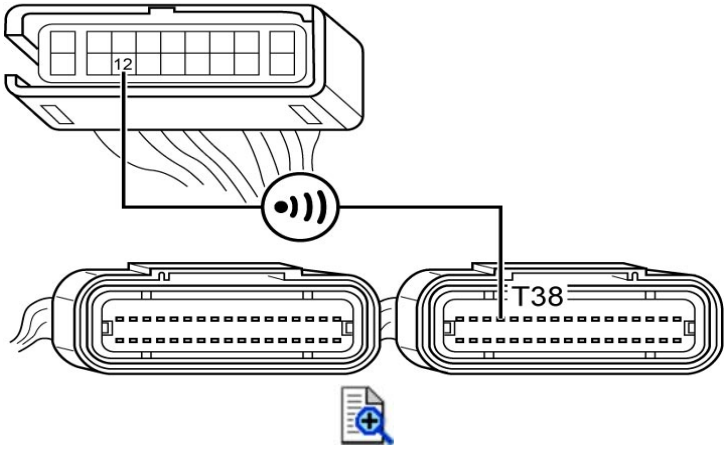

— Bl/W wire and ground: infinity

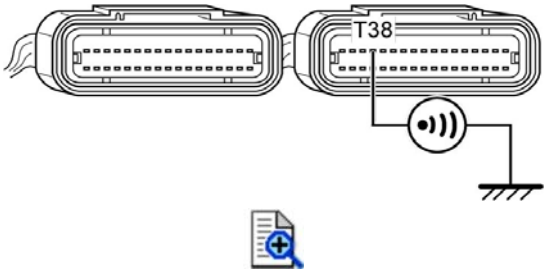

Is check result OK?

DTC P1500 (C91) [Without ABS]

DTC Detecting Condition and Trouble Area

DTC detecting condition	Trouble area
P1500 (C91): Vehicle Speed Sensor (Rear) Circuit Malfunction The speed sensor signal is not input for more than 3 sec.	• Rear wheel speed sensor • Rear wheel speed sensor rotor • Rear wheel speed sensor circuit • ECM

Wiring Diagram

Refer to ***FI System Wiring Diagram***.

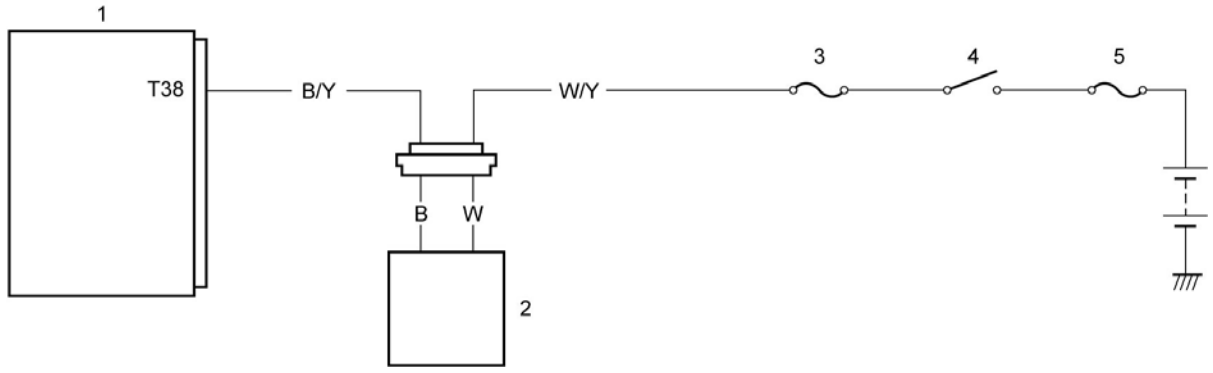

1.	ECM	3.	Signal fuse	5.	Main fuse
2.	Rear wheel speed sensor	4.	Ignition switch		

Troubleshooting

Step	Action	Yes	No
1	**Speed sensor power supply voltage check** 1) Turn the ignition switch OFF. 2) Disconnect the rear wheel speed sensor coupler. 3) Check for proper terminal connection to the rear wheel speed sensor coupler. 4) If connections are OK, turn the ignition switch ON. 5) Measure the voltage between the W/Y wire and ground. **Speed sensor power supply voltage (Without ABS)** **Rear [Standard]: Battery voltage**	Go to Step 2.	Repair or replace the W/Y wire.

	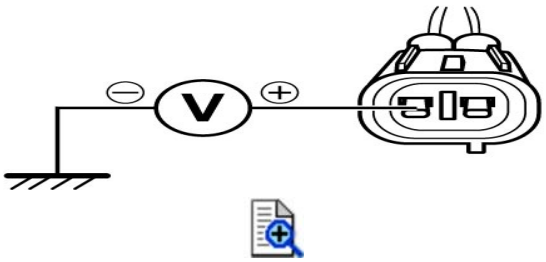 ***Is check result OK?***		
2	**Speed sensor circuit check** 1) Turn the ignition switch OFF. 2) Disconnect the ECM couplers. ☞ 3) Check for proper terminal connection to the ECM couplers. 4) If connections are OK, check the following points. • Resistance — B/Y wire: less than 1 Ω 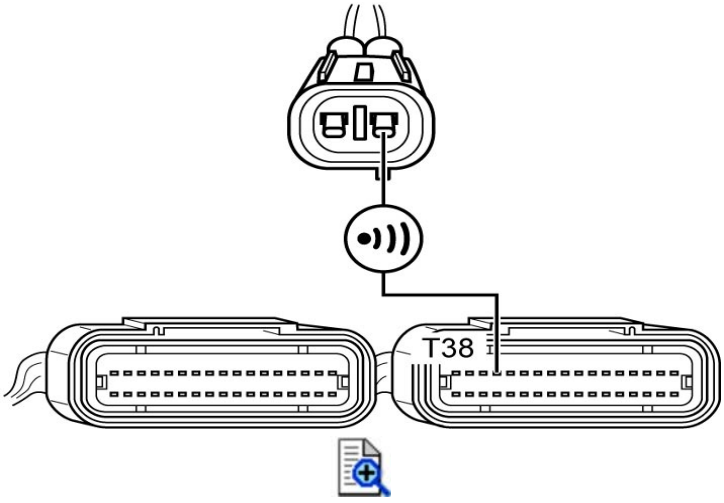 — Between B/Y wire and ground: infinity 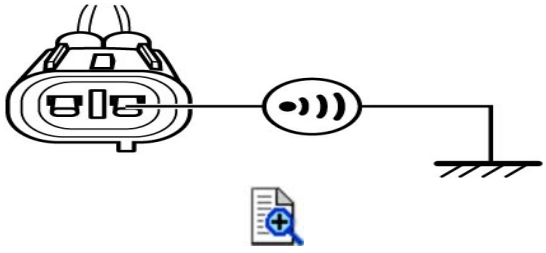 — Between B/Y wire terminal and W/Y wire terminal at rear wheel speed sensor coupler: infinity 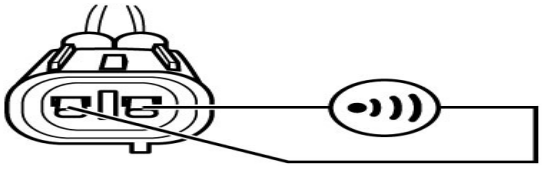	Go to Step 3.	Repair or replace the B/Y wire.

	 • Voltage — Turn the ignition switch ON. — B/Y wire: approx. 0 V 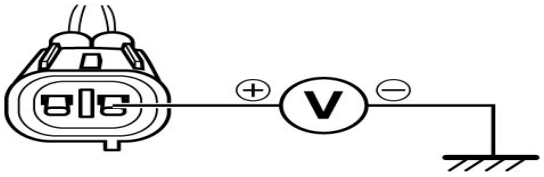  ***Is check result OK?***		
3	**Speed sensor – sensor rotor clearance** 1) Turn the ignition switch OFF. 2) Inspect the clearance between the rear wheel speed sensor and sensor rotor. Refer to "Wheel Speed Sensor – Sensor Rotor Clearance" under ***Wheel Speed Sensor and Sensor Rotor Inspection***. ***Is check result OK?***	Go to Step 4.	Adjust the clearance.
4	**Sensor rotor visual check** 1) Inspect the rear wheel speed sensor rotor for damage and check that no foreign objects are caught in the rotor openings. Refer to "Wheel Speed Sensor Rotor" under ***Wheel Speed Sensor and Sensor Rotor Inspection***. ***Is check result OK?***	Go to Step 5.	Clean or replace the sensor rotor. ☞
5	**Speed sensor mounting check** 1) Check that the rear wheel speed sensor (1) is mounted securely. 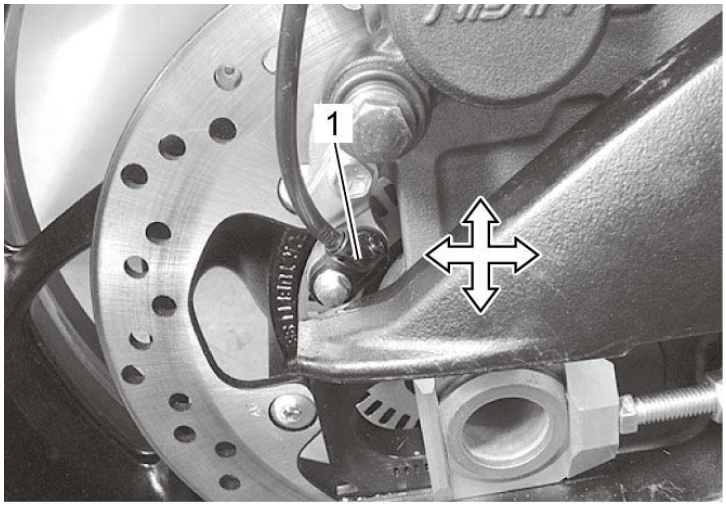	Go to Step 6.	Tighten the mounting bolt.

	 ***Is check result OK?***		
6	**Speed sensor current check** 1) Measure the rear wheel speed sensor current. Refer to "Wheel Speed Sensor Current" under ***Wheel Speed Sensor and Sensor Rotor Inspection***. ***Is check result OK?***	Replace the ECM with a known good one, and inspect it again. ☞	Replace the rear wheel speed sensor with a new one. ☞

DTC P1650 (C42)

DTC Detecting Condition and Trouble Area

DTC detecting condition	Trouble area
P1650 (C42): IG Switch Circuit Malfunction Ignition switch signal is not input to the ECM. When the ID agreement is not verified. (With immobilizer system) ECM does not receive communication signal from the immobilizer antenna. (With immobilizer system)	• Ignition switch • ECM • Immobilizer system (If equipped) • Immobilizer system circuit (If equipped)

Troubleshooting

Refer to ***Ignition Switch Inspection*** for details.

DTC P1651-H / P1651-L (C23)

DTC Detecting Condition and Trouble Area

DTC detecting condition	Trouble area
P1651-H (C23): TO Sensor Circuit High Voltage The sensor output voltage is higher than 4.80 V.	• TO sensor • TO sensor circuit • ECM
P1651-L (C23): TO Sensor Circuit Low Voltage The sensor output voltage is lower than 0.20 V.	

Wiring Diagram

Refer to ***FI System Wiring Diagram***.

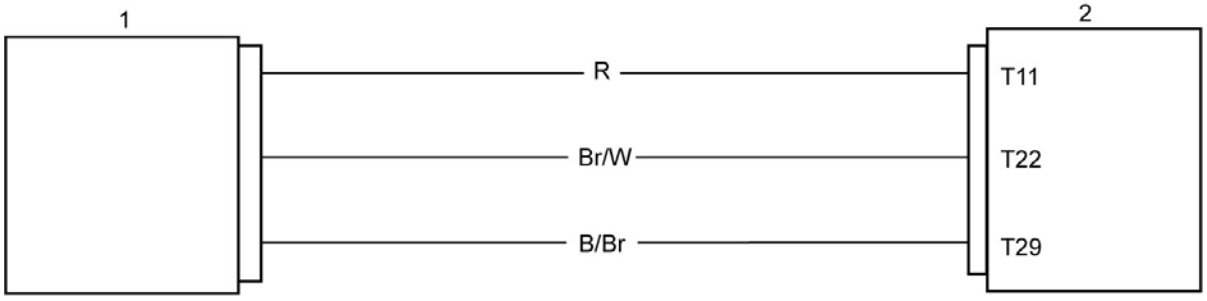

1.	TO sensor	2.	ECM

Troubleshooting

Step	Action	Yes	No
1	**TO sensor power supply circuit check** 1) Turn the ignition switch OFF. 2) Disconnect the TO sensor coupler. ☞ 3) Check for proper terminal connection to the TO sensor coupler. 4) If connections are OK, turn the ignition switch ON. 5) Measure the voltage between the R wire and B/Br wire. **TO sensor power supply voltage** **[Standard]: 4.5 – 5.5 V**	Go to Step 3.	Go to Step 2.

	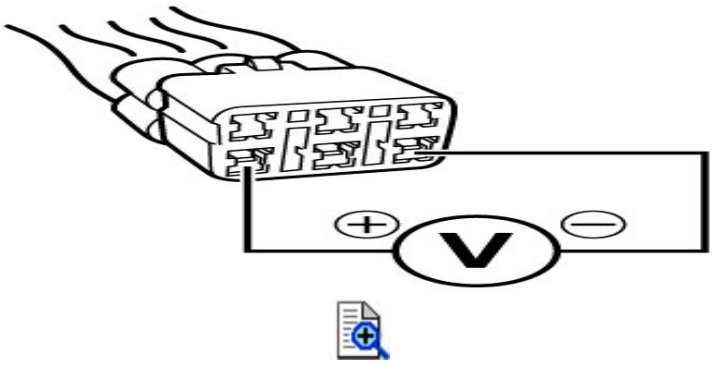 ***Is check result OK?***		
2	**TO sensor ground circuit check** 1) Measure the voltage between the R wire and ground. 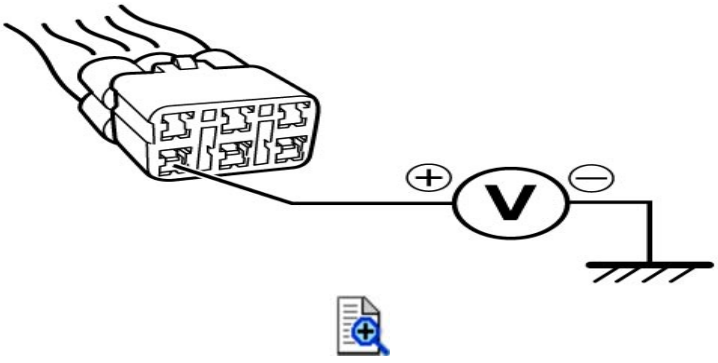 ***Is voltage same as Step 1?***	Repair or replace the B/Br wire.	Repair or replace the R wire.
3	**TO sensor signal circuit check** 1) Turn the ignition switch OFF. 2) Disconnect the ECM couplers. ☞ 3) Check for proper terminal connection to the ECM couplers. 4) If connections are OK, check the following points. • Resistance — Br/W wire: less than 1 Ω 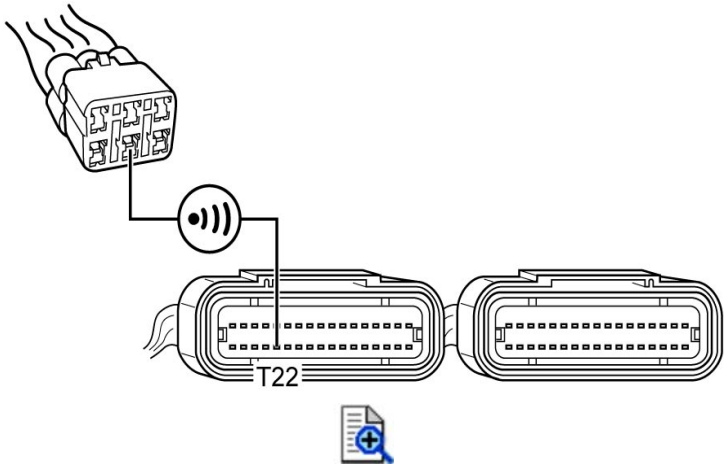	Go to Step 4.	Repair or replace the Br/W wire.

	— Between Br/W wire and ground: infinity 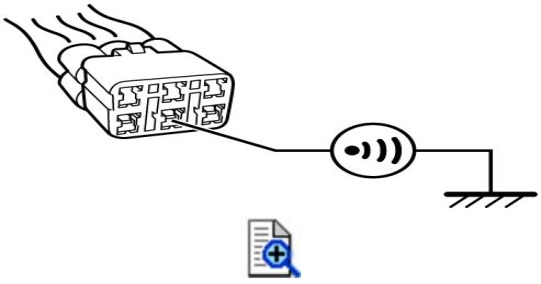 — Between Br/W wire terminal and other terminal at TO sensor coupler: infinity 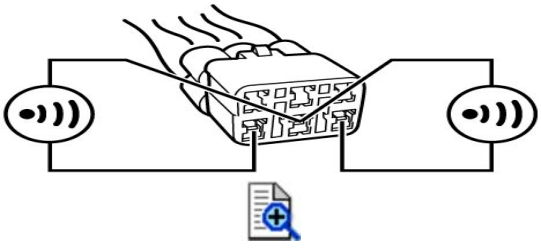 • Voltage — Turn the ignition switch ON. — Br/W wire: approx. 0 V 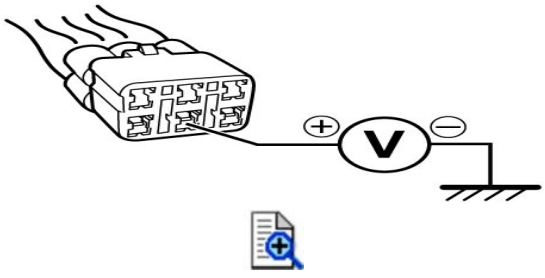 ***Is check result OK?***		
4	**TO sensor output voltage check** 1) Turn the ignition switch OFF. 2) Connect the ECM couplers and TO sensor coupler. 3) Measure the TO sensor output voltage. Refer to "TO Sensor Output Voltage" under ***TO Sensor Inspection***. ***Is check result OK?***	Replace the ECM with a known good one, and inspect it again. ☞	Replace the TO sensor with a new one. ☞

DTC P1654-H / P1654-L (C29)

DTC Detecting Condition and Trouble Area

DTC detecting condition	Trouble area
P1654-H (C29): STP Sensor Circuit High Voltage The sensor output voltage is higher than 4.85 V.	• STP sensor • STP sensor circuit • ECM
P1654-L (C29): STP Sensor Circuit Low Voltage The sensor output voltage is lower than 0.15 V.	

Wiring Diagram

Refer to ***FI System Wiring Diagram***.

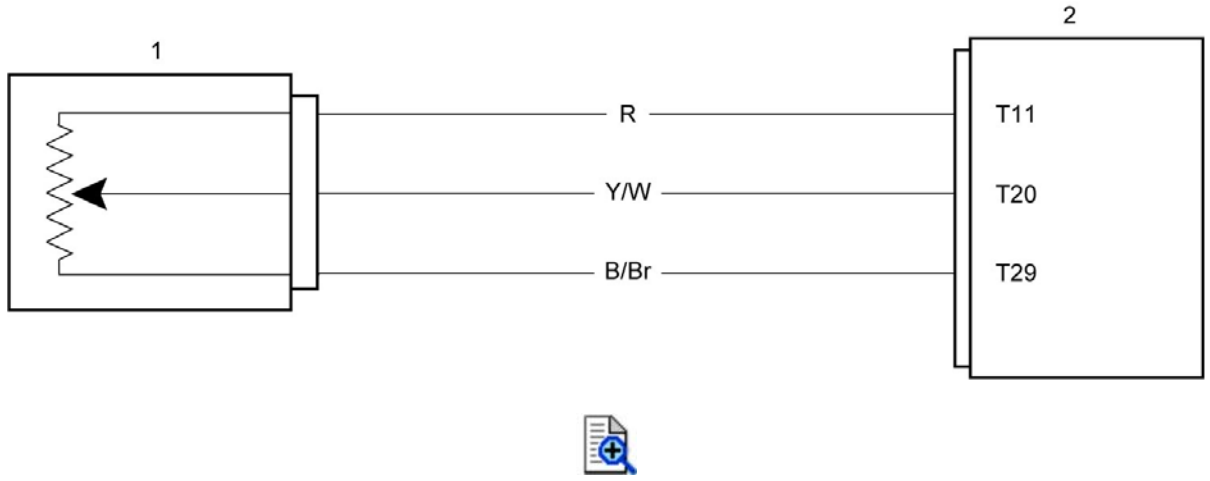

1.	STP sensor	2.	ECM

Troubleshooting

Step	Action	Yes	No
1	**STP sensor power supply circuit check** 1) Turn the ignition switch OFF. 2) Disconnect the STP sensor coupler. ☞ 3) Check for proper terminal connection to the STP sensor coupler. 4) If connections are OK, turn the ignition switch ON. 5) Measure the voltage between the R wire and B/Br wire. **STP sensor power supply voltage** **[Standard]: 4.5 – 5.5 V**	Go to Step 3.	Go to Step 2.

	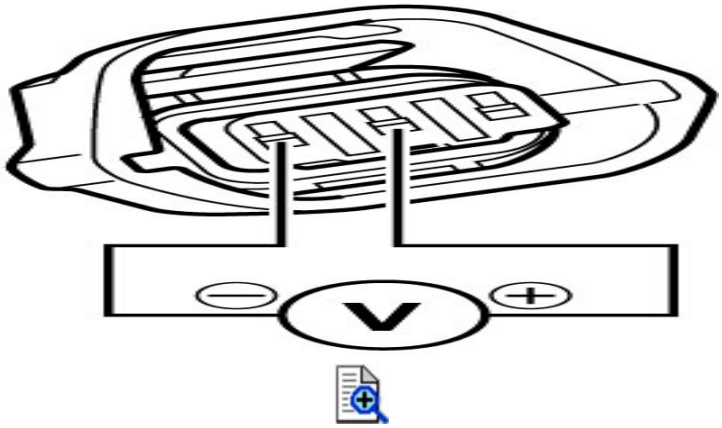 ***Is check result OK?***		
2	**STP sensor ground circuit check** 1) Measure the voltage between the R wire and ground. 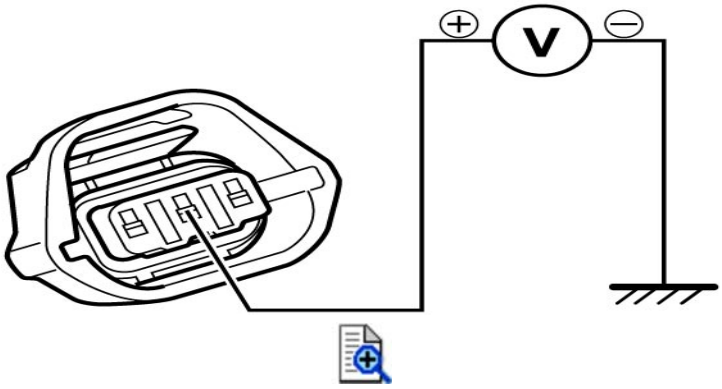 ***Is voltage same as Step 1?***	Repair or replace the B/Br wire.	Repair or replace the R wire.
3	**STP sensor signal circuit check** 1) Turn the ignition switch OFF. 2) Disconnect the ECM couplers. ☞ 3) Check for proper terminal connection to the ECM couplers. 4) If connections are OK, check the following points. • Resistance — Y/W wire: less than 1 Ω 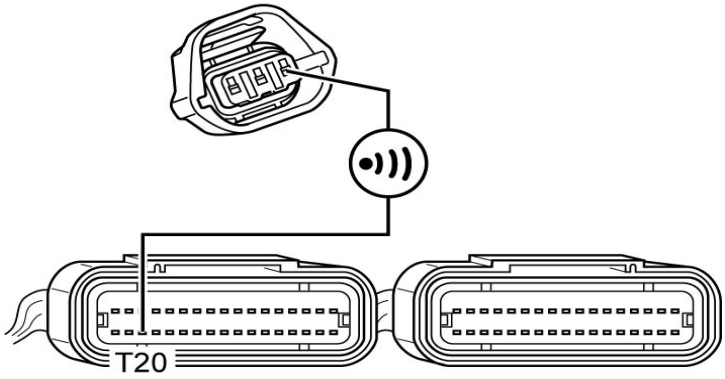 	Go to Step 4.	Repair or replace the Y/W wire.

— Between Y/W wire and ground: infinity

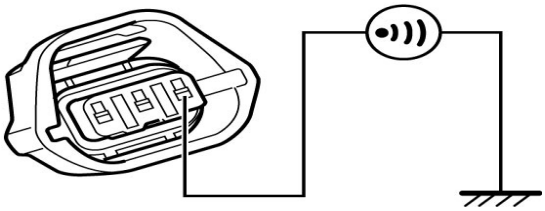

— Between Y/W wire terminal and other terminal at STP sensor coupler: infinity

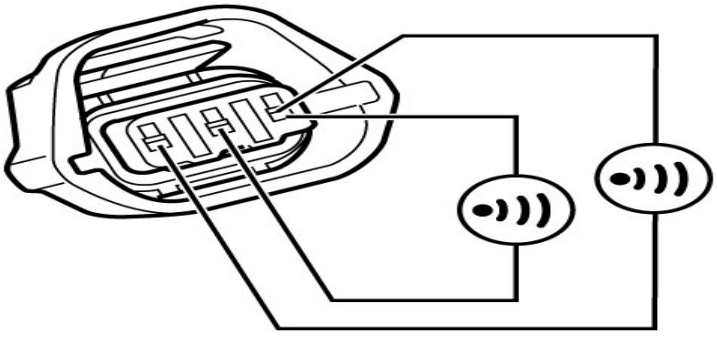

- Voltage
  — Turn the ignition switch ON.
  — Y/W wire: approx. 0 V

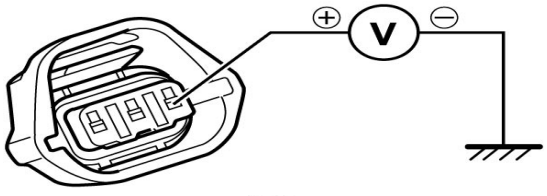

Is check result OK?

4	**STP sensor output voltage check** 1) Turn the ignition switch OFF. 2) Remove the air cleaner box. ☞ 3) Connect the ECM couplers. 4) Disconnect the STVA coupler and measure the STP sensor output voltage. ☞ ***Is check result OK?***	Replace the ECM with a known good one, and inspect it again. ☞	Replace the STP sensor with a new one. ☞

DTC P1655 (C28)

DTC Detecting Condition and Trouble Area

DTC detecting condition	Trouble area
P1655 (C28): STVA Circuit Malfunction STVA control signal is not supplied from the ECM. ECM does not receive communication signal from the STVA or operation voltage does not reach STVA.	• STVA • STVA circuit • ECM

Wiring Diagram

Refer to ***FI System Wiring Diagram***.

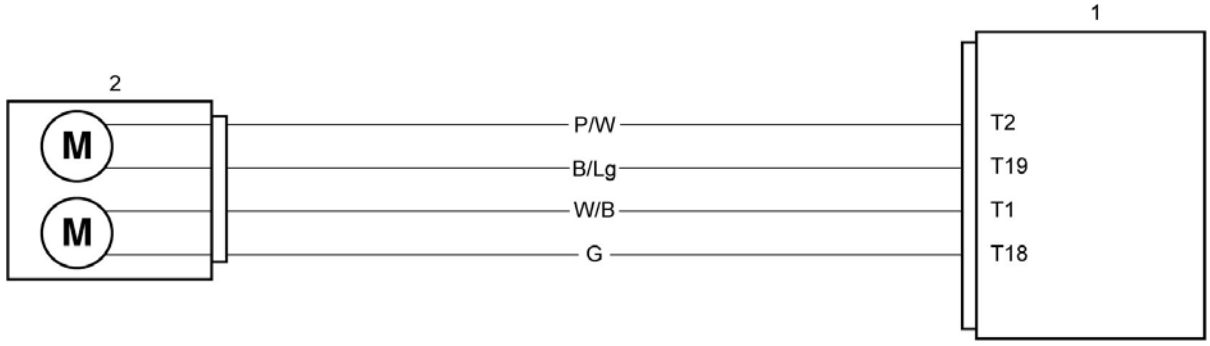

1.	ECM	2.	STVA

Troubleshooting

Step	Action	Yes	No
1	**STVA circuit check** 1) Turn the ignition switch OFF. 2) Disconnect the STVA coupler and ECM couplers. • STVA: ☞ • ECM: ☞ 3) Check for proper terminal connection to the STVA coupler and ECM couplers. 4) If connections are OK, check the following points. • Resistance — P/W, B/Lg, W/B and G wires: less than 1 Ω	Go to Step 2.	Repair or replace the defective wire harness.

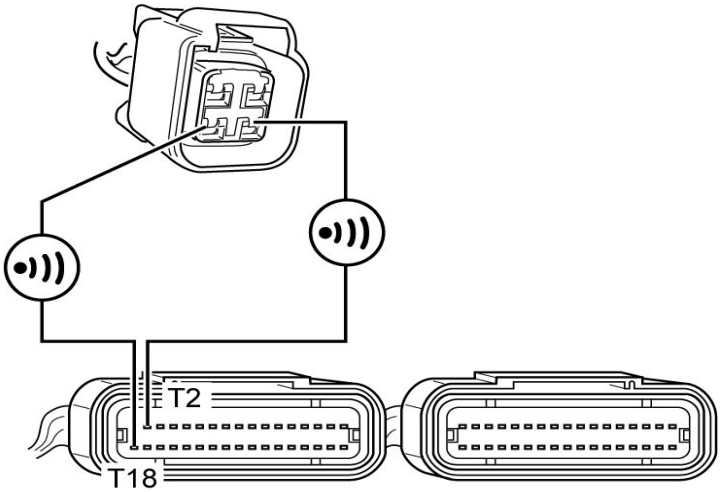

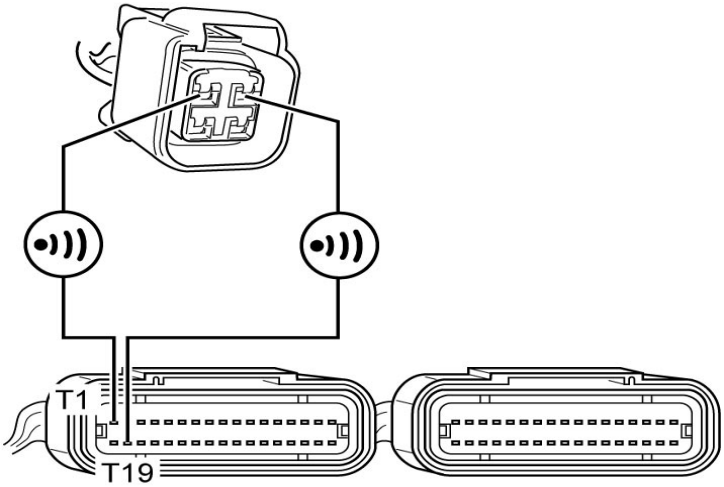

— Between P/W wire and ground: infinity
— Between B/Lg wire and ground: infinity
— Between W/B wire and ground: infinity
— Between G wire and ground: infinity



— Between P/W wire terminal and other terminal at STVA coupler: infinity

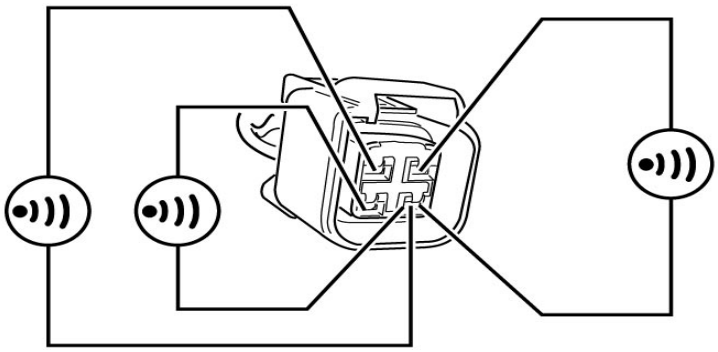

— Between B/Lg wire terminal and other terminal at STVA coupler: infinity

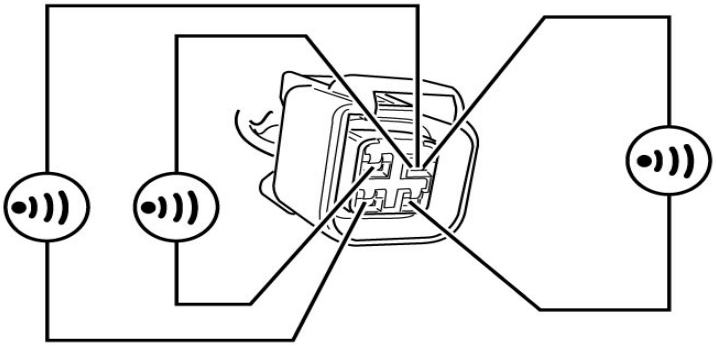

— Between W/B wire terminal and other terminal at STVA coupler: infinity

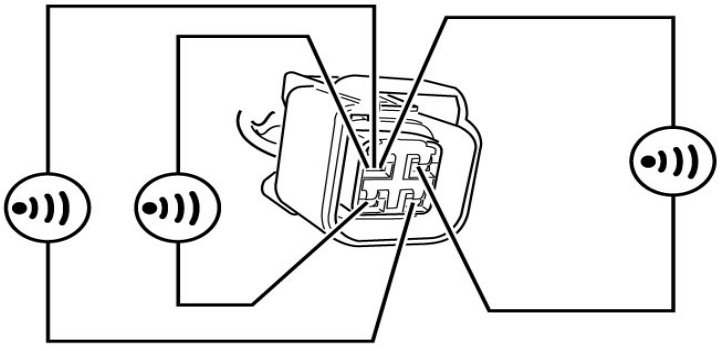

— Between G wire terminal and other terminal at STVA coupler: infinity

<table>
<tr><td></td><td>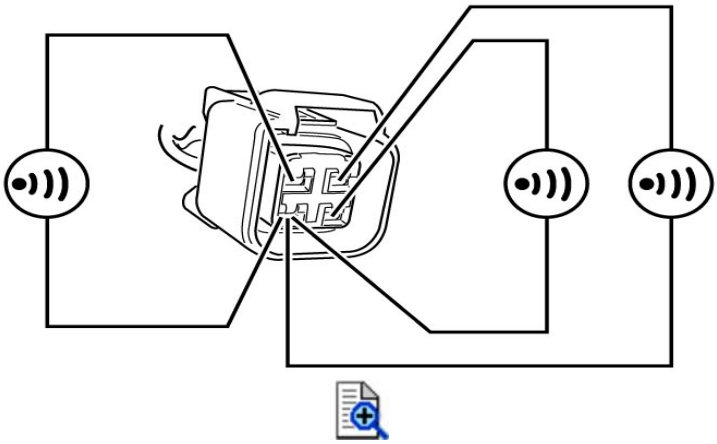

Voltage

— Turn the ignition switch ON.

— P/W, B/Lg, W/B and G wires: approx. 0 V

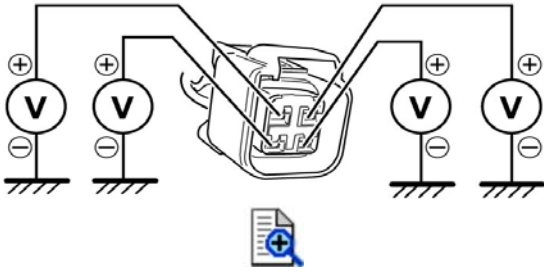
Is check result OK?</td><td></td><td></td></tr>
<tr><td>2</td><td>STVA resistance check
1) Turn the ignition switch OFF.
2) Measure the STVA resistance. ☞
Is check result OK?</td><td>Go to Step 3.</td><td>Replace the throttle body assembly with a new one. ☞</td></tr>
<tr><td>3</td><td>STV operation check
1) Remove the air cleaner box cover. ☞
2) Connect the STVA coupler and ECM couplers.
3) Check whether the STVs open by turning the ignition switch ON.
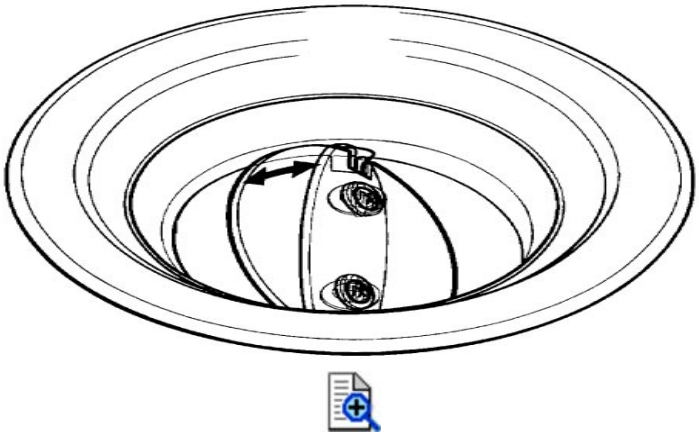</td><td>Replace the ECM with a known good one, and inspect it again. ☞</td><td>Replace the throttle body assembly with a new one. ☞</td></tr>
</table>

	Is check result OK?		

DTC P1656 (C49)

DTC Detecting Condition and Trouble Area

DTC detecting condition	Trouble area
P1656 (C49): PAIR Control Solenoid Valve Circuit Malfunction PAIR control solenoid valve voltage is not input to ECM.	• PAIR control solenoid valve • PAIR control solenoid valve circuit • ECM

Wiring Diagram

Refer to ***FI System Wiring Diagram***.

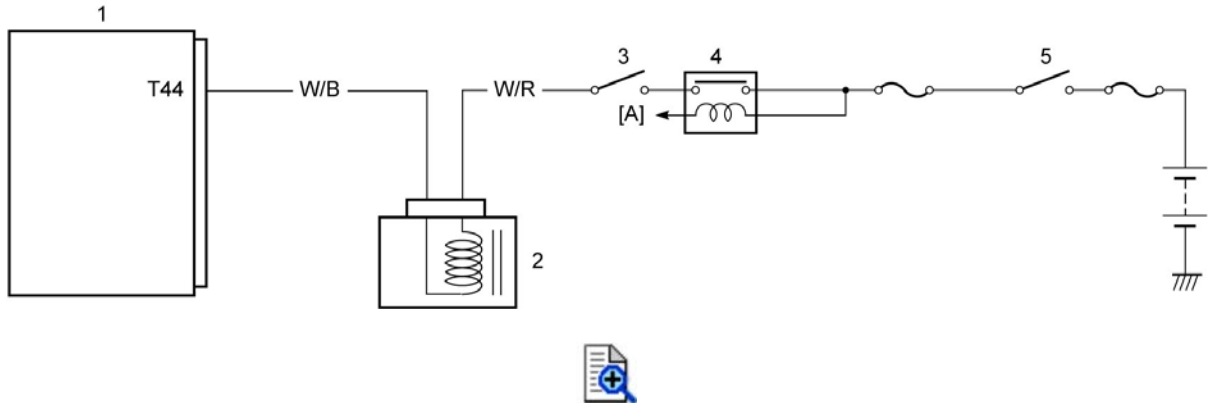

[A]:	To side-stand switch	2.	PAIR control solenoid valve	4.	Side-stand relay
1.	ECM	3.	Engine stop switch	5.	Ignition switch

Troubleshooting

Step	Action	Yes	No
1	**PAIR control solenoid valve power supply voltage check** 1) Turn the ignition switch OFF. 2) Disconnect the PAIR control solenoid valve coupler. ☞ 3) Check for proper terminal connection to the PAIR control solenoid valve coupler. 4) If connections are OK, turn the ignition switch ON. 5) Measure the voltage between the W/R wire and ground. **PAIR control solenoid valve power supply voltage** **[Standard]: Battery voltage**	Go to Step 2.	Repair or replace the W/R wire.

	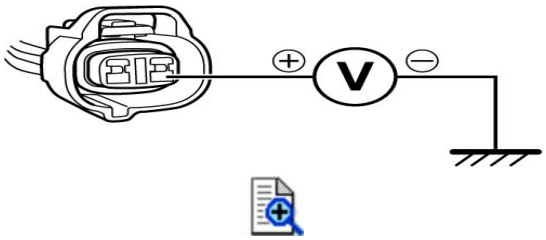 ***Is check result OK?***		
2	**PAIR control solenoid valve driver circuit check** 1) Turn the ignition switch OFF. 2) Disconnect the ECM couplers. ☞ 3) Check for proper terminal connection to the ECM couplers. 4) If connections are OK, check the following points. • Resistance — W/B wire: less than 1 Ω 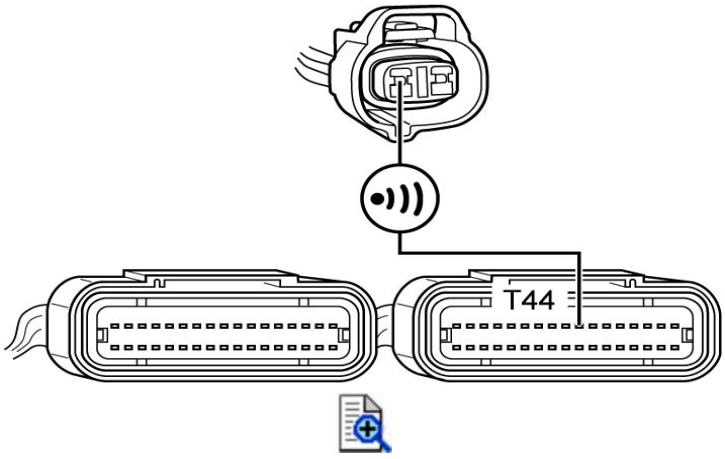 — Between W/B wire and ground: infinity 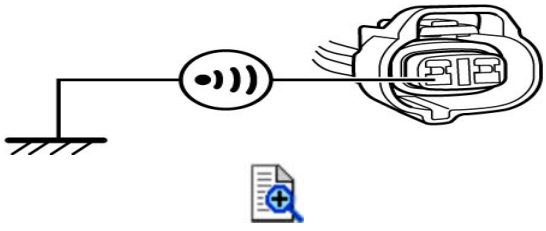 — Between W/B wire terminal and W/R wire terminal at PAIR control solenoid valve coupler: infinity 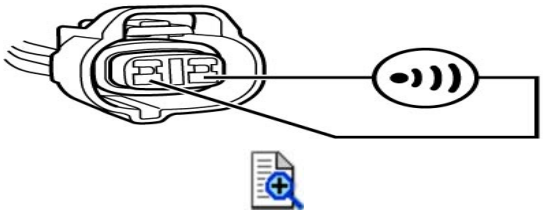 • Voltage	Go to Step 3.	Repair or replace the W/B wire.

	— Turn the ignition switch ON. — W/B wire: approx. 0 V 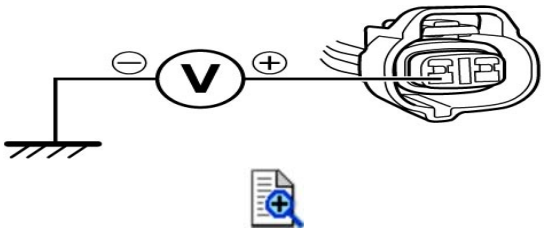 ***Is check result OK?***		
3	**PAIR control solenoid valve resistance check** 1) Turn the ignition switch OFF. 2) Measure the PAIR control solenoid valve resistance. Refer to "PAIR Control Solenoid Valve" under ***PAIR System Inspection***. ***Is check result OK?***	Replace the ECM with a known good one, and inspect it again. ☞	Replace the PAIR control solenoid valve with a new one. ☞

DTC P1657-H / P1657-L (C46)

DTC Detecting Condition and Trouble Area

DTC detecting condition	Trouble area
P1657-H (C46): EXCVA Position Sensor Circuit High Voltage The sensor output voltage is higher than 4.90 V.	• EXCVA • EXCVA maladjustment • EXCVA position sensor circuit • ECM
P01657-L (C46): EXCVA Position Sensor Circuit Low Voltage The sensor output voltage is lower than 0.14 V.	

Wiring Diagram

Refer to ***FI System Wiring Diagram***.

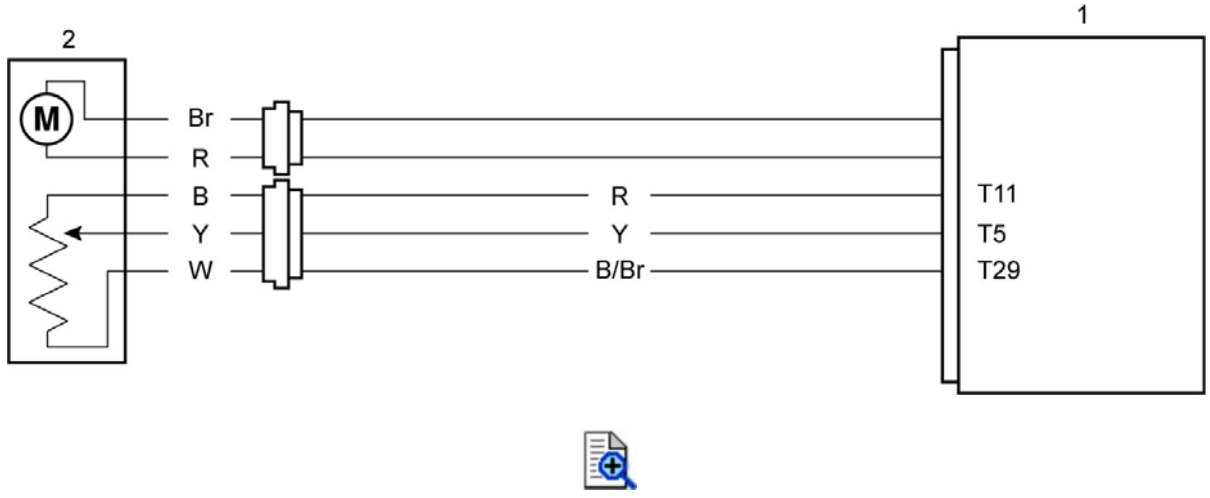

1.	ECM	2.	EXCVA

Troubleshooting

Step	Action	Yes	No
1	**EXCV position sensor power supply circuit check** 1) Turn the ignition switch OFF. 2) Disconnect the EXCVA position sensor coupler. 3) Check for proper terminal connection to the EXCVA position sensor coupler. 4) If connections are OK, turn the ignition switch ON. 5) Measure the voltage between the R wire and B/Br wire. **EXCVA position sensor power supply voltage**	Go to Step 3.	Go to Step 2.

	[Standard]: 4.5 – 5.5 V 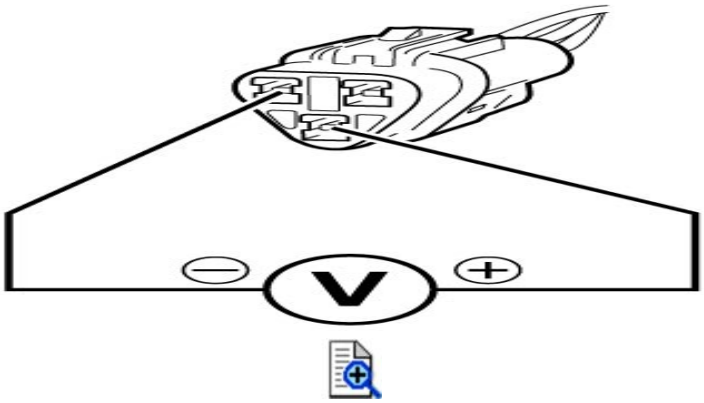 ***Is check result OK?***		
2	**EXCV position sensor ground circuit check** 1) Measure the voltage between the R wire and ground. 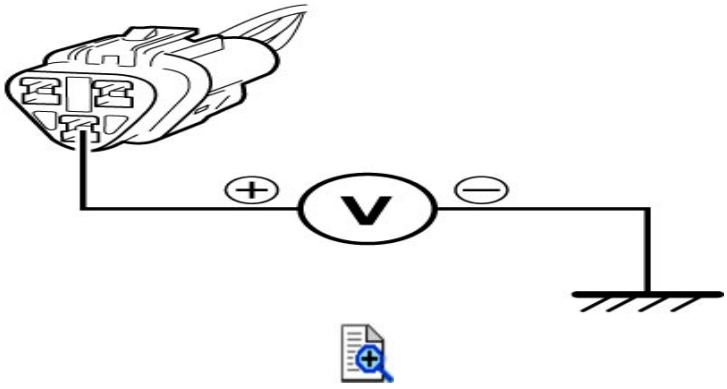 ***Is voltage same as Step 1?***	Repair or replace the B/Br wire.	Repair or replace the R wire.
3	**EXCV position sensor signal circuit check** 1) Turn the ignition switch OFF. 2) Disconnect the ECM couplers. ☞ 3) Check for proper terminal connection to the ECM couplers. 4) If connections are OK, check the following points. • Resistance — Y wire: less than 1 Ω 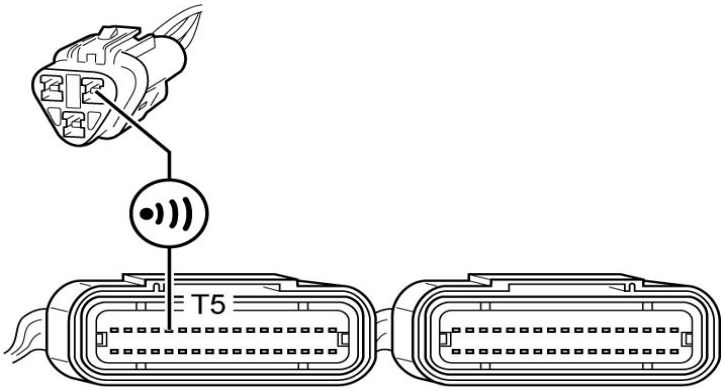	Go to Step 4.	Repair or replace the Y wire.

	— Between Y wire and ground: infinity  — Between Y wire terminal and other terminal at EXCVA position sensor coupler: infinity 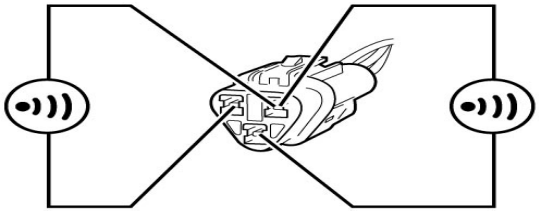 • Voltage — Turn the ignition switch ON. — Y wire: approx. 0 V  ***Is check result OK?***		
4	**EXCV cable check** 1) Turn the ignition switch OFF. 2) Remove the right under cowling. ☞ 3) Check the installation of EXCV cables. Refer to ***EXCVA / EXCV Cable Removal and Installation***.	Go to Step 5.	Replace or adjust the EXCV cables. ☞ ☞

	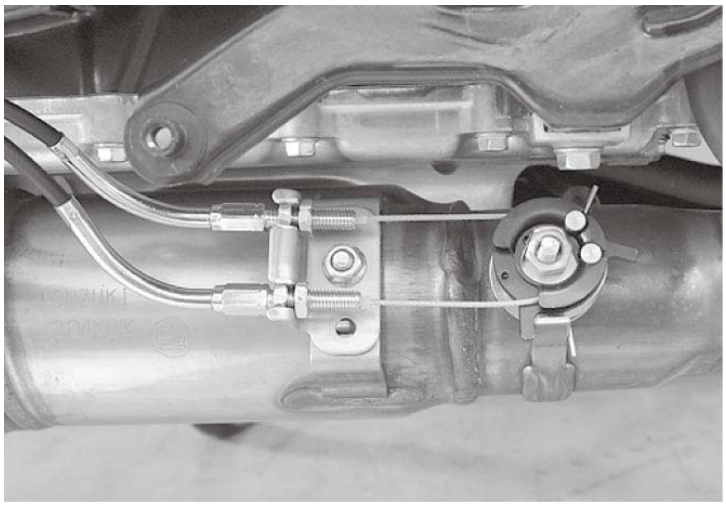 ***Is check result OK?***		
5	**EXCVA position sensor resistance check** 1) Connect the ECM couplers and EXCVA position sensor coupler. 2) Set the EXCVA to adjustment position. Refer to ***EXCVA / EXCV Cable Removal and Installation***. 3) Turn the ignition switch OFF and disconnect the EXCVA position sensor coupler. 4) Measure the EXCVA position sensor resistance. Refer to "EXCVA Position Sensor Resistance" under ***EXCVA Inspection***. ***Is check result OK?***	Go to Step 6.	Replace the EXCVA with a new one. ☞
6	**EXCVA position sensor output voltage check** 1) Connect the EXCVA position sensor coupler. 2) Measure the EXCVA position sensor output voltage. Refer to "EXCVA Position Sensor Output Voltage" under ***EXCVA Inspection***. ***Is check result OK?***	Replace the ECM with a known good one, and inspect it again. ☞	Go to Step 7.
7	**EXCV cable adjusting check** ***NOTICE:*** • **Adjusting the cable with the EXCV fully opened or fully closed can damage the EXCVA. Be sure to adjust the cable with the EXCV set in the adjustment position.** ☞ • **Do not turn the EXCVA pulley using the wrench.** 1) If the EXCVA position sensor output voltage is 0.45 V or less at EXCV fully closed position, adjust the output voltage to the specified value	Replace the ECM with a known good one, and inspect it again. ☞	Replace the EXCVA with a new one. ☞

by turning the No. 1 cable adjuster (1). ☞

2) Repeat the procedure in Step 6 until the output voltage is set within the specified value. (If P1657 (C46) code is indicated after adjusting the voltage, increase the voltage to 0.9 V).
3) If the EXCVA position sensor output voltage is 4.55 V and more at EXCV fully opened position, adjust the output voltage to the specified value by turning the No. 2 cable adjuster (2). Refer to ***EXCVA / EXCV Cable Removal and Installation***. Repeat the procedure in Step 6 until the output voltage is set within the specified value.

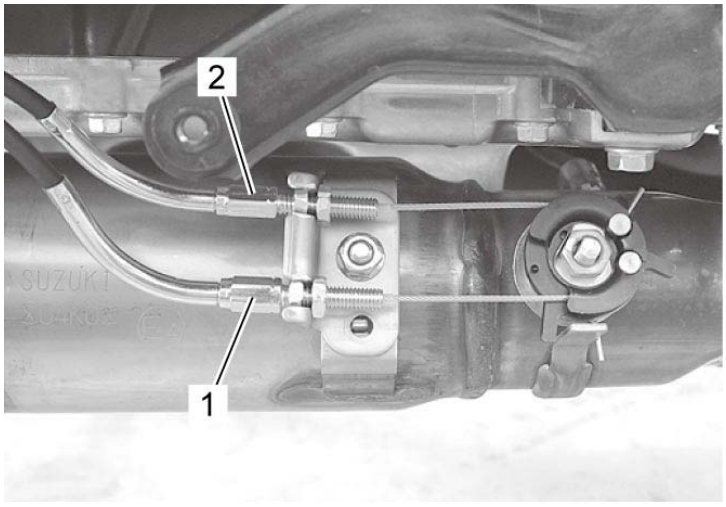

Is the voltage OK?

DTC P1658 (C46)

DTC Detecting Condition and Trouble Area

DTC detecting condition	Trouble area
P1658 (C46): EXCVA Motor Circuit Malfunction EXCVA control signal is not supplied from the ECM. ECM does not receive communication signal from the EXCVA or operation voltage does not reach EXCVA motor.	• EXCVA • EXCVA motor circuit • ECM

Wiring Diagram

Refer to ***FI System Wiring Diagram***.

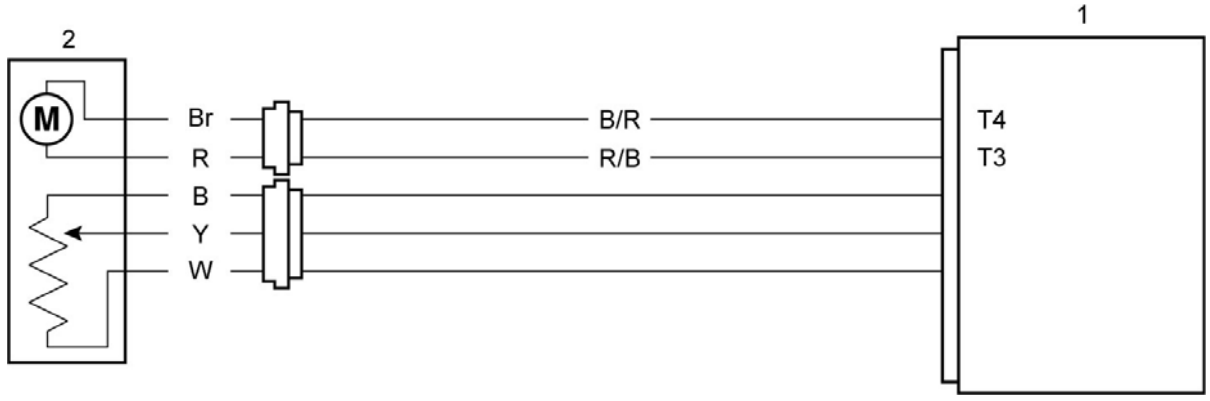

1.	ECM	2.	EXCVA

Troubleshooting

Step	Action	Yes	No
1	**EXCVA motor circuit check** 1) Turn the ignition switch OFF. 2) Disconnect the EXCVA motor coupler and ECM couplers. • EXCVA: ☞ • ECM: ☞ 3) Check for proper terminal connection to the EXCVA motor coupler and ECM couplers. 4) If connections are OK, check the following points. • Resistance — B/R wire and R/B wire: less than 1 Ω	Go to Step 2.	Repair or replace the defective wire harness.

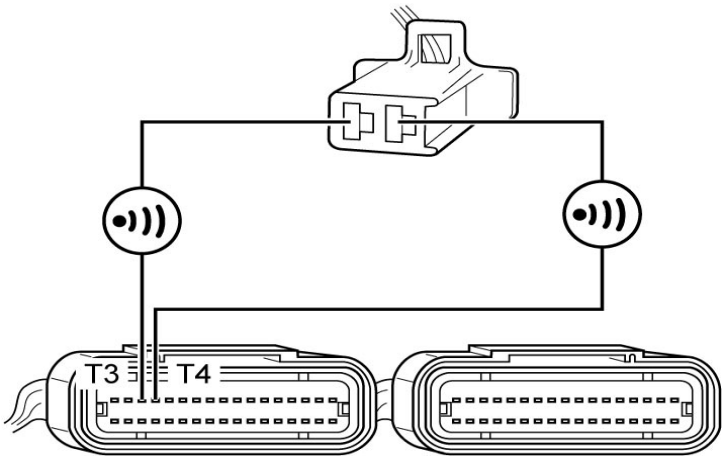

— Between B/R wire and ground: infinity
— Between R/B wire and ground: infinity

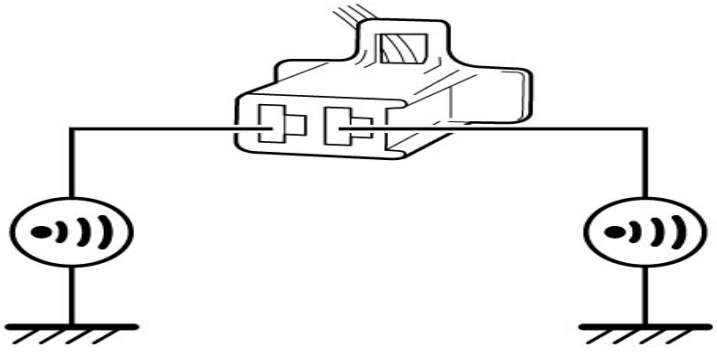

— Between B/R wire terminal and R/B wire terminal at STVA motor coupler: infinity

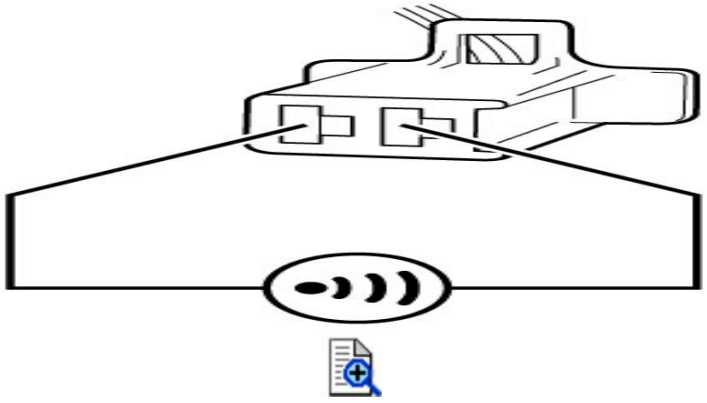

- Voltage
  — Turn the ignition switch ON.
  — B/R wire and R/B wire: approx. 0 V

	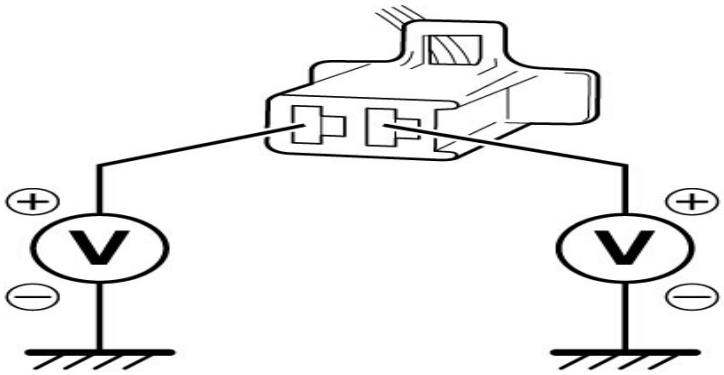 ***Is check result OK?***		
2	**EXCV cable check** 1) Turn the ignition switch OFF. 2) Remove the right under cowling. ☞ 3) Check the installation of EXCV cables. Refer to ***EXCVA / EXCV Cable Removal and Installation***. 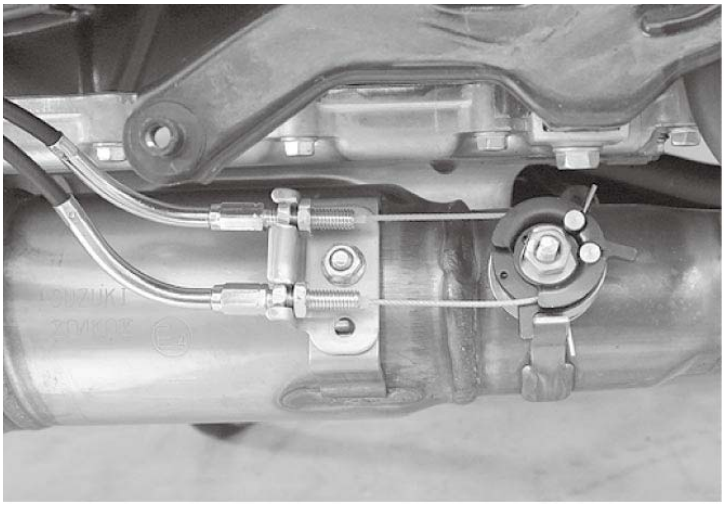 ***Is check result OK?***	Go to Step 3.	Replace or adjust the EXCV cables. ☞ ☞
3	**EXCVA motor check** 1) Check the operation of EXCVA motor. Refer to "EXCVA Motor" under ***EXCVA Inspection***. ***Is check result OK?***	Replace the ECM with a known good one, and inspect it again. ☞	Replace the EXCVA with a new one. ☞

DTC P1750-H / P1750-L (C17)

DTC Detecting Condition and Trouble Area

DTC detecting condition	Trouble area
P1750-H (C17): AP Sensor Circuit High Voltage The sensor output voltage is higher than 4.85 V.	• Vacuum passage between throttle body and AP sensor • AP sensor • AP sensor circuit • ECM
P1750-L (C17): AP Sensor Circuit Low Voltage The sensor output voltage is lower than 0.5 V.	

Wiring Diagram

Refer to ***FI System Wiring Diagram***.

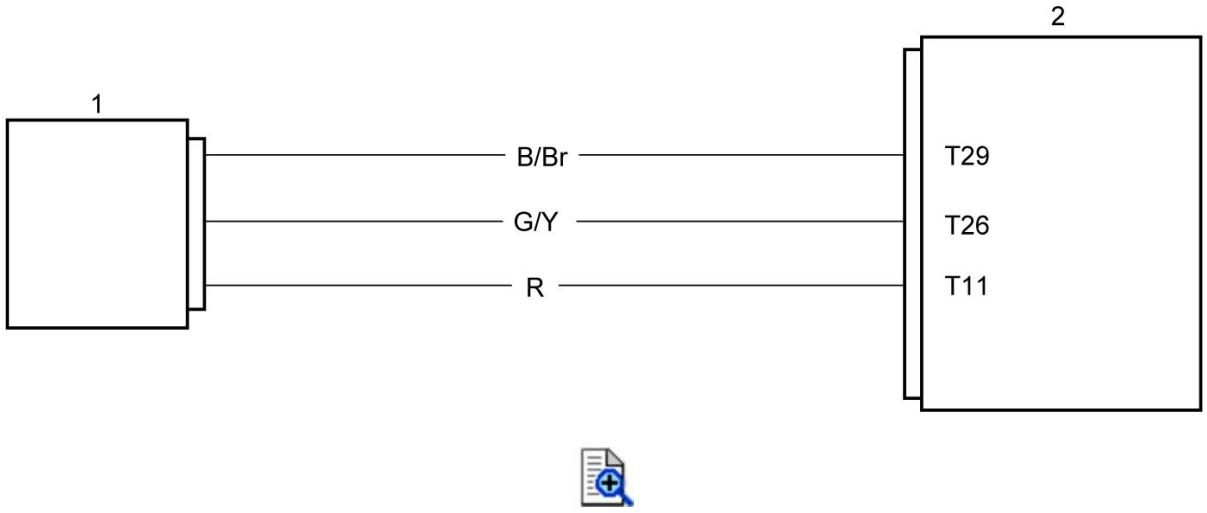

1.	AP sensor	2.	ECM

Troubleshooting

Step	Action	Yes	No
1	**AP sensor power supply circuit check** 1) Turn the ignition switch OFF. 2) Disconnect the AP sensor coupler. ☞ 3) Check for proper terminal connection to the AP sensor coupler. 4) If connections are OK, turn the ignition switch ON. 5) Measure the voltage between the R wire and B/Br wire. **AP sensor power supply voltage** **[Standard]: 4.75 – 5.25 V**	Go to Step 3.	Go to Step 2.

	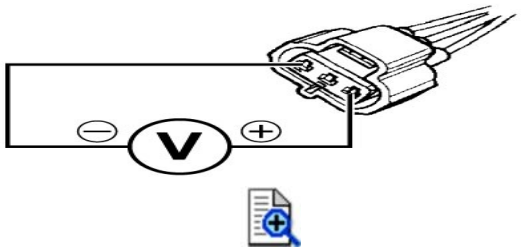 ***Is check result OK?***		
2	**AP sensor ground circuit check** 1) Measure the voltage between the R wire and ground. 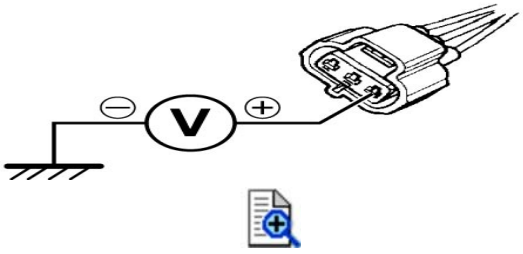 ***Is voltage same as Step 1?***	Repair or replace the B/Br wire.	Repair or replace the R wire.
3	**AP sensor signal circuit check** 1) Turn the ignition switch OFF. 2) Disconnect the ECM couplers. ☞ 3) Check for proper terminal connection to the ECM couplers. 4) If connections are OK, check the following points. • Resistance — G/Y wire: less than 1 Ω 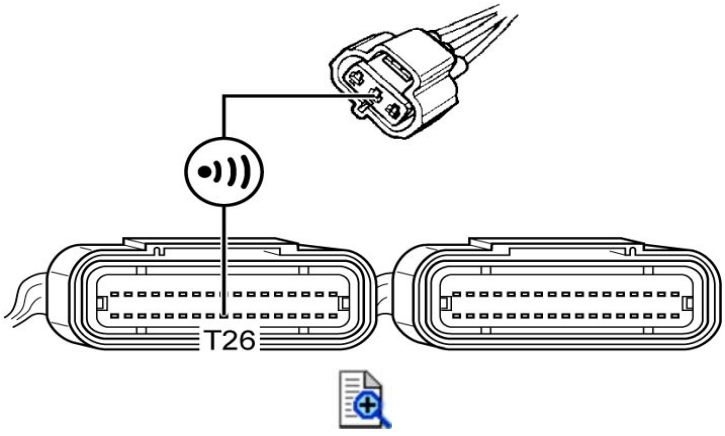 — Between G/Y wire and ground: infinity	Go to Step 4.	Repair or replace the G/Y wire.

	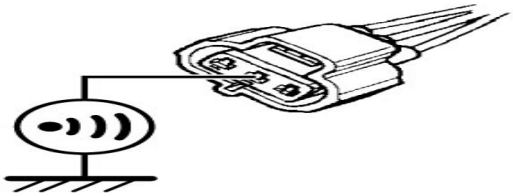 — G/Y wire terminal and other terminal at AP sensor coupler: infinity 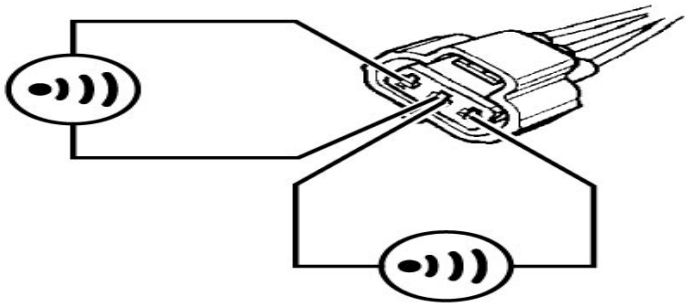 • Voltage — Turn the ignition switch ON. — G/Y wire: approx. 0 V 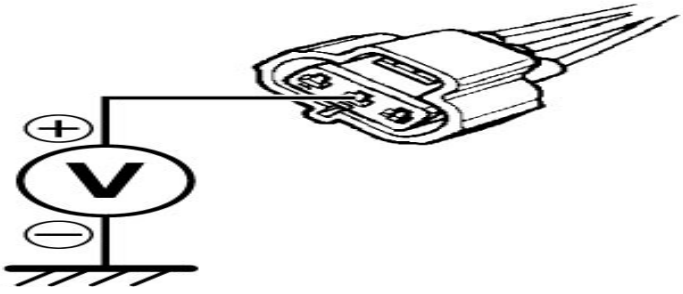 ***Is check result OK?***		
4	**AP sensor output voltage at idle speed check** 1) Turn the ignition switch OFF. 2) Connect the ECM couplers and AP sensor coupler. 3) Measure the AP sensor output voltage at idle speed. Refer to "AP Sensor Output Voltage at Idle Speed" under ***AP Sensor Inspection***. ***Is check result OK?***	Go to Step 5.	Check the vacuum hose for crack or damage. If vacuum hose is OK, replace the AP sensor with a new one. ☞
5	**AP sensor output voltage check** 1) Turn the ignition switch OFF. 2) Remove the AP sensor. ☞	Replace the ECM with a known good one, and	Replace the AP sensor with a new one. ☞

	3) Measure the AP sensor output voltage. Refer to "AP Sensor Output Voltage" under ***AP Sensor Inspection***. ***Is check result OK?***	inspect it again. ☞	

DTC P2505 (C41)

DTC Detecting Condition and Trouble Area

DTC detecting condition	Trouble area
P2505 (C41): ECM Power Input Signal Circuit Malfunction No voltage is applied to the ECM, although the ignition switch is turned ON.	• Fuel fuse • ECM power supply circuit • ECM

Wiring Diagram

Refer to ***FI System Wiring Diagram***.

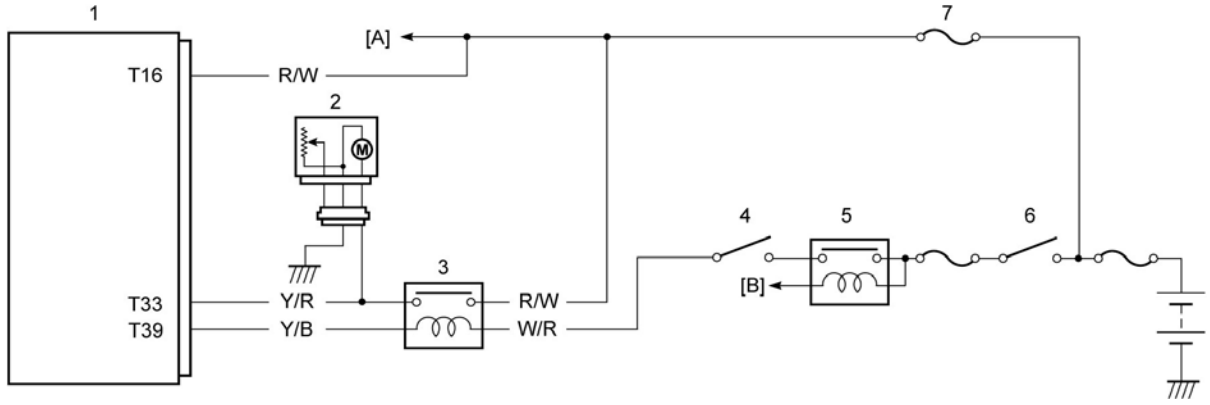

[A]:	To combination meter	1.	ECM	3.	FP relay	5.	Side-stand relay	7.	Fuel fuse
[B]:	To side-stand switch	2.	Fuel pump	4.	Engine stop switch	6.	Ignition switch		

Troubleshooting

Step	Action	Yes	No
1	**ECM power supply voltage check** 1) Turn the ignition switch OFF. 2) Disconnect the ECM couplers. ☞ 3) Check for proper terminal connection to the ECM couplers. 4) If connections are OK, Measure the voltage between the R/W wire and ground. **ECM power supply voltage** **[Standard]: Battery voltage**	Replace the ECM with a known good one, and inspect it again. ☞	Check FUEL fuse for blowout. If fuse is not blown, repair or replace the R/W wire.

	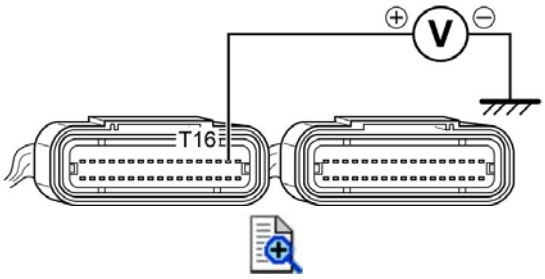 ***Is check result OK?***		

DTC Table

DTC	DTC name	DTC detecting condition
C00	None	—
P0105-H / P0105-L C13	IAP sensor circuit high voltage / low voltage ☞	The sensor output voltage is higher than 4.85 V. / The sensor output voltage is lower than 0.5 V.
P0110-H / P0110-L C21	IAT sensor circuit high voltage / low voltage ☞	The sensor output voltage is higher than 4.85 V. / The sensor output voltage is lower than 0.15 V.
P0115-H / P0115-L C15	ECT sensor circuit high voltage / low voltage ☞	The sensor output voltage is higher than 4.85 V. / The sensor output voltage is lower than 0.15 V.
P0120-H / P0120-L C14 *1	TP sensor circuit high voltage / low voltage ☞	The sensor output voltage is higher than 4.8 V. / The sensor output voltage is lower than 0.2 V.
P0130 C44	HO2 sensor circuit malfunction ☞	HO2 sensor output voltage is not input to ECM during engine operation and running condition.
P0135 C44	HO2 sensor heater circuit malfunction ☞	The heater can not operate so that heater operation voltage is not supplied to the HO2 sensor heater circuit.
P0201 C32	Fuel injector #1 circuit malfunction ☞	Fuel injector #1 signal is interrupted by 4 times or more continuity although CKP signal is detected.
P0202 C33	Fuel injector #2 circuit malfunction ☞	Fuel injector #2 signal is interrupted by 4 times or more continuity although CKP signal is detected.
P0203 C34	Fuel injector #3 circuit malfunction ☞	Fuel injector #3 signal is interrupted by 4 times or more continuity although CKP signal is detected.
P0204 C35	Fuel injector #4 circuit malfunction ☞	Fuel injector #4 signal is interrupted by 4 times or more continuity although CKP signal is detected.
P0230-H / P0230-L C41	Unexpected power supply to fuel pump / Unexpected power cut to fuel pump ☞	Voltage is applied to fuel pump although FP relay is turned OFF. / No voltage is applied to fuel pump although FP relay is turned ON.
P0335 C12	CKP sensor circuit malfunction ☞	The signal does not reach ECM for 2 sec. or more, after receiving the starter signal.
P0351 C24	Ignition system #1 malfunction ☞	Ignition coil #1 signal is interrupted by 8 times or more continuity although CKP signal is detected. P0351 (C24): Ignition coil #1
P0352 C25	Ignition system #2 malfunction ☞	Ignition coil #2 signal is interrupted by 8 times or more continuity although CKP signal is detected. P0352 (C25): Ignition coil #2
P0353 C26	Ignition system #3 malfunction ☞	Ignition coil #3 signal is interrupted by 8 times or more continuity although CKP signal is detected. P0353 (C26): Ignition coil #3

P0354 C27	Ignition system #4 malfunction ☞	Ignition coil #4 signal is interrupted by 8 times or more continuity although CKP signal is detected. P0354 (C27): Ignition coil #4
P0443 *2 C62 *2	EVAP system purge control solenoid valve circuit malfunction ☞	EVAP system purge control solenoid valve voltage is not input to ECM.
P0480 C60	Cooling fan relay circuit malfunction ☞	Cooling fan relay signal is not input to ECM.
P0500 C16	Vehicle speed sensor (Front) circuit malfunction • Without ABS ☞ • With ABS ☞	The speed sensor signal is not input for more than 3 sec.
P0505 C40	ISC valve circuit malfunction ☞	The circuit voltage of motor drive is unusual.
P0506 C65	ISC valve, lower than desired rpm ☞	Idle speed dropped lower than desired idle speed by more than specified range.
P0507 C65	ISC valve, higher than desired rpm ☞	Idle speed rose higher than desired idle speed by more than specified range.
P0705 C31	GP switch circuit malfunction ☞	Gear position signal voltage is lower than the specified value.
P1500 C91	Vehicle speed sensor (Rear) circuit malfunction • Without ABS ☞ • With ABS ☞	The speed sensor signal is not input for more than 3 sec.
P1650 C42	IG switch circuit malfunction ☞	Ignition switch signal is not input to the ECM. When the ID agreement is not verified. (With immobilizer system) ECM does not receive communication signal from the immobilizer antenna. (With immobilizer system)
P1651-H / P1651-L C23	TO sensor circuit high voltage / low voltage ☞	The sensor output voltage is higher than 4.80 V. / The sensor output voltage is lower than 0.20 V.
P1654-H / P1654-L C29	STP sensor circuit high voltage / low voltage ☞	The sensor output voltage is higher than 4.85 V. / The sensor output voltage is lower than 0.15 V.
P1655 C28	STVA circuit malfunction ☞	STVA control signal is not supplied from the ECM. ECM does not receive communication signal from the STVA or operation voltage does not reach STVA.
P1656 C49	PAIR control solenoid valve circuit malfunction ☞	PAIR control solenoid valve voltage is not input to ECM.
P1657-H / P1657-L C46	EXCVA position sensor circuit high voltage / low voltage ☞	The sensor output voltage is higher than 4.90 V. / The sensor output voltage is lower than 0.14 V.
P1658 C46	EXCVA motor circuit malfunction ☞	EXCVA control signal is not supplied from the ECM. ECM does not receive communication signal from the EXCVA or operation voltage does not reach EXCVA motor.
P1750-H / P1750-L C17	AP sensor circuit high voltage / low voltage ☞	The sensor output voltage is higher than 4.85 V. / The sensor output voltage is lower than 0.5 V.

P2505 C41	ECM power input signal circuit malfunction ☞	No voltage is applied to the ECM, although the ignition switch is turned ON.

In the LCD (DISPLAY) panel, the DTC is indicated from small code to large code.

***1**

To get the proper signal from the TP sensor, the sensor basic position is indicated in the LCD (DISPLAY) panel. The DTC is indicated in three digits. In front of the three digits, a line appears in any of the three positions, upper, middle or lower line. If the indication is upper or lower line, adjust the TP sensor. ☞

***2**

If equipped.

Special Tool

09930–82720	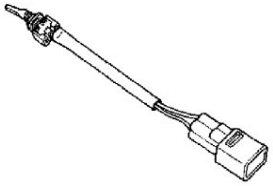		
Mode selection switch			
☞ ☞			

Crankcase Emission Control System Description

The engine is equipped with a PCV system. Blow-by gas in the engine is constantly drawn into the crankcase, which is returned to the combustion chamber through the PCV (breather) hose (1), air cleaner (2) and throttle body (3).

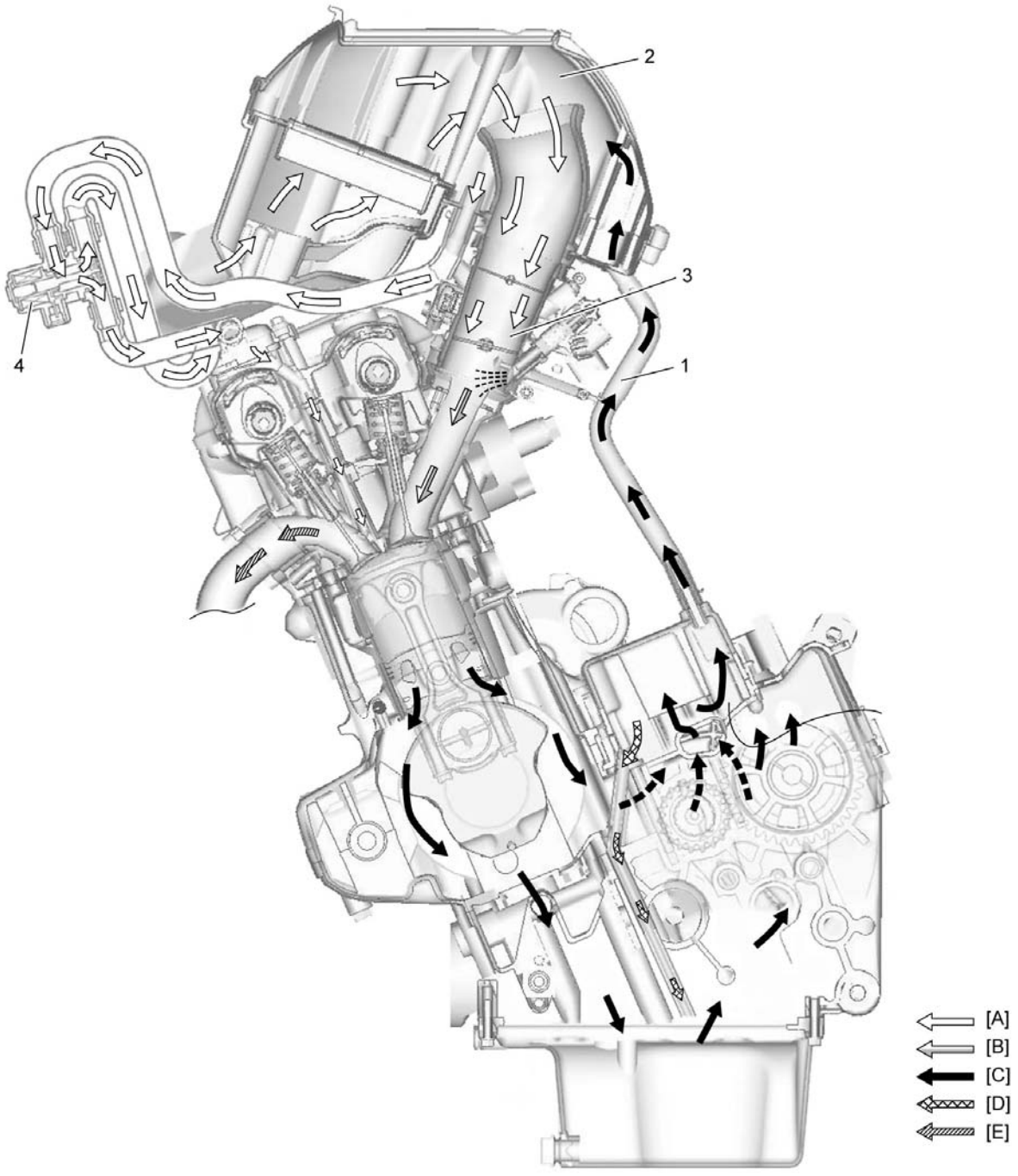

[A]:	Fresh air	[C]:	Blow-by gas	[E]:	Exhaust gas
[B]:	Fuel/Air mixture	[D]:	Return oil	4.	PAIR control solenoid valve

Crankcase Breather (PCV) Cover Inspection

Inspect the crankcase breather (PCV) cover in the following procedures:

1) Remove the crankcase breather (PCV) cover. Refer to ***Crankcase Breather (PCV) Hose / Cover Removal and Installation***.

2) Inspect the crankcase breather (PCV) cover for carbon deposit. If carbon deposit is found in the crankcase breather (PCV) cover, remove the carbon.

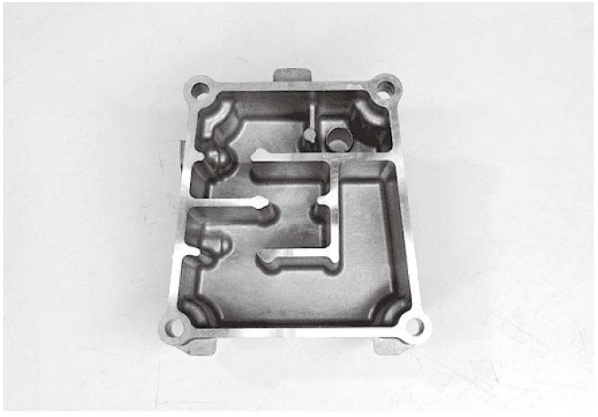

3) Install the crankcase breather (PCV) cover. Refer to ***Crankcase Breather (PCV) Hose / Cover Removal and Installation***.

Crankcase Breather (PCV) Hose / Cover Removal and Installation

Removal

1) Lift and support the fuel tank. ☞

2) Remove the EVAP canister (If equipped). Refer to ***EVAP Control System Removal and Installation (If Equipped)***.

3) Disconnect the crankcase breather (PCV) hose (1).

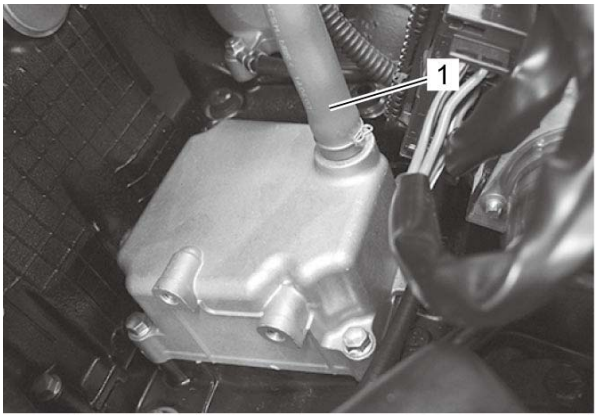

4) Remove the crankcase breather (PCV) cover (1).

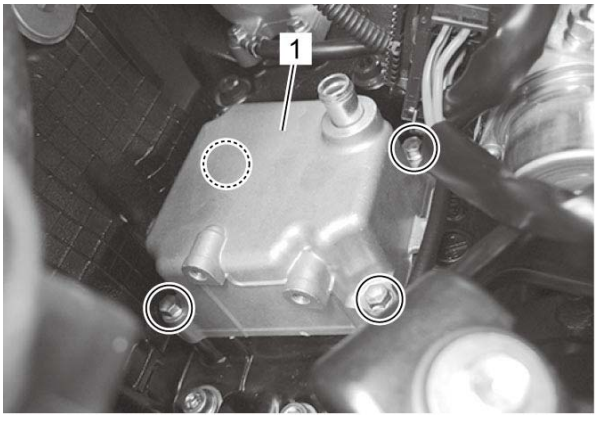

5) Remove the gasket (1).

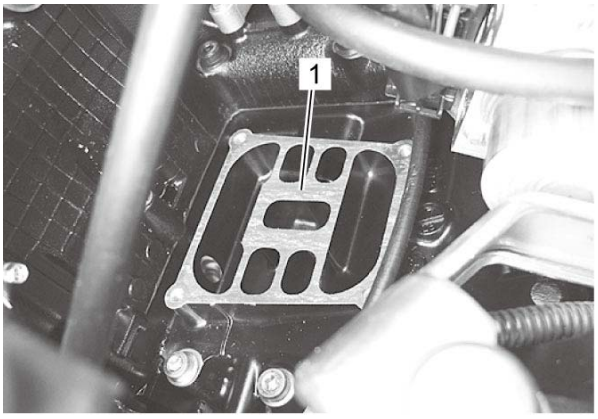

Installation

Reference: Crankcase Breather (PCV) Cover Inspection

Installation is in the reverse order of removal.

Pay attention to the following points:

- Fit the new gasket (1).

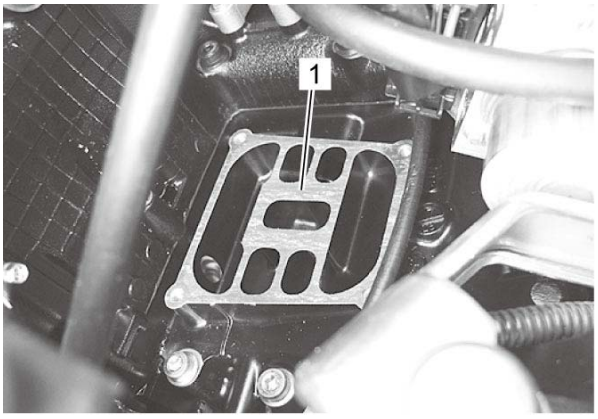

- Tighten the breather cover bolts (1) to the specified torque.

Tightening torque

Breather cover bolt (a): 10 N·m (1.0 kgf-m, 7.5 lbf-ft)

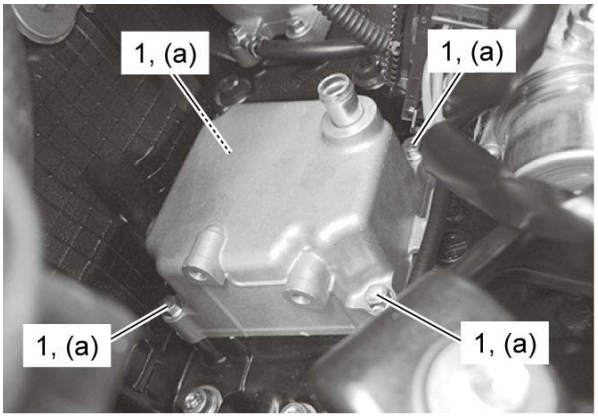

- Connect the crankcase breather (PCV) hose securely. Refer to ***Intake System Construction***.

Crankcase Breather (PCV) Hose Inspection

1) Lift and support the fuel tank. ☞

2) Inspect the crankcase breather (PCV) hose (1) for wear and damage.
If it is worn or damaged, replace the crankcase breather (PCV) hose with a new one.

3) Check that the crankcase breather (PCV) hose (1) is securely connected.

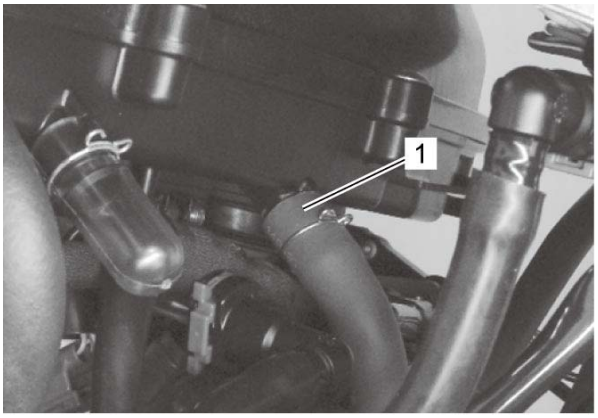

4) Install the removed parts.

EVAP Canister Hose Routing Diagram (If Equipped)

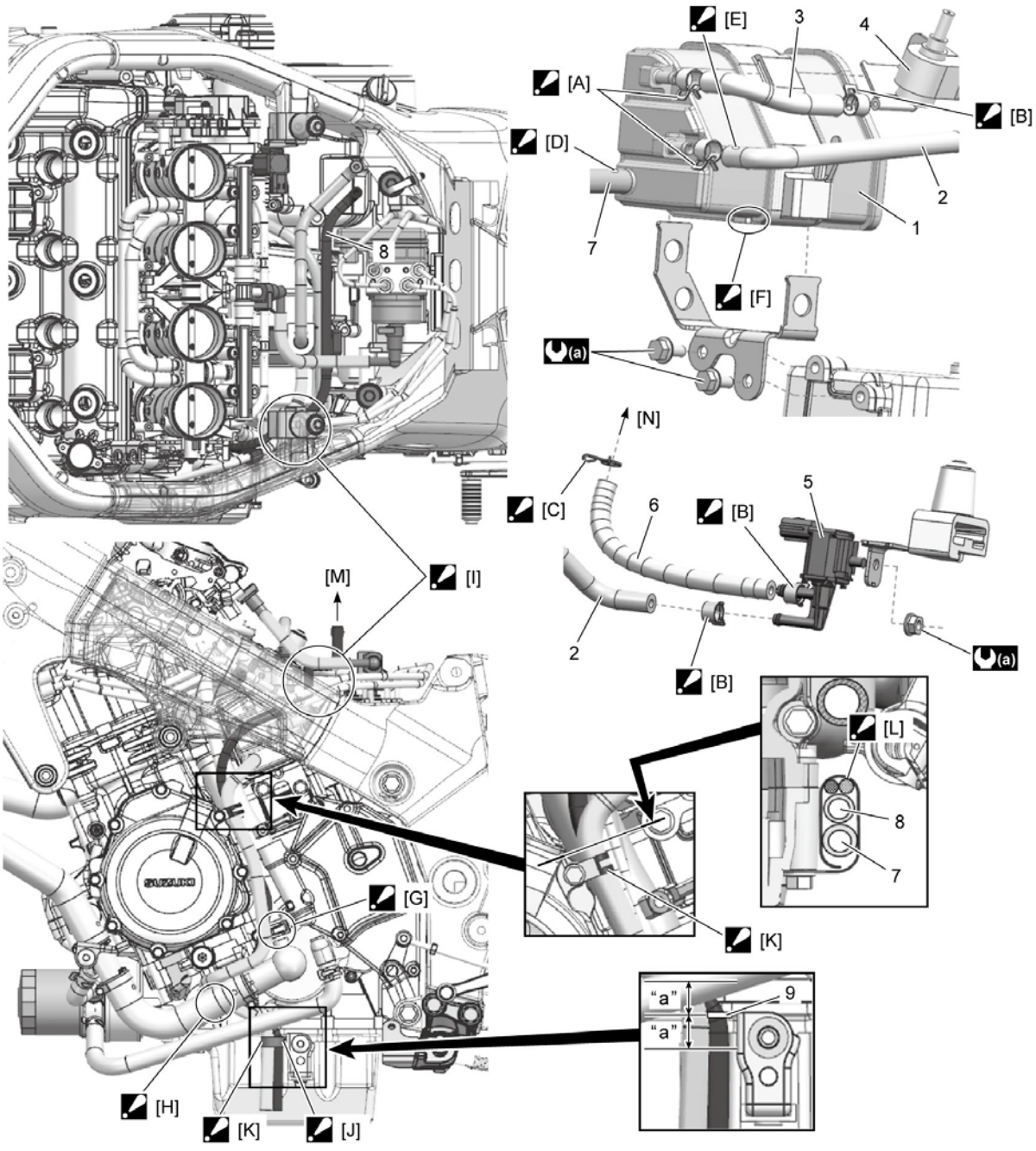

[A]:	Face the clamp end downward.	[N]:	To throttle body
[B]:	Face the clamp end forward.	1.	EVAP canister
[C]:	Face the clamp end backward.	2.	Purge hose No. 1

[D]:	Face the yellow mark upward.	3.	Surge hose
[E]:	Face the white mark upward.	4.	Fuel shut-off valve
[F]:	Fit the boss of cushion and slit of canister.	5.	EVAP purge control solenoid valve
[G]:	Do not contact the hose clamp and canister drain hose.	6.	Purge hose No. 2
[H]:	Pass the canister drain hose between the water pump hose.	7.	Canister drain hose
[I]:	Pass the water drain hose inside of brake pipe. (If equipped)	8.	Water drain hose
[J]:	Clamp the hose at white mark.	9.	White mark
[K]:	Clamp the marking of the hose.	“a”:	10 mm (0.39 in) or less
[L]:	Clamp the HO2 sensor lead wire, side-stand switch lead wire and hoses with the clamp.	(a):	10 N·m (1.0 kgf-m, 7.5 lbf-ft)
[M]:	To fuel tank		

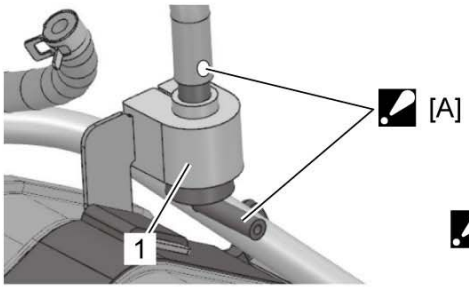

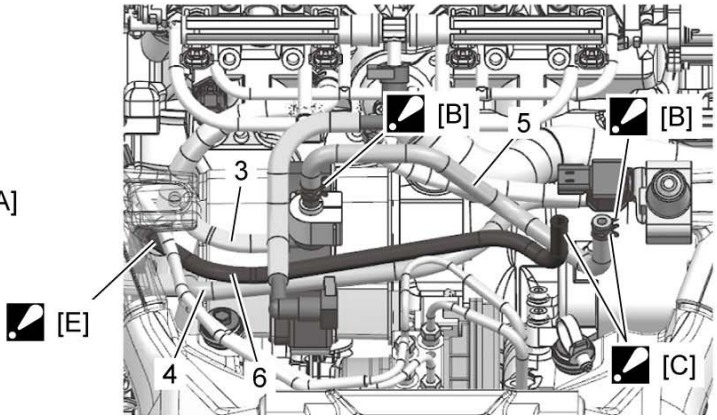

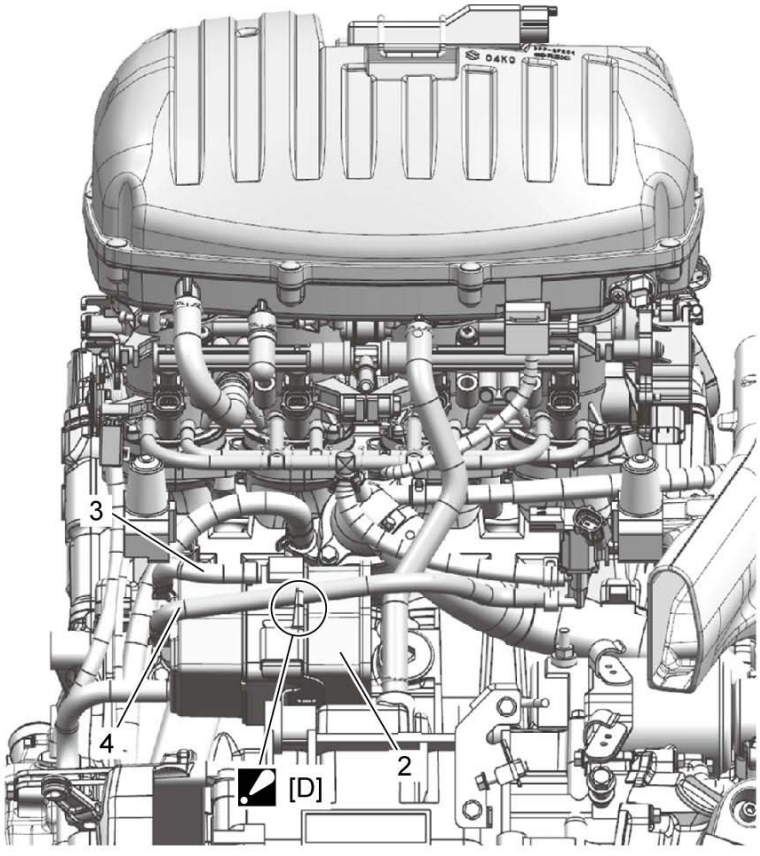

[A]:	Match the direction of yellow marking of the hose and fuel shut-off valve.	2.	EVAP canister
[B]:	Face the clamp end to right side.	3.	Surge hose
[C]:	Face the white mark to right side.	4.	Purge hose No. 1
[D]:	Set the purge hose No. 1 on the boss of cushion.	5.	Fuel tank breather hose

[E]:	Pass the water drain hose between the surge hose and purge hose No. 1.	6.	Water drain hose
1.	Fuel shut-off valve		

EVAP Control System Inspection (If Equipped)

Refer to ***EVAP Control System Removal and Installation (If Equipped)***.

Hose

Inspect the hoses for wear or damage. If it is worn or damage, replace the hose with a new one.

EVAP Canister

Inspect the EVAP canister body for damage to the body. If any defect is found, replace the EVAP canister (1) with a new one.

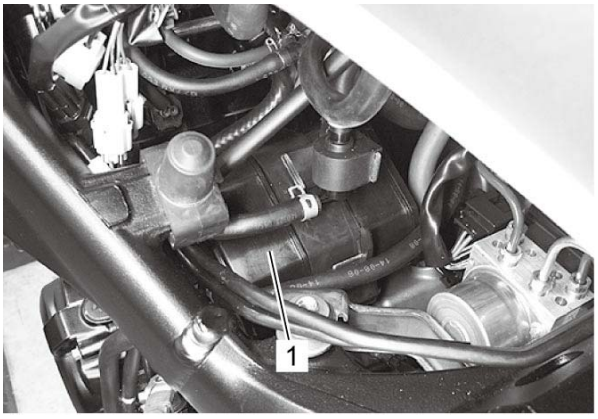

EVAP System Purge Control Solenoid Valve

1) Check that no air flows through both of the air inlet and outlet ports. If air flows out, replace the EVAP system purge control solenoid valve with a new one.

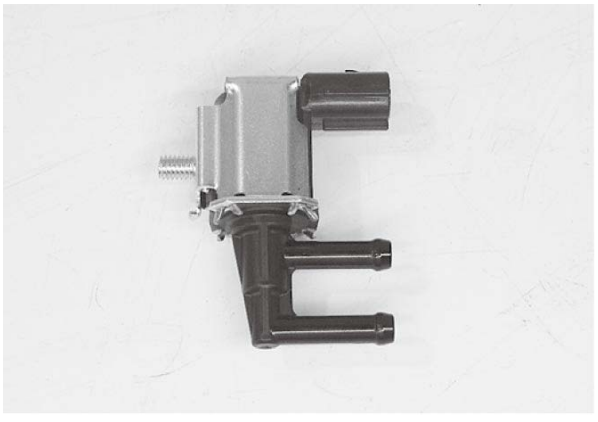

2) Connect the 12 V battery to the terminals of the EVAP system purge control solenoid valve (1) and check the air flow. If air flows out, the solenoid valve is in normal condition.

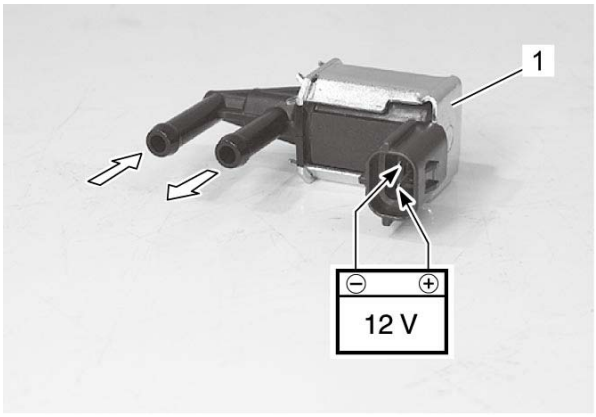

3) Check the resistance between the terminals of the EVAP system purge control solenoid valve (1). If the resistance is not within the standard range, replace the EVAP system purge control solenoid valve with a new one.

EVAP system purge control solenoid valve resistance (If equipped)

20 °C (68 °F) [Standard] 30 – 34 Ω

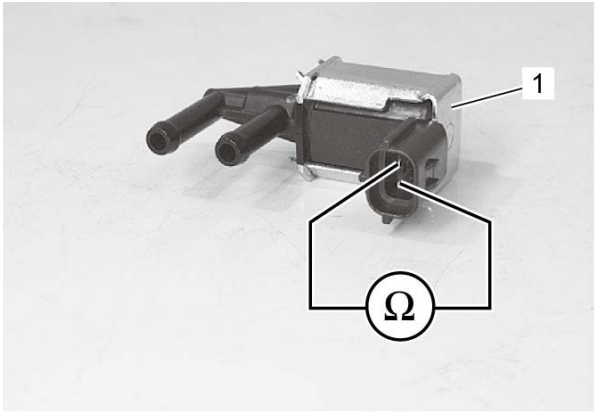

Fuel Shut-off Valve

⚠WARNING:
Gasoline and gasoline vapor is toxic. A small amount of fuel remains in the fuel shut-off valve when checking it.
Do not swallow the fuel when blowing the fuel shut-off valve.

1) When air is blown into the fuel shut-off valve with its side (1) positioned upward, the air can pass through to the canister side.

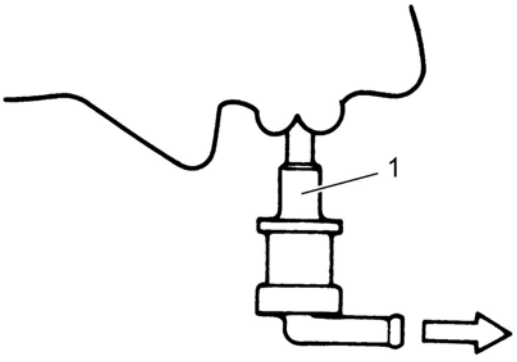

2) When air is blown into the fuel shut-off valve with its side (1) positioned sideways, the air cannot pass through to the canister side.
If the fuel shut-off valve operates otherwise, it must be replaced.

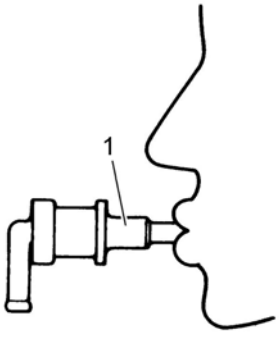

EVAP Control System Removal and Installation (If Equipped)

Hose

Refer to ***EVAP Canister Hose Routing Diagram (If Equipped)***.

Removal

1) Lift and support the fuel tank. ☞

2) Remove the EVAP hoses.

Installation

1) Install the EVAP hoses.

2) Install the removed parts.

EVAP Canister / Fuel Shut-off Valve

Refer to ***EVAP Canister Hose Routing Diagram (If Equipped)***.

Removal

1) Lift and support the fuel tank. ☞

2) Disconnect the fuel tank breather hose (1) and surge hose (2).

3) Remove the fuel shut-off valve (3).

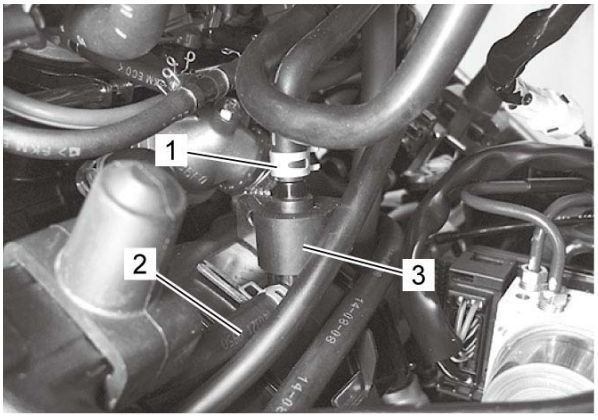

4) Disconnect the canister drain hose (1).

5) Remove the canister bracket bolts (2).

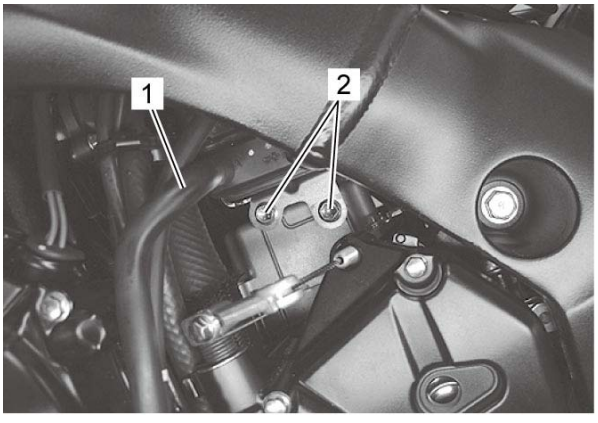

6) Lift the EVAP canister (1) and disconnect the surge hose (2) and purge hose No. 1 (3).
7) Remove the EVAP canister (1).

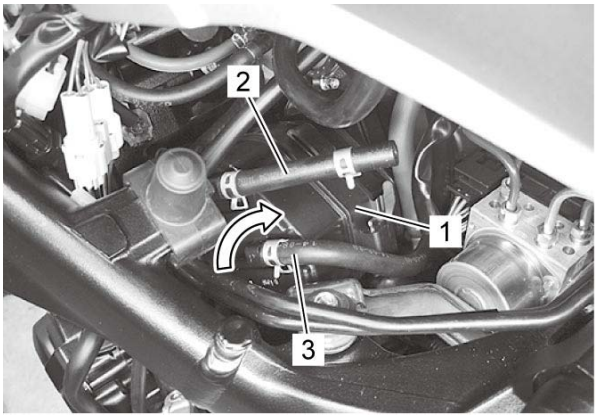

Installation

Install the EVAP canister and fuel shut-off valve in the reverse order of removal. Pay attention to the following point:

- Tighten the canister bracket bolt (1) to the specified torque.

Tightening torque

Canister bracket bolt (a): 10 N·m (1.0 kgf-m, 7.5 lbf-ft)

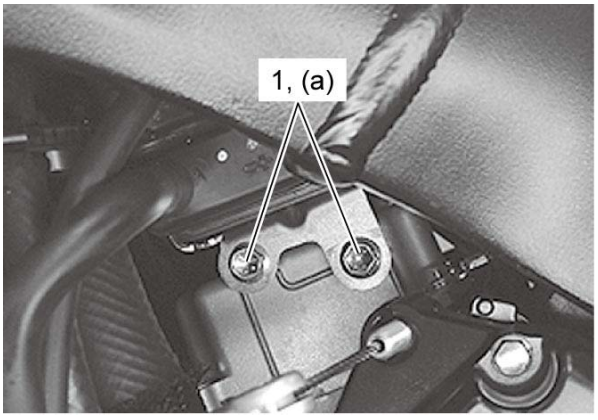

EVAP System Purge Control Solenoid Valve

Removal

1) Lift and support the fuel tank. ☞
2) Disconnect the coupler (1).
3) Remove the EVAP system purge control solenoid valve (2).
4) Disconnect the purge hose No. 1 (3) and purge hose No. 2 (4).

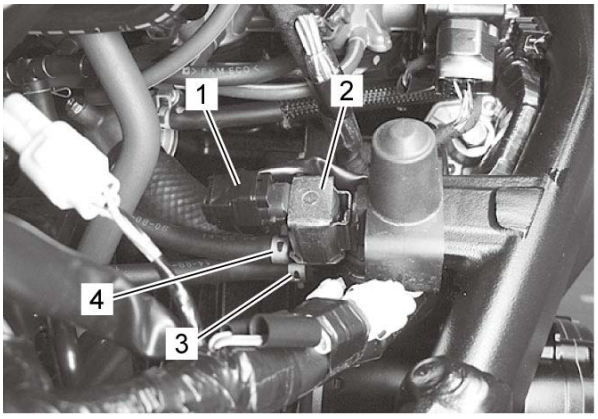

5) Remove the bracket (1).

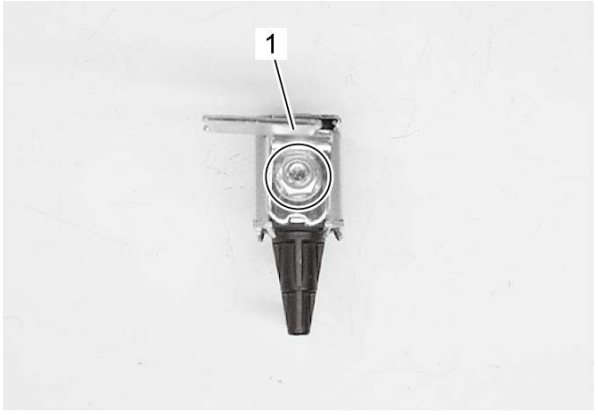

Installation

1) Tighten the EVAP system purge control solenoid valve nut (1) to the specified torque.

Tightening torque

EVAP system purge control solenoid valve nut (a): 10 N·m (1.0 kgf-m, 7.5 lbf-ft)

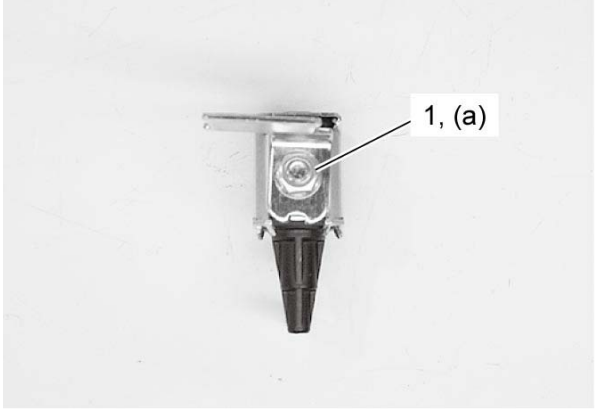

2) Connect the purge hose No. 1 (1) and purge hose No. 2 (2).

3) Install the EVAP system purge control solenoid valve (3) and connect the coupler (4).

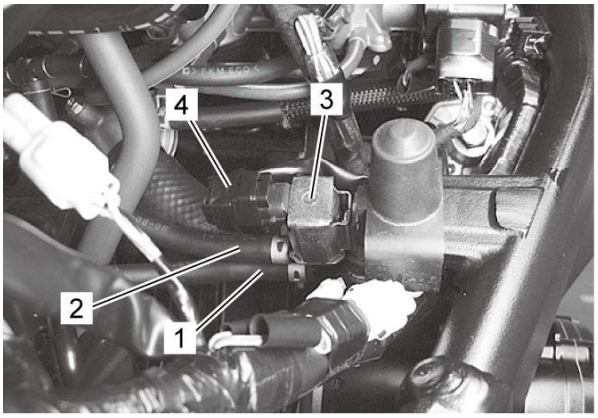

Evaporative Emission Control System Diagram (If Equipped)

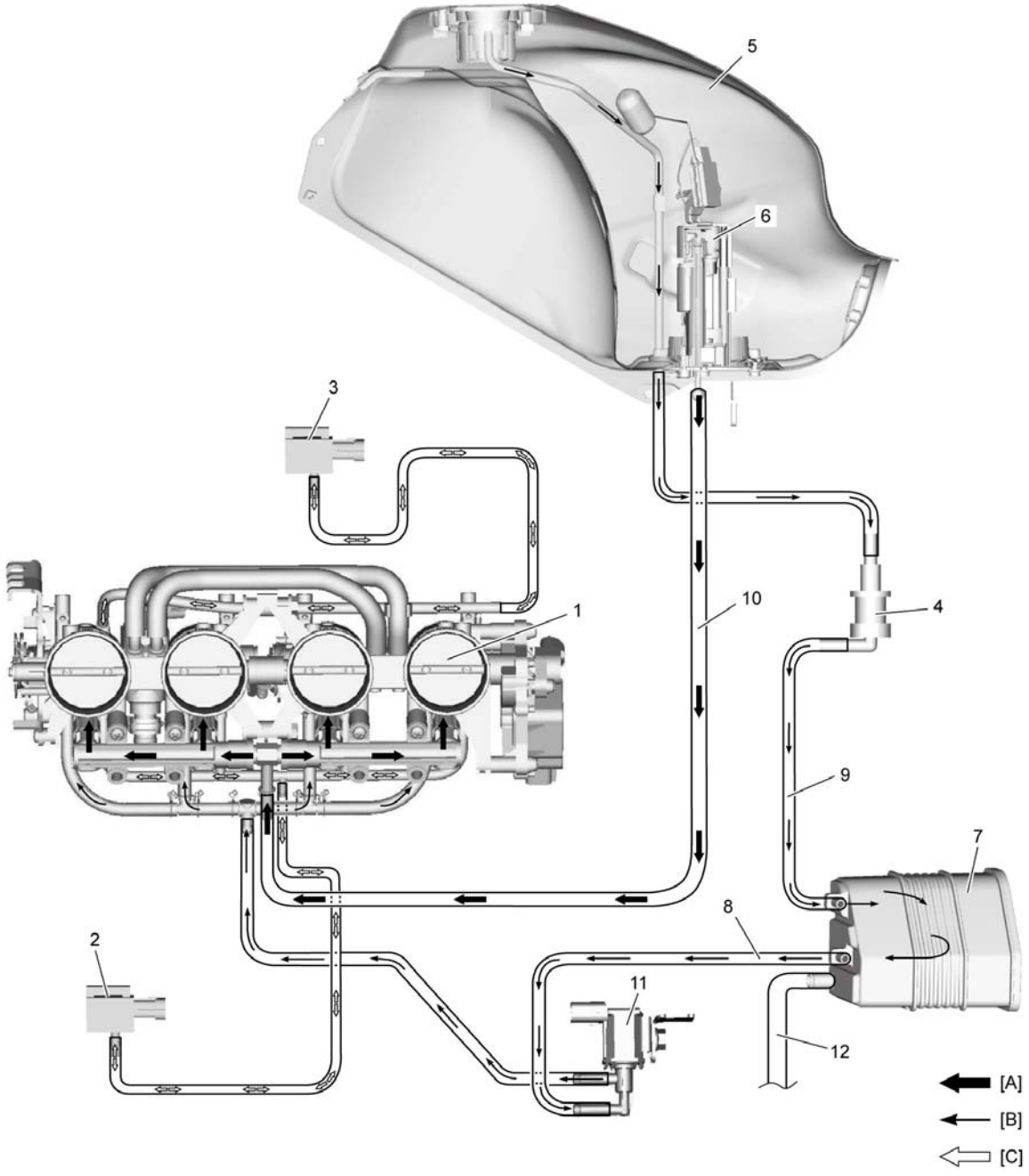

[A]:	Fuel	3.	AP sensor	8.	Purge hose
[B]:	HC vapor	4.	Fuel shut-off valve	9.	Surge hose
[C]:	Vacuum	5.	Fuel tank	10.	Fuel feed hose
1.	Throttle body	6.	Fuel pump	11.	EVAP system purge control solenoid valve

2.	IAP sensor	7.	EVAP canister	12.	Canister drain hose

Exhaust Emission Control System Description

The exhaust emission control system is composed of the PAIR system, exhaust control system, HO2 sensor, three-way catalyst system and ISC system. The fresh air is drawn into the exhaust ports through the PAIR control solenoid valve and PAIR reed valves. The PAIR control solenoid valve is operated by the ECM, which is controlled according to the signals from TPS, ECTS, IAPS and CKPS. The exhaust gas flow is performed by the exhaust control valve actuator which is controlled by the ECM by changing the exhaust control valve angle. ISC valve adjusts the bypass air volume of the throttle body to control engine idling speed with various sensor signals by varying engine running conditions.

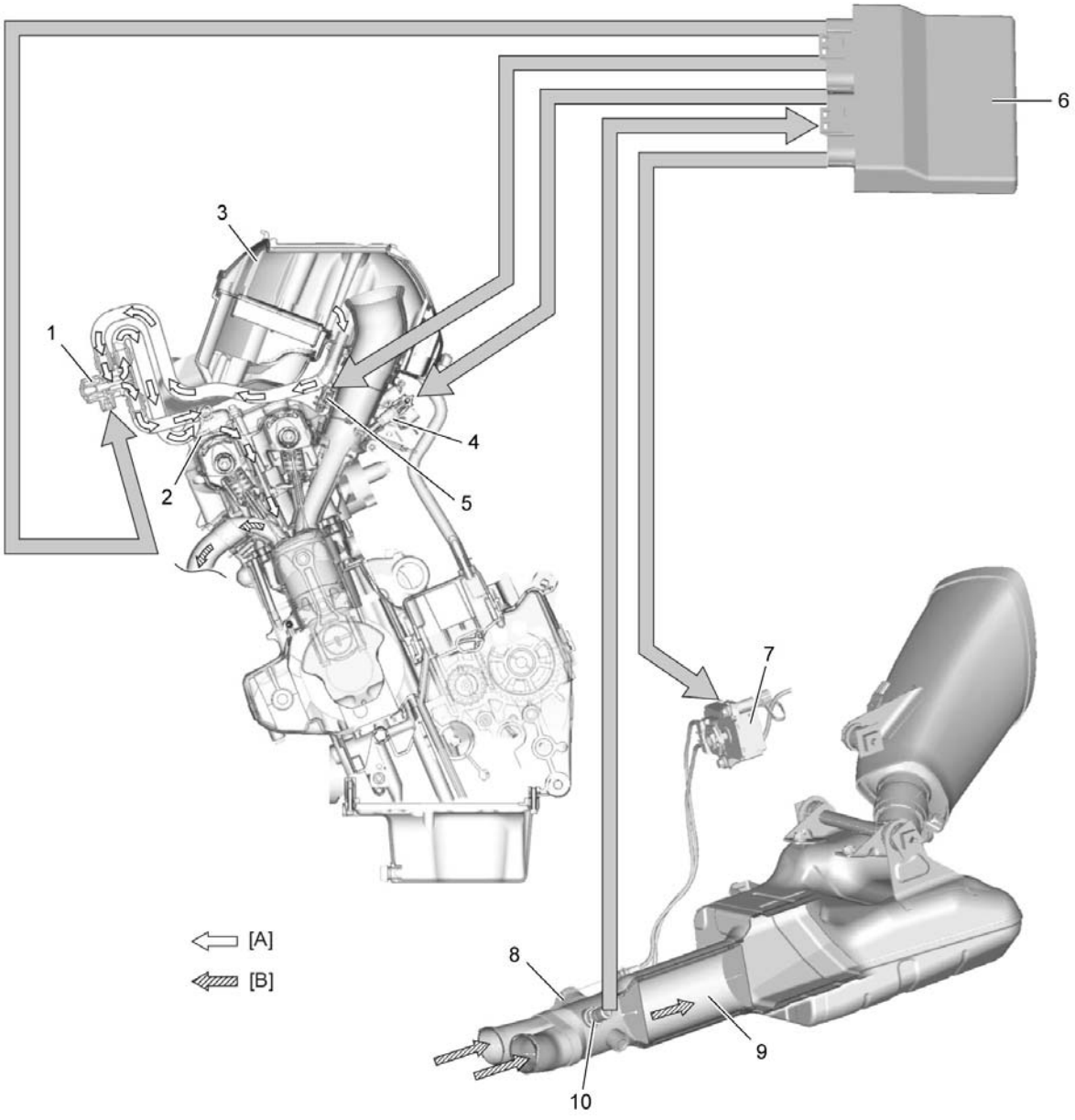

[A]:	Fresh air	2.	PAIR reed valve	5.	ISC valve	8.	Exhaust control valve
[B]:	Exhaust gas	3.	Air cleaner box	6.	ECM	9.	Three-way catalyst

1.	PAIR control solenoid valve	4.	Fuel injector	7.	Exhaust control valve actuator	10.	HO2 sensor

Fuel Injection System Description

GSX-S1000/A/F/FA motorcycles are equipped with a fuel injection system for emission level control. This fuel injection system is precision designed, manufactured and adjusted to comply with the applicable emission limits. With varying engine conditions, all of the fuel injection volumes are precisely controlled by the programmed injection maps in the ECM to reduce CO, NOX and HC. Adjusting, interfering with, improper replacement, or resetting of any of the fuel injection components may adversely affect injection performance and cause the motorcycle to exceed the exhaust emission level limits.

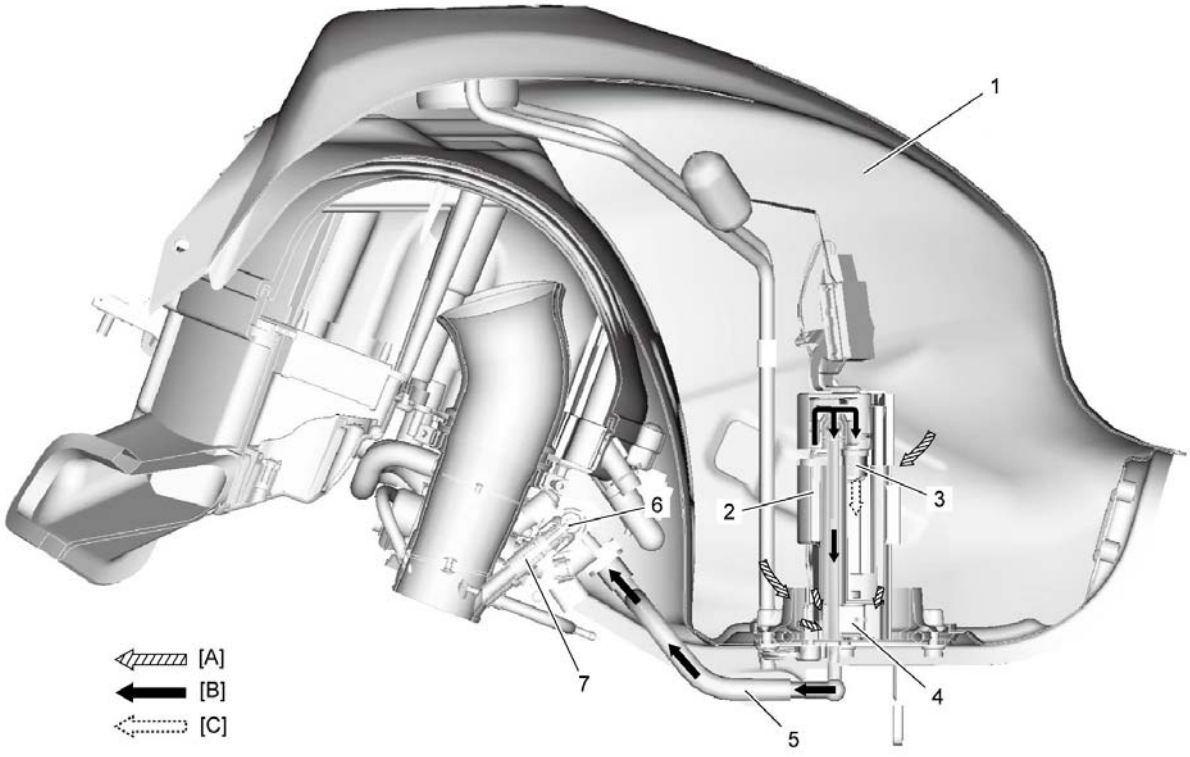

[A]:	Before-pressurized fuel	1.	Fuel tank	4.	Fuel mesh filter	7.	Fuel injector
[B]:	Pressurized fuel	2.	Fuel pump	5.	Fuel feed hose		
[C]:	Relieved fuel	3.	Fuel pressure regulator	6.	Fuel delivery pipe		

Noise Emission Control System Description

TAMPERING WITH THE NOISE CONTROL SYSTEM PROHIBITED: Local law or federal law prohibits the following acts or the causing thereof:

- The removal or rendering inoperative by any person, other than for purposes of maintenance, repair or replacement, of any device or element of design incorporated into any new vehicle for the purpose of noise control prior to its sale or delivery to the ultimate purchaser or while it is in use.
- The use of the vehicle after such device or element of design has been removed or rendered inoperative by any person.

Among Those Acts Presumed to Constitute Tampering are the Acts Listed Below:

- Removing or puncturing the muffler, baffles, header pipes, screen type spark arrester (if equipped) or any other component which conducts exhaust gases.
- Removing or puncturing the air cleaner case, air cleaner cover, baffles or any other component which conducts intake air.
- Replacing the exhaust system or muffler with a system or muffler not marked with the same model specific code as the code listed on the Motorcycle Noise Emission Control Information label.

PAIR Control Solenoid Valve Removal and Installation

Reference: PAIR System Hose Routing Diagram

Removal

1) Lift and support the fuel tank. ☞

2) Remove the air cleaner box. ☞

3) Disconnect the PAIR control solenoid valve coupler (1).

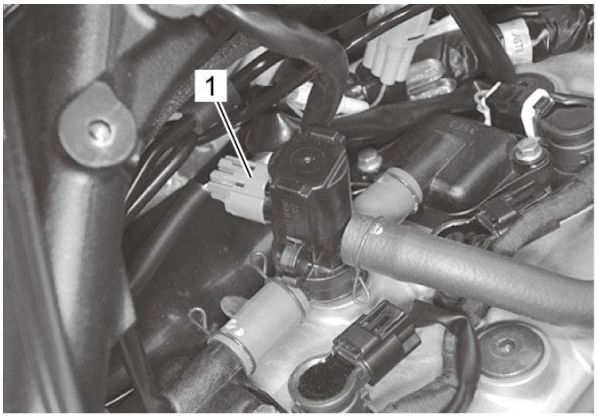

4) Remove the PAIR control solenoid valve with the PAIR reed valve covers. ☞

5) Disconnect the PAIR hoses (1).

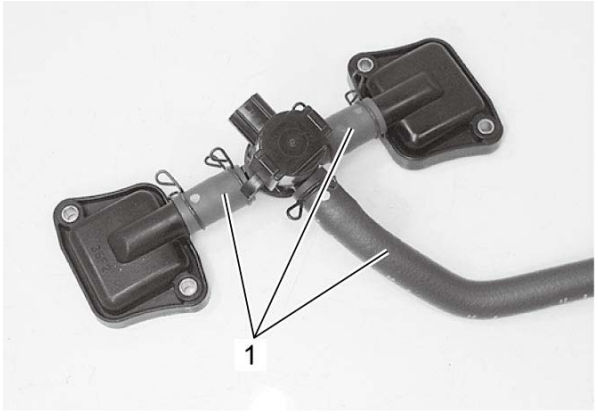

Installation

Reference: PAIR System Inspection

Install the PAIR control solenoid valve in the reverse order of removal. Pay attention to the following point:

- Connect the PAIR hoses properly. Refer to ***PAIR System Hose Routing Diagram***.

PAIR Reed Valve Removal and Installation

Removal

1) Lift and support the fuel tank. ☞
2) Remove the air cleaner box. ☞
3) Disconnect the PAIR control solenoid valve coupler (1).
4) Remove the PAIR control solenoid valve (2) with PAIR reed valve covers (3).

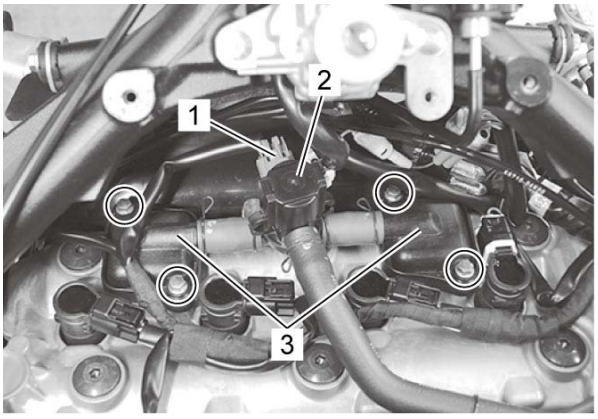

5) Remove the PAIR reed valves (1).

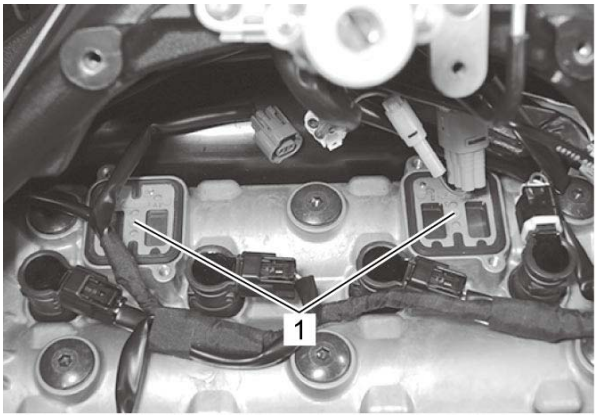

Installation

Reference: PAIR System Inspection

Install the PAIR reed valve in the reverse order of removal. Pay attention to the following point:

- Apply thread lock to the PAIR reed valve cover bolts (1) and tighten them to the specified torque.

"A": Thread lock cement 99000–32150 (THREAD LOCK CEMENT 1322D)

Tightening torque

PAIR reed valve cover bolt (a): 10 N·m (1.0 kgf-m, 7.5 lbf-ft)

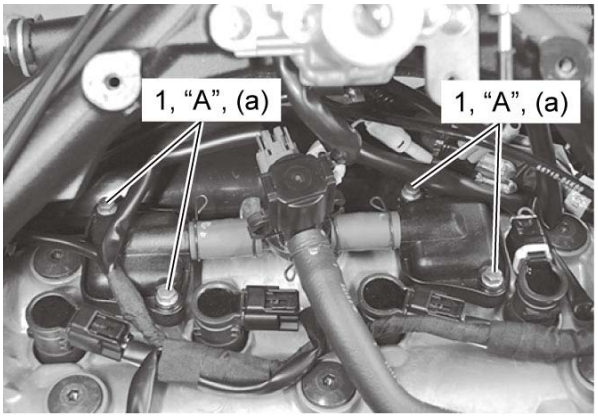
1, “A”, (a)
1, “A”, (a)

PAIR System Hose Routing Diagram

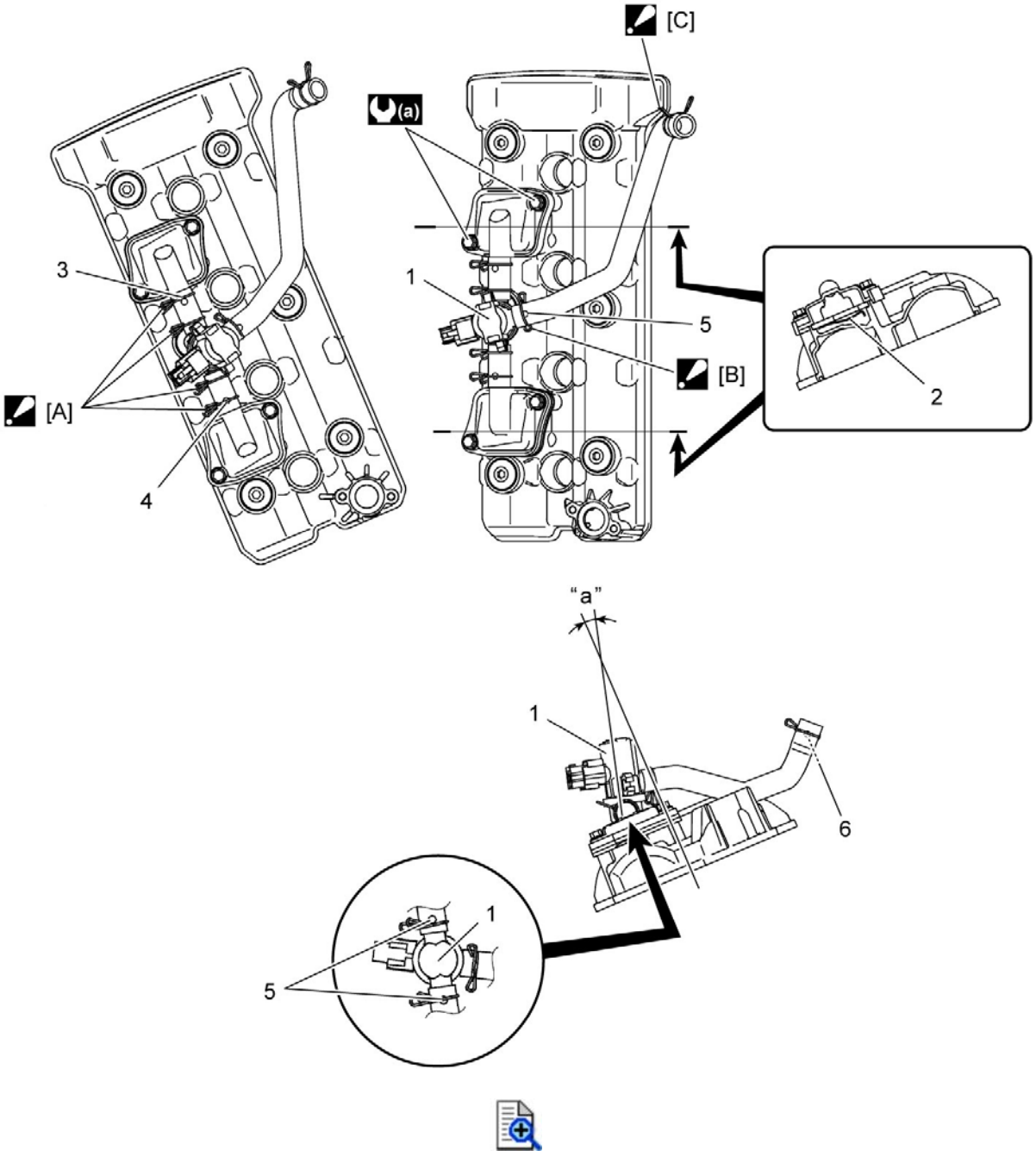

[A]:	Clamp end should face forward.	4.	Pink marking
[B]:	Clamp end should face downward.	5.	Yellow marking
[C]:	Clamp end should face right side forward. (Approx. 45°) Do not contact the frame and air cleaner box.	6.	White marking
1.	PAIR control solenoid valve	"a":	15°

2.	PAIR reed valve	(a)	10 N·m (1.0 kgf-m, 7.5 lbf-ft)
3.	Blue marking		

PAIR System Inspection

PAIR Hose

1) Lift and support the fuel tank. ☞

2) Remove the air cleaner box. ☞

3) Inspect the PAIR hoses (1) for wear or damage. If it is worn or damaged, replace the PAIR hose with a new one. Refer to ***PAIR System Hose Routing Diagram***.

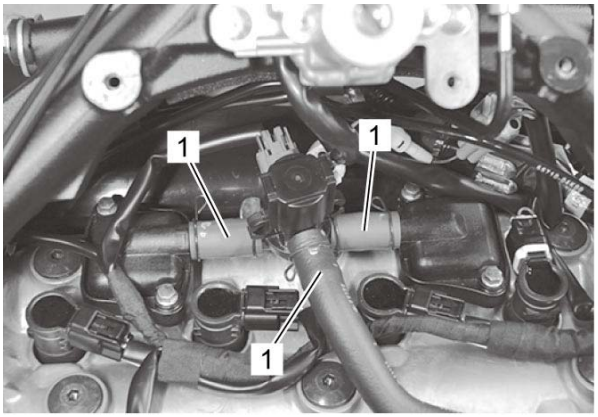

4) Install the removed parts.

PAIR Reed Valve

1) Remove the PAIR reed valves. Refer to ***PAIR Reed Valve Removal and Installation***.

2) Inspect the reed valves for carbon deposit.
If carbon deposit is found on the reed valve, replace the PAIR reed valve with a new one.



3) Install the PAIR reed valves. Refer to ***PAIR Reed Valve Removal and Installation***.

PAIR Control Solenoid Valve

NOTE:
PAIR control solenoid valve can be checked without removing it from the motorcycle.

Refer to *DTC P1656 (C49)*.

1) Remove the PAIR control solenoid valve. Refer to ***PAIR Control Solenoid Valve Removal and Installation***.

2) Check that air flows through the air inlet port to the air outlet ports. If air does not flow out, replace the PAIR control solenoid valve with a new one.

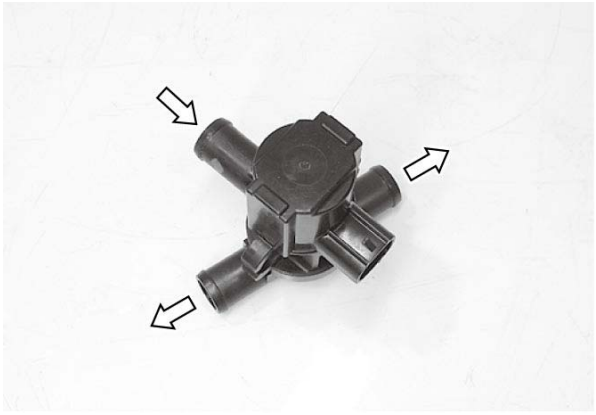

3) Connect the 12 V battery to the PAIR control solenoid valve terminals and check the air flow. If air does not flow out, the solenoid valve is in normal condition.



4) Check the resistance between the terminals of the PAIR control solenoid valve.

PAIR solenoid valve resistance

20 – 30 °C (68 – 86 °F) [Standard] 20 – 24 Ω

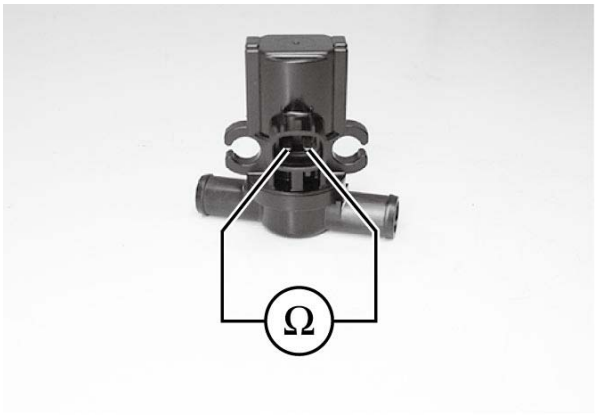

5) Reinstall the PAIR control solenoid valve. Refer to ***PAIR Control Solenoid Valve Removal and Installation***.

Tightening Torque Specifications

Fastening part	Tightening torque			Note
	N·m	kgf-m	lbf-ft	
PAIR reed valve cover bolt	10	1.0	7.5	☞
Breather cover bolt	10	1.0	7.5	☞
Canister bracket bolt	10	1.0	7.5	☞
EVAP system purge control solenoid valve nut	10	1.0	7.5	☞

Reference:
For the tightening torques of fasteners not specified in this page, refer to:
PAIR System Hose Routing Diagram
EVAP Canister Hose Routing Diagram (If Equipped)
Fasteners Information

Recommended Service Material

Material	SUZUKI recommended product or Specification		Note
Thread lock cement	THREAD LOCK CEMENT 1322D	P/No.: 99000–32150	☞

AP Sensor Inspection

AP Sensor Output Voltage at Idle Speed

1) Check the AP sensor power supply voltage and circuit. ☞
2) Turn the ignition switch OFF.
3) Connect the AP sensor coupler and ECM couplers.
4) Connect the immobilizer antenna coupler and install the fuel tank lower cover. (If equipped) Refer to ***Fuel Pressure Inspection***.
5) Insert the needle point probes to the lead wire coupler.
6) Run the engine at idle speed, measure the AP sensor output voltage between the G/Y wire and B/Br wire. If the voltage is not within the specified value, replace the AP sensor. ☞

AP sensor output voltage

Idle speed at 1 atm.
[Standard]: Approx. 2.8 V

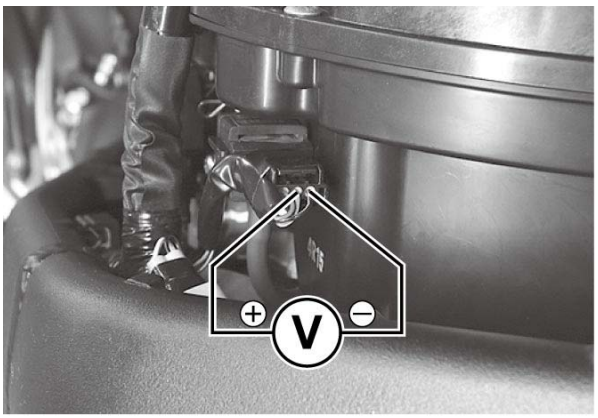

7) After finishing the AP sensor inspection, install the removed parts.

AP Sensor Output Voltage

1) Turn the ignition switch OFF.
2) Remove the AP sensor. ☞
3) Connect the vacuum pump gauge to the vacuum port of the AP sensor.
4) Arrange 3 new 1.5 V batteries (1) in series (check that total voltage is 4.5 – 5.0 V) and connect (–) terminal to the ground terminal (2) and (+) terminal to the terminal (3).
5) Measure the voltage between terminal (4) and ground. Also, check if voltage reduces when vacuum is applied using the vacuum pump gauge. If the voltage is not within the specified value, replace the AP sensor. ☞

Special Tool

(A): 09917–47011

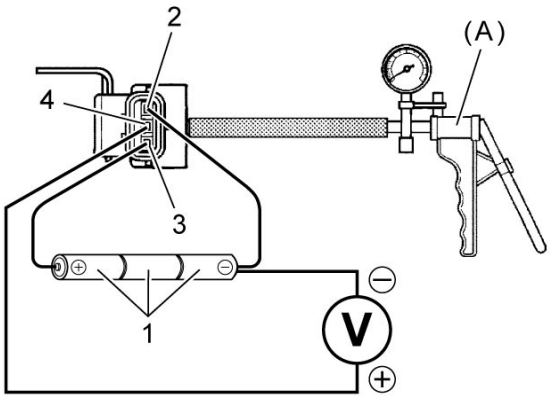

ALTITUDE (Reference)		ATOMOSPHERIC PRESSURE		OUTPUT VOLTAGE
m	ft	kPa	mmHg	V
0 – 610	0 – 2001	100 – 94	760 – 705	3.4 – 4.0
611 – 1524	2005 – 5000	94 – 85	705 – 638	3.0 – 3.7
1525 – 2438	5003 – 7999	85 – 76	638 – 570	2.6 – 3.4
2439 – 3048	8002 – 10000	76 – 70	570 – 525	2.4 – 3.1

6) After finishing the AP sensor inspection, install the removed parts.

AP Sensor Removal and Installation

Removal

1) Lift and support the fuel tank. ☞

2) Disconnect the AP sensor coupler (1) and vacuum hose (2).

3) Remove the AP sensor (3).

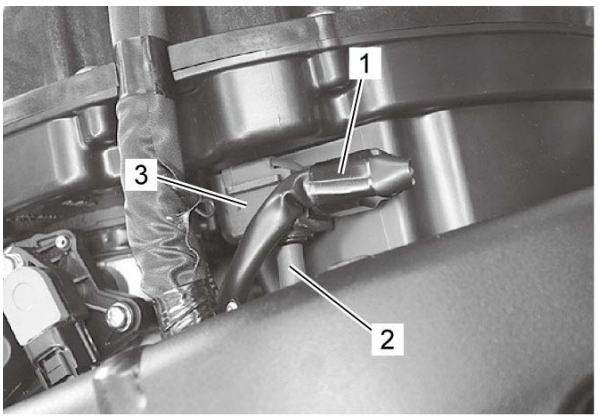

Installation

Reference: AP Sensor Inspection

Install the AP sensor in the reverse order of removal.

CKP Sensor Inspection

CKP Sensor Peak Voltage

NOTE:
Be sure that all the couplers are connected properly and the battery used is in fully charged condition.

1) Lift and support the fuel tank. ☞

2) Disconnect the CKP sensor coupler (1).

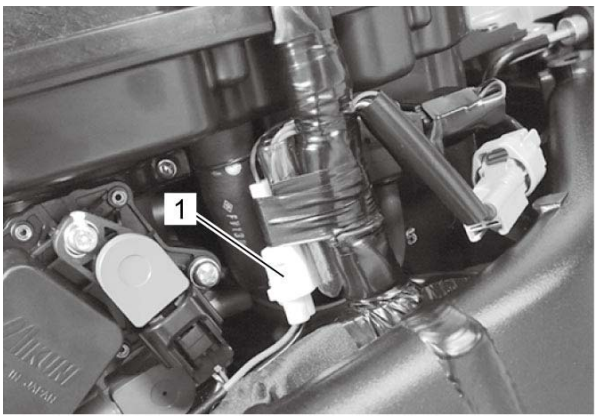

3) Connect the multi circuit tester with the peak volt adaptor (1) as follows.

CKP sensor – circuit tester connection

	(+) Probe	(–) Probe
CKP sensor (2)	B lead wire	G lead wire

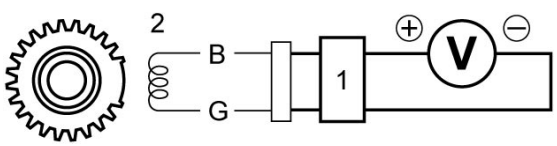

4) Measure the CKP sensor peak voltage in the following procedures:
a) Shift the transmission into neutral, turn the ignition switch ON.
b) Press the starter switch and allow the engine to crank for a few seconds, and then measure the CKP sensor peak voltage.

5) Repeat the b) procedure several times and measure the highest peak voltage.
If the voltage is lower than standard range, inspect for coupler connection and metal particles or foreign material being stuck on the CKP sensor and rotor tip. If the peak voltage is within the standard range, check the continuity between the CKP sensor coupler and ECM coupler.

CKP sensor peak voltage

When cranking [Standard]: 0.5 V or more

6) After measuring the CKP sensor peak voltage, install the removed parts.

CKP Sensor Resistance

1) Lift and support the fuel tank. ☞

2) Disconnect the CKP sensor coupler (1).

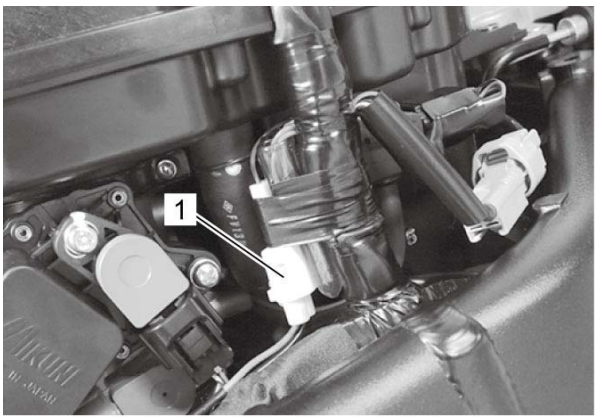

3) Check that the resistance between B lead wire of CKP sensor and ground is infinity.

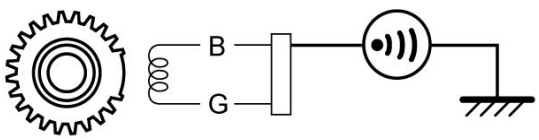

4) Measure the resistance between the B lead wire and G lead wire. If the resistance is not within the standard range, replace the CKP sensor. Refer to ***CKP Sensor Removal and Installation***.

CKP sensor resistance

20 °C (68 °F) [Standard]: Approx. 168 Ω

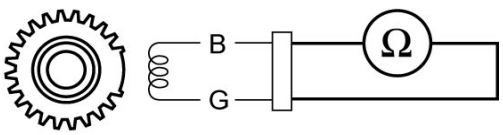

5) After measuring the CKP sensor resistance, install the removed parts.

CKP Sensor Removal and Installation

Removal

1) Lift and support the fuel tank. ☞
2) Disconnect the CKP sensor coupler (1).

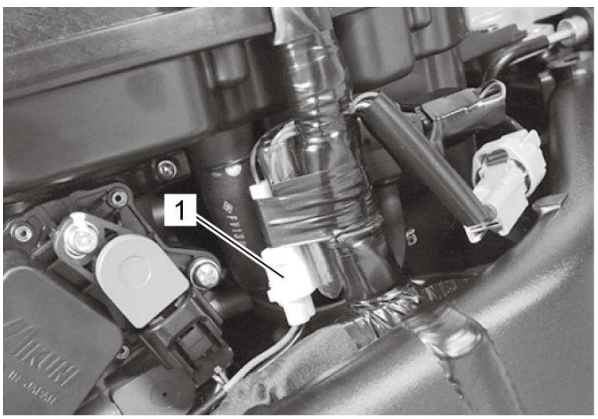

3) Remove the starter clutch. ☞
4) Remove the cam chain tension adjuster. Refer to ***Cam Chain Tension Adjuster / Camshaft Removal***.
5) Remove the cam chain tensioner bolt (1).
6) Remove the clamp (2) and CKP sensor (3).

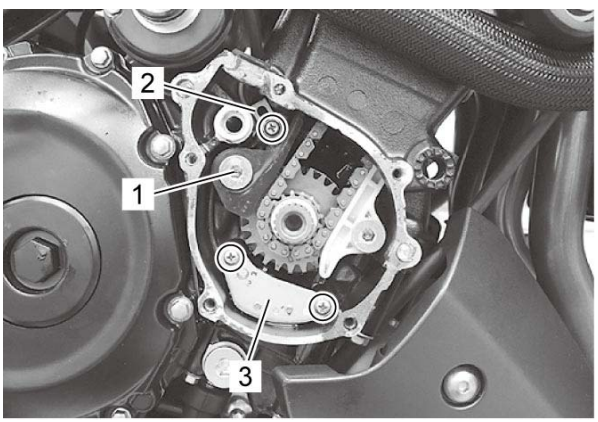

Installation

Install the CKP sensor in the reverse order of removal. Pay attention to the following points:

- Apply sealant to the grommet (1).

  "A": Sealant 99000–31140 (SUZUKI BOND 1207B)

- Tighten the CKP sensor screws (2) and clamp screw (3) to the specified torque.

Tightening torque

CKP sensor screw (a): 4.5 N·m (0.46 kgf-m, 3.35 lbf-ft)

CKP sensor lead wire clamp screw (b): 4.5 N·m (0.46 kgf-m, 3.35 lbf-ft)

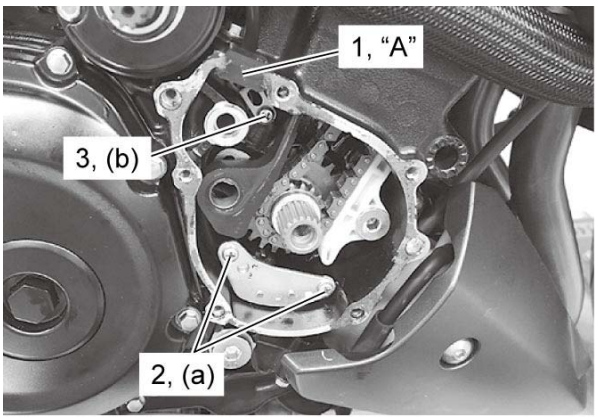

- Apply thread lock to the cam chain tensioner bolt (1) and tighten it to the specified torque.
  “A”: Thread lock cement 99000–32150 (THREAD LOCK CEMENT 1322D)

  Tightening torque
  Cam chain tensioner bolt (a): 23 N·m (2.3 kgf-m, 17.0 lbf-ft)

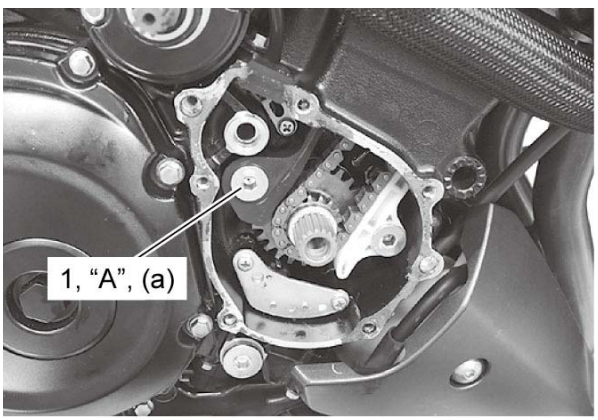

- Route the CKP sensor lead wire. Refer to ***Wiring Harness Routing Diagram***.

ECM Removal and Installation

Removal

NOTICE:
Be careful not to disconnect the ISC valve coupler at least 5 seconds after ignition switch is turned to OFF. If the ECM coupler or ISC valve coupler is disconnected within 5 seconds after ignition switch is turned to OFF, there is a possibility of an unusual valve position being written in ECM and causing an error of ISC valve operation.

1) Disconnect the battery (–) lead wire. ☞
2) Lift and support the fuel tank. ☞
3) Remove the band (1).
4) Disconnect the ECM couplers (2) and remove the ECM (3).

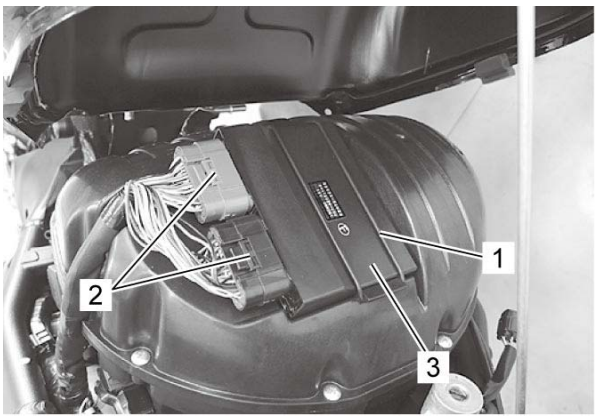

Installation

Install the ECM in the reverse order of removal.

ECT Sensor Inspection

Refer to ***ECT Sensor Removal and Installation***.
Measure the resistance between terminals of the ECT sensor (1). Make sure that the resistance value decreases as temperature increase. If measured resistance does not change as specified, replace ECT sensor with a new one.

NOTICE:
- **Handle the ECT sensor carefully as it will easily be broken if it receives excessively large shocks or forces.**
- **Keep the ECT sensor and thermometer (2) not in contact with the heater's water container.**

ECT sensor resistance

–20 °C (–4 °F) [Standard]: 13840 – 16330 Ω
20 °C (68 °F) [Standard]: 2320 – 2590 Ω
80 °C (176 °F) [Standard]: 310 – 326 Ω

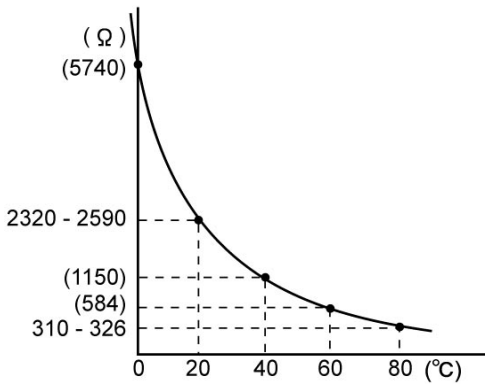

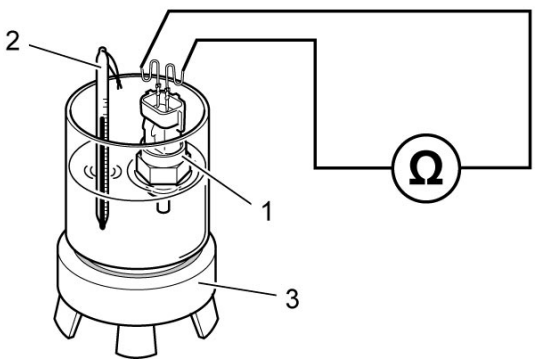

3.	Heater

ECT Sensor Removal and Installation

Removal

1) Drain engine coolant. ☞
2) Lift and support the fuel tank. ☞
3) Disconnect the ECT sensor coupler (1) and remove the ECT sensor (2).

NOTICE:
Take special care when handling the ECT sensor. It may cause damage if it gets an excessive impact.

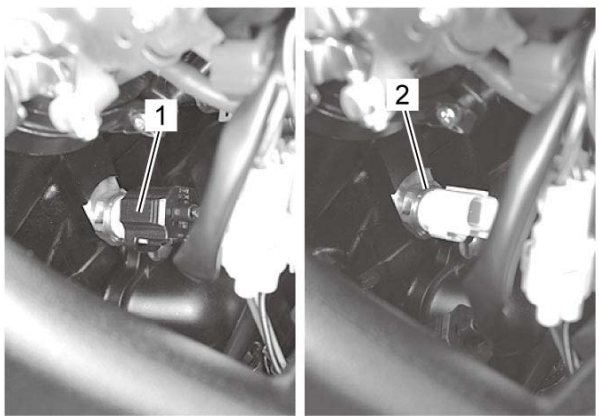

Installation

Reference: ECT Sensor Inspection

Install the ECT sensor in the reverse order of removal.
Pay attention to the following point:

- Install the new gasket (1) and tighten the ECT sensor (2) to the specified torque.

Tightening torque

ECT sensor (a): 18 N·m (1.8 kgf-m, 13.5 lbf-ft)

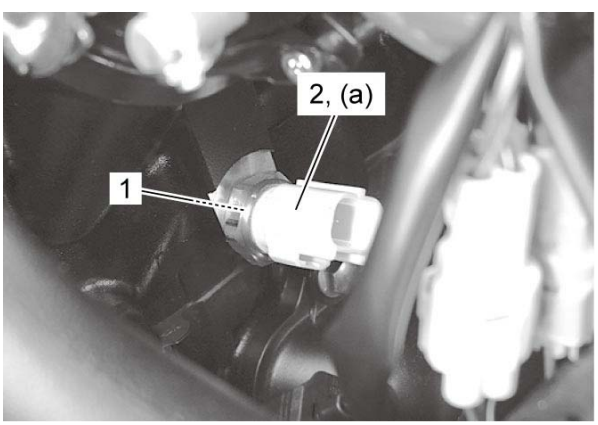

HO2 Sensor Inspection

HO2 Sensor Output Voltage

1) Lift and support the fuel tank. ☞

2) Connect the immobilizer antenna coupler and install the fuel tank lower cover. (If equipped) Refer to ***Fuel Pressure Inspection***.

3) Start the engine and warm up the engine enough.

4) Disconnect the HO2 sensor coupler. ☞

5) Measure the HO2 sensor output voltage between the B wire and Gr wire, in idling condition.

6) If OK, then pinch the PAIR hose (1) with a proper hose clamp.

7) Measure the HO2 sensor output voltage while holding the engine speed at 5000 r/min.

HO2 sensor output voltage

Idle speed [Standard]: 0.6 V or less
5000 r/min [Standard]: 0.6 V or more

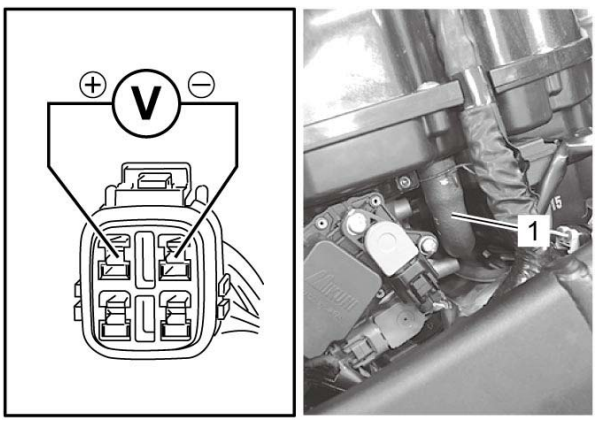

8) If the HO2 sensor output voltage is not within the standard range, replace the HO2 sensor. ☞

9) After finishing the HO2 sensor inspection, remove a proper hose clamp and install the removed parts.

HO2 Sensor Heater Resistance

1) Lift and support the fuel tank. ☞

2) Disconnect the HO2 sensor coupler (1).

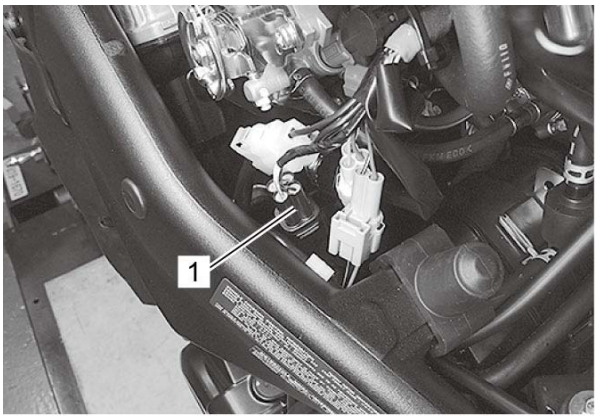

3) Measure the HO2 sensor heater resistance between the terminals of the HO2 sensor. If the resistance is out of the specified value, replace the HO2 sensor. ☞

HO2 sensor heater resistance

23 °C (73.4 °F) [Standard]: 11.5 – 17.5 Ω

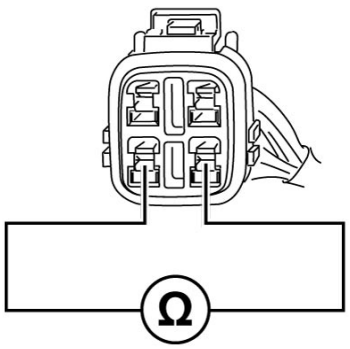

4) After finishing the HO2 sensor inspection, install the removed parts.

HO2 Sensor Removal and Installation

Removal

⚠WARNING:
Do not remove the HO2 sensor while it is hot.

NOTICE:
- **Be careful not to expose the HO2 sensor to excessive shock.**
- **Do not use an impact wrench when removing or installing the HO2 sensor.**
- **Be careful not to twist or damage the sensor lead wire.**

1) Lift and support the fuel tank. ☞

2) Remove the following parts.
- Left under cowling (GSX-S1000/A): ☞
- Left side cowling assembly (GSX-S1000F/FA): ☞

3) Disconnect the HO2 sensor coupler (1).

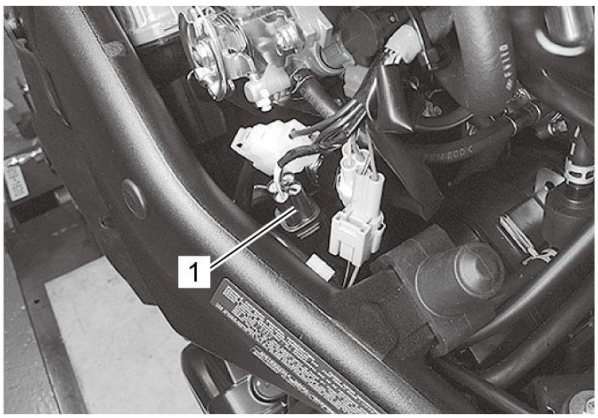

4) Remove the HO2 sensor (1).

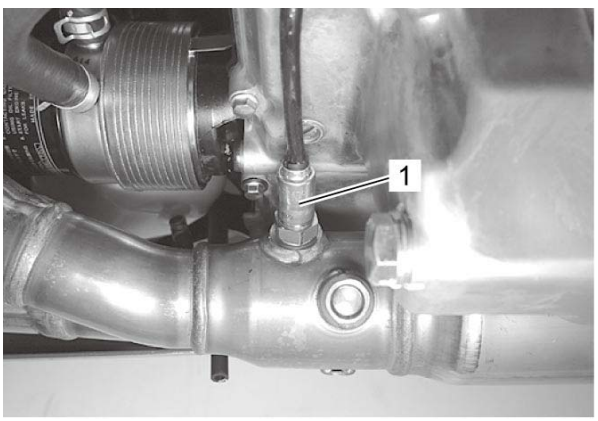

Installation

Install the HO2 sensor in the reverse order of removal. Pay attention to the following points:

- Apply nickel based anti seize to the thread part of HO2 sensor (1).
- Tighten the HO2 sensor (1) to the specified torque.

Tightening torque

HO2 sensor (a): 25 N·m (2.5 kgf-m, 18.5 lbf-ft)

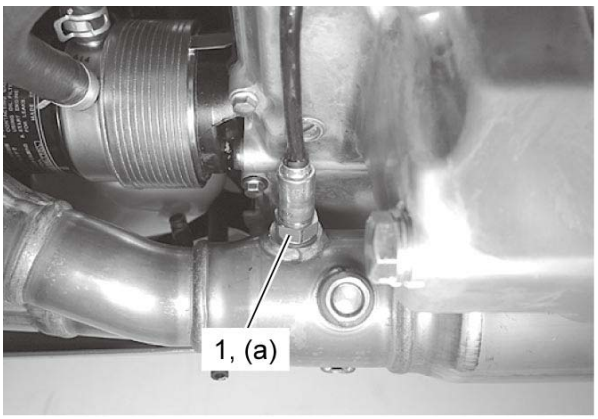

- Route the HO2 sensor lead wire. Refer to ***Fuel Tank Water Drain Hose and Fuel Tank Breather Hose Routing Diagram***.

IAP Sensor Inspection

IAP Sensor Output Voltage at Idle Speed

1) Check the IAP sensor power supply voltage and circuit. ☞
2) Turn the ignition switch OFF.
3) Connect the IAP sensor coupler and ECM couplers.
4) Connect the immobilizer antenna coupler and install the fuel tank lower cover. (If equipped) Refer to ***Fuel Pressure Inspection***.
5) Insert the needle point probes to the lead wire coupler.
6) Run the engine at idle speed, measure the IAP sensor output voltage between the G/B wire and B/Br wire. If the voltage is not within the specified value, replace the IAP sensor. ☞

IAP sensor output voltage

Idle speed at 1 atm.
[Standard]: Approx. 2.7 V

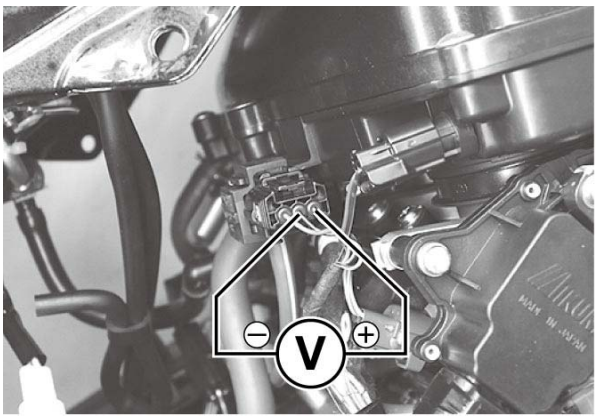

7) After finishing the IAP sensor inspection, install the removed parts.

IAP Sensor Output Voltage

1) Turn the ignition switch OFF.
2) Remove the IAP sensor. ☞
3) Connect the vacuum pump gauge to the vacuum port of the IAP sensor.
4) Arrange 3 new 1.5 V batteries (1) in series (check that total voltage is 4.5 – 5.0 V) and connect (–) terminal to the ground terminal (2) and (+) terminal to the terminal (3).
5) Measure the voltage between terminal (4) and ground. Also, check if voltage reduces when vacuum is applied using the vacuum pump gauge. If the voltage is not within the specified value, replace the IAP sensor. ☞

Special Tool

(A): 09917–47011

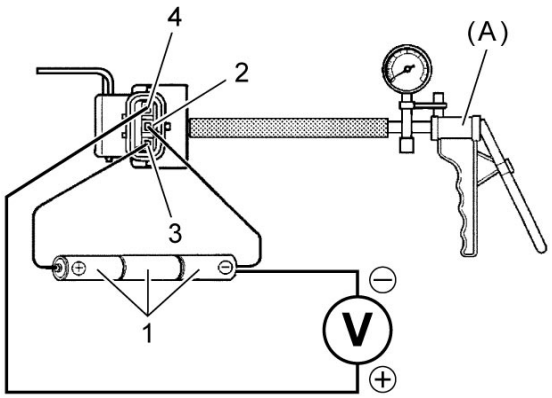

ALTITUDE (Reference)		ATOMOSPHERIC PRESSURE		OUTPUT VOLTAGE
m	ft	kPa	mmHg	V
0 – 610	0 – 2001	100 – 94	760 – 705	3.1 – 3.6
611 – 1524	2005 – 5000	94 – 85	705 – 638	2.8 – 3.4
1525 – 2438	5003 – 7999	85 – 76	638 – 570	2.6 – 3.1
2439 – 3048	8002 – 10000	76 – 70	570 – 525	2.4 – 2.9

6) After finishing the IAP sensor inspection, install the removed parts.

IAP Sensor Removal and Installation

Removal

1) Lift and support the fuel tank.

2) Disconnect the IAP sensor coupler (1) and vacuum hose (2).

3) Remove the IAP sensor (3).

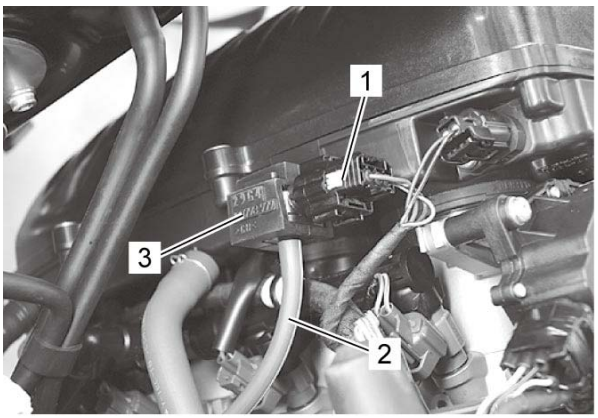

Installation

Reference: IAP Sensor Inspection

Install the IAP sensor in the reverse order of removal.

IAT Sensor Inspection

Refer to ***IAT Sensor Removal and Installation***.
Measure the IAT sensor resistance. Make sure that the resistance value decreases as temperature increase. If measured resistance does not change as specified, replace IAT sensor with a new one.

NOTE:
IAT sensor resistance measurement method is the same way as that of the ECT sensor.

IAT sensor resistance

0 °C (32 °F) [Standard]: 5400 – 6600 Ω
80 °C (176 °F) [Standard]: 290 – 390 Ω

IAT Sensor Removal and Installation

Removal

1) Lift and support the fuel tank. ☞

2) Disconnect the IAT sensor coupler (1) and remove the IAT sensor (2).

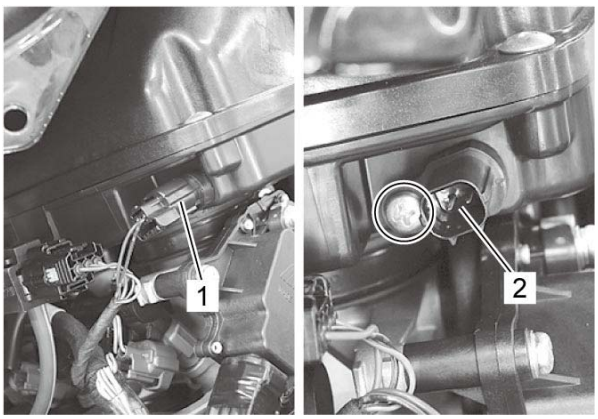

Installation

Reference: IAT Sensor Inspection

Install the IAT sensor in the reverse order of removal. Pay attention to the following point:

- Install the new O-ring (1) and tighten the IAT sensor screw (2) to the specified torque.

Tightening torque

IAT sensor screw (a): 1.3 N·m (0.13 kgf-m, 0.95 lbf-ft)

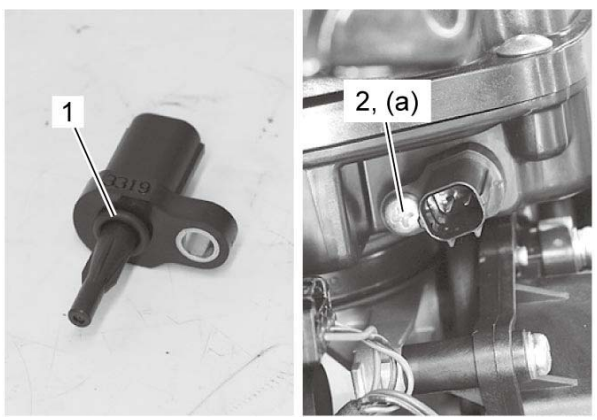

ISC Aperture Learned Value Reset

When replacing the throttle body assembly or ISC valve with a new one or reinstalling the ISC valve, reset the ISC aperture learned value in the following procedures:

1) Remove the rear seat. ☞

2) Set up the SDS tool referring to the SDS operation manual for further details.

3) Turn the ignition switch ON.

4) Click the “Active control”.

5) Click the “ISC aperture learned value reset”.

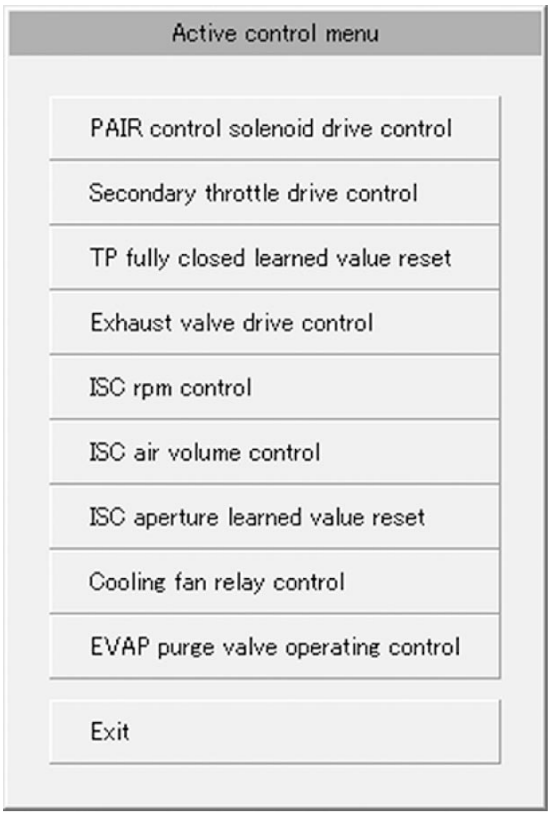

6) Click the “Reset” button to clear the ISC aperture learned value.





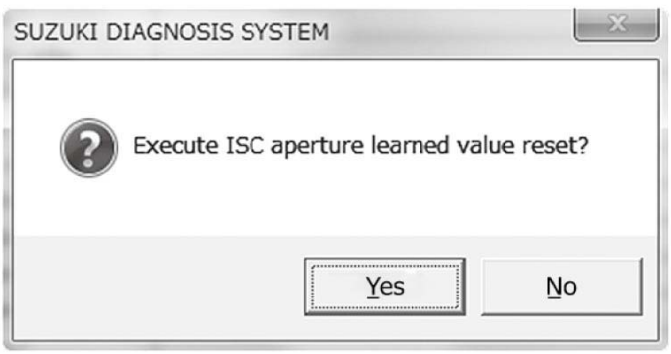



NOTE:
The learned value of the ISC valve is set at Preset position.

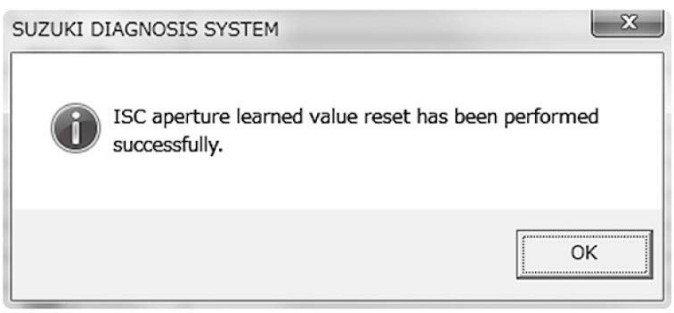



7) Close the SDS tool and turn the ignition switch OFF.

NOTE:
The ISC valve opening initialization is automatically started after the ignition switch is turned OFF position.

ISC Valve Inspection

1) Remove the air cleaner box. ☞

2) Disconnect the ISC valve coupler (1).

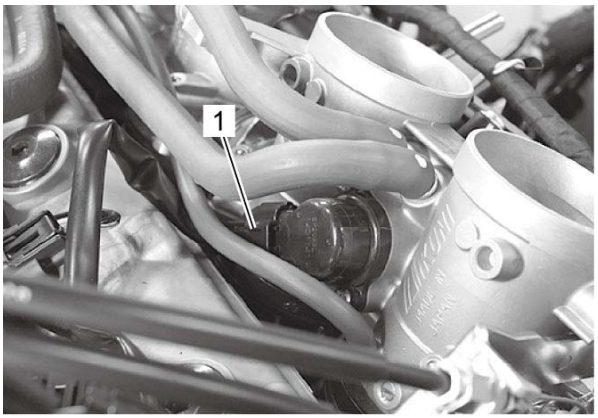

3) Loosen the intake pipe clamp screws and move the throttle body. Refer to ***Throttle Body Removal and Installation***.

4) Check that the resistance between each terminal of ISC valve and ground is infinity.

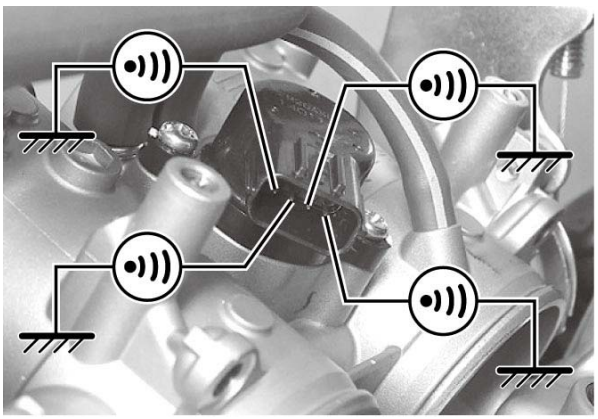

5) Measure the resistance between the W/Y wire terminal (1) and Lg wire terminal (2), and between the Dbr wire terminal (3) and Lbl wire terminal (4). If the resistance is out of the specified value, replace the ISC valve. ☞

ISC valve resistance

20 °C (68 °F) [Standard]: Approx. 20 Ω

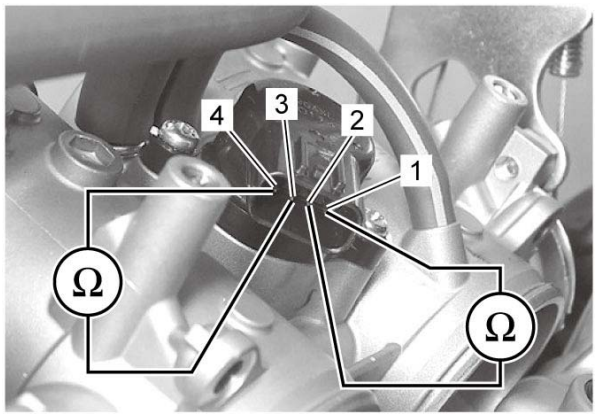

6) After finishing the ISC valve inspection, install the removed parts.

ISC Valve Removal and Installation

Refer to ***Air Cleaner Box Removal and Installation***.

Removal

NOTICE:
Be careful not to disconnect the ISC valve coupler at least 5 seconds after ignition switch is turned to OFF. If the ECM coupler or ISC valve coupler is disconnected within 5 seconds after ignition switch is turned to OFF, there is a possibility of an unusual valve position being written in ECM and causing an error of ISC valve operation.

1) Disconnect the ISC valve coupler (1).
2) Remove the ISC valve (2).

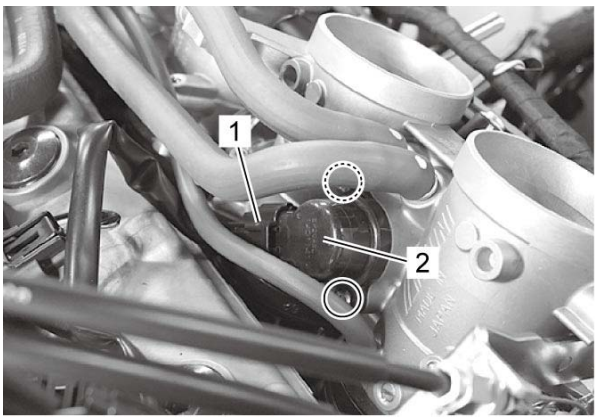

Installation

1) Apply a thin coat of engine oil to the new O-ring (1) and install it.



2) Install the ISC valve to the throttle body and tighten the ISC valve mounting screws (1) to the specified torque.

Tightening torque
ISC valve mounting screw (a): 2 N·m (0.20 kgf-m, 1.50 lbf-ft)

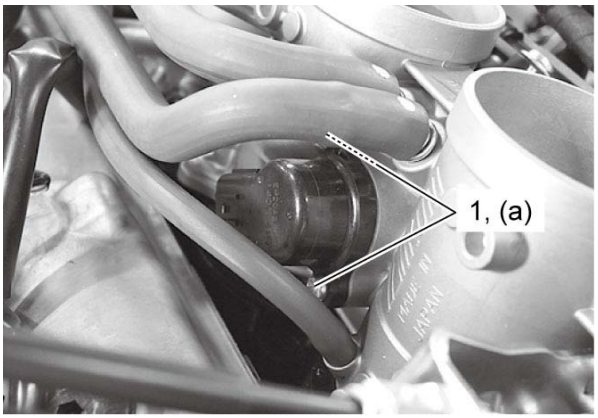

3) Connect the ISC valve coupler.

4) After installing the removed parts, reset the ISC aperture learned value. ☞

STP Sensor Inspection and Adjustment

1) Check the STP sensor power supply voltage and circuit. ☞
2) Turn the ignition switch OFF.
3) Remove the air cleaner box. ☞
4) Connect the ECM couplers.
5) Disconnect the STVA coupler (1).
6) Connect the special tool between the STP sensor and its coupler.

Special Tool

(A): 09900–28631

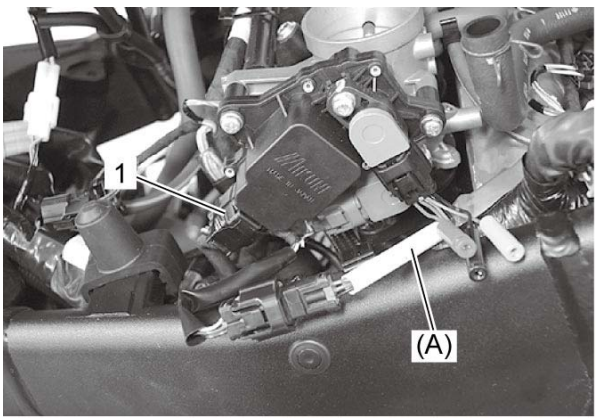

7) Turn the ignition switch ON.
8) Measure the voltage between the Y/W wire and B/Br wire by turning the STV close and open with your finger.

Special Tool

(A): 09900–28631

STP sensor output voltage

Closed [Standard]: 0.57 – 0.67 V
Opened [Standard]: Approx. 4.5 V

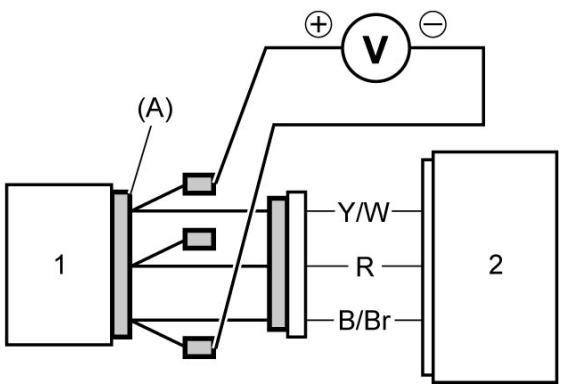

1.	STP sensor	2.	ECM

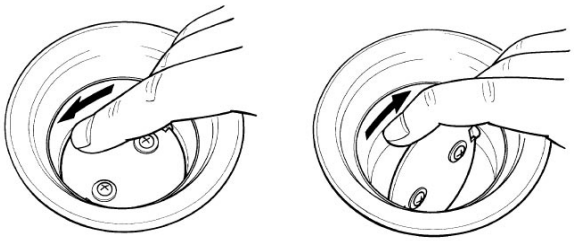

9) If voltage is not within the specified value, loosen the STP sensor mounting screw (1) with the special tool.

Special Tool

09930–11950

10) Adjust the STP sensor (2) until the output voltage comes within the specified value.

11) Tighten the STP sensor mounting screw (1) to the specified torque.

Tightening torque

STP sensor mounting screw (a): 3.5 N·m (0.36 kgf-m, 2.60 lbf-ft)

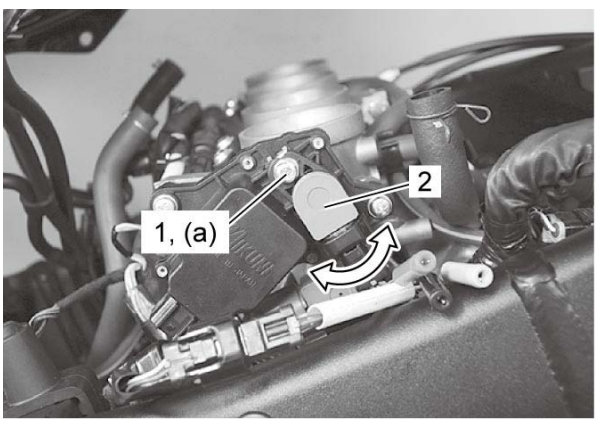

12) Remove the special tool and install the removed parts.

STP Sensor Removal and Installation

Removal

1) Turn the ignition switch OFF.
2) Remove the ECM and air cleaner box. ☞
3) Disconnect the STP sensor coupler (1).
4) Prior to disassembly, mark the sensor's original position with a paint or scribe for accurate reinstallation.
5) Remove the STP sensor (2) with the special tool.

Special Tool
09930–11950

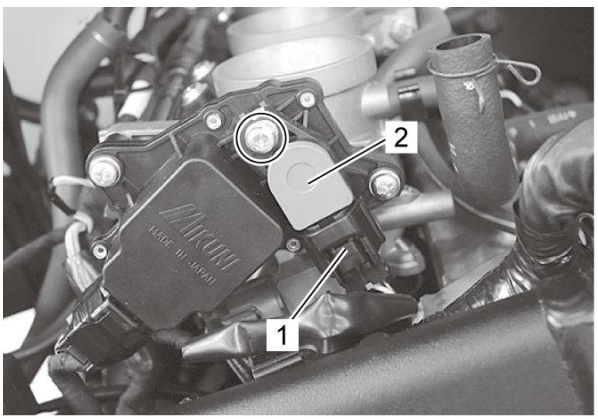

Installation

1) Close the STV by finger.

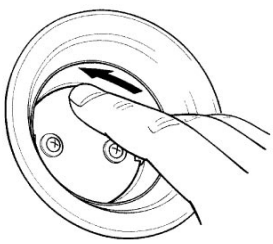

2) Apply a thin coat of engine oil to the new O-ring (1).
3) With the STV fully closed, install the STP sensor (2) aligning the secondary throttle shaft end (3) with the groove (4) of the STP sensor.

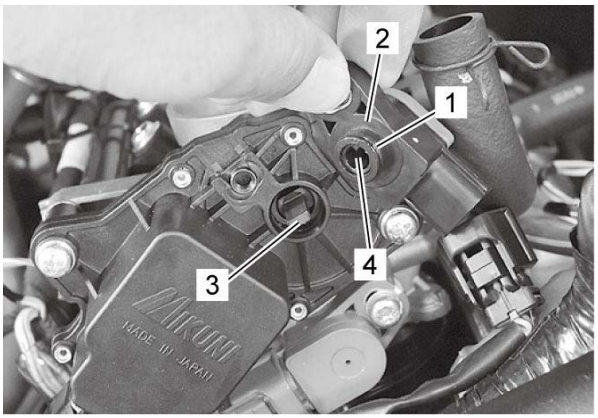

4) Tighten the STP sensor mounting screw (1) to the specified torque.

Special Tool

09930–11950

Tightening torque

STP sensor mounting screw (a): 3.5 N·m (0.36 kgf-m, 2.60 lbf-ft)

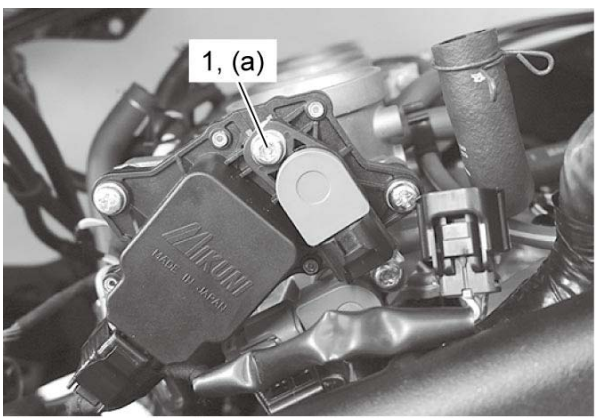

5) Check the STV operating smoothly.

6) Adjust the position of STP sensor. ☞

7) Install the removed parts.

STV Actuator Inspection

NOTICE:
Never remove the STVA (1) from the throttle body. It is available only as a throttle body assembly.

1) Lift and support the fuel tank. ☞

2) Disconnect the STVA coupler (1).

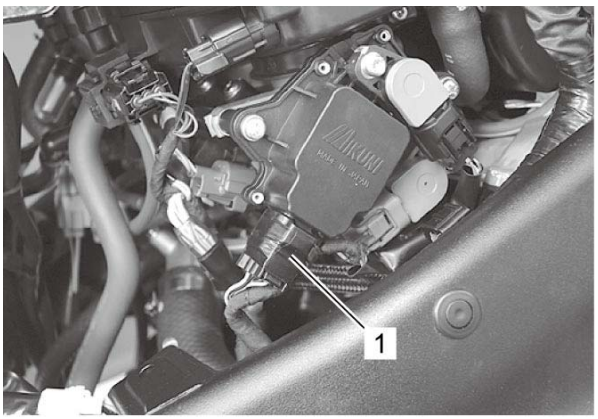

3) Check that the resistance between each terminal of STVA and ground is infinity.

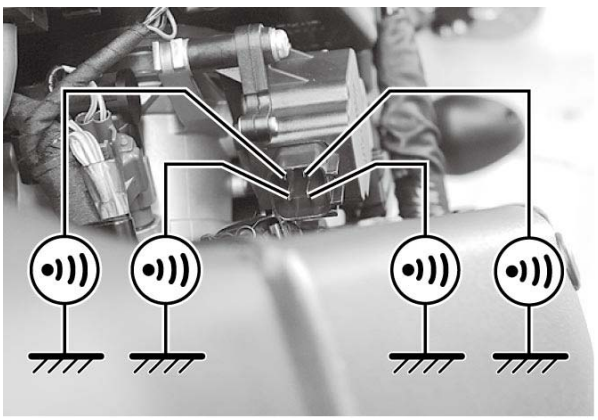

4) Measure the resistance between the W/B wire terminal (1) and G wire terminal (3), and between the B/Lg wire terminal (2) and P/W wire terminal (4). If the resistance is out of the specified value, replace the throttle body assembly. ☞

STVA resistance
[Standard]: Approx. 7.8 Ω

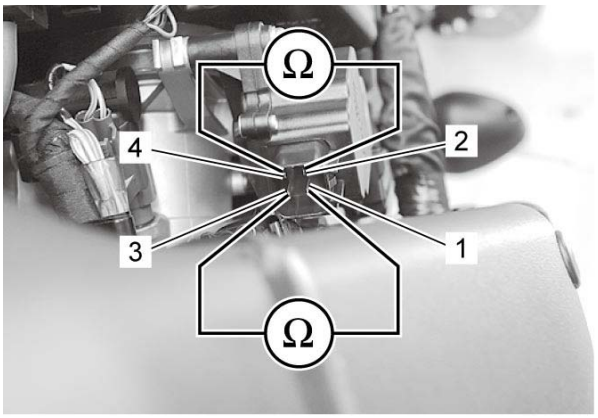

5) After finishing the STVA inspection, install the removed parts.

TO Sensor Inspection

TO Sensor Output Voltage

1) Check the TO sensor power supply voltage and circuit. ☞

2) Turn the ignition switch OFF and connect the ECM couplers.

3) Dismount the TO sensor from its bracket and connect the TO sensor coupler.

4) Insert the needle point probes to the lead wire coupler.

5) Turn the ignition switch ON, measure the TO sensor output voltage between the Br/W wire and B/Br wire. If the voltage is not within the specified value, replace the TO sensor. ☞

TO sensor output voltage

Normal [Standard]: 0.4 – 1.4 V
Leaning 65° [Standard]: 3.7 – 4.4 V

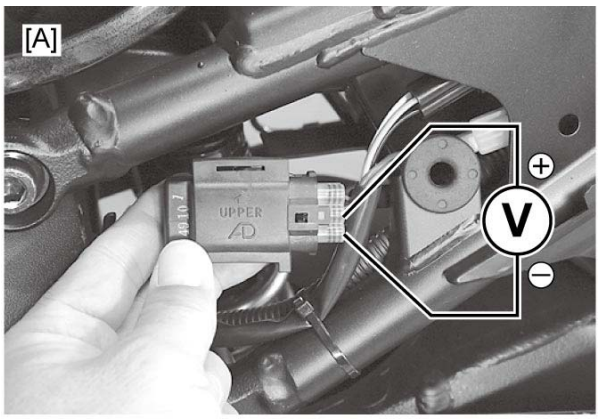

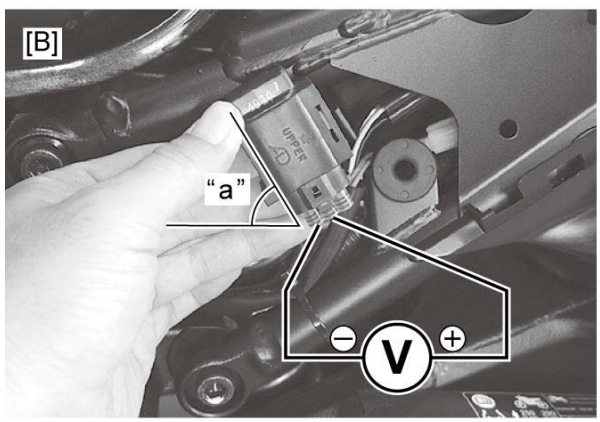

[A]:	When sensor is horizontal (normal) level.
[B]:	When sensor is leaned 65° "a" or more, left and right, from the horizontal level.

6) After finishing the TO sensor inspection, install the removed parts.

TO Sensor Resistance

1) Remove the TO sensor. ☞

2) Measure the resistance between R wire terminal (1) and B/Br wire terminal (2). If the resistance is out of the specified value, replace the TO sensor. ☞

TO sensor resistance

[Standard]: 16500 – 22300 Ω

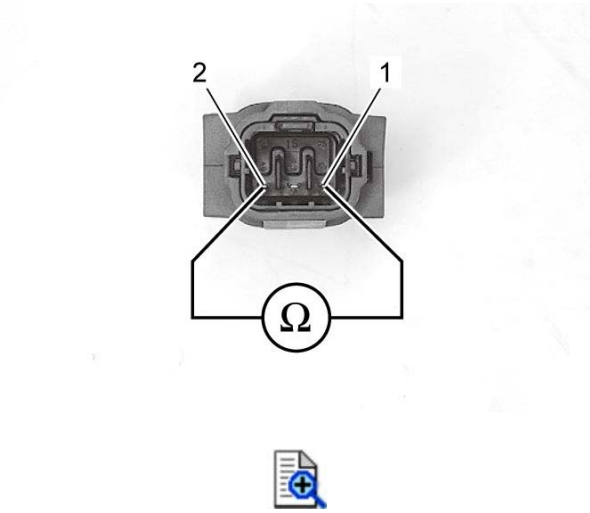

3) After finishing the TO sensor inspection, install the removed parts.

TO Sensor Removal and Installation

Removal

1) Remove the left frame rear upper cover. ☞

2) Disconnect the coupler (1) and remove the TO sensor (2).

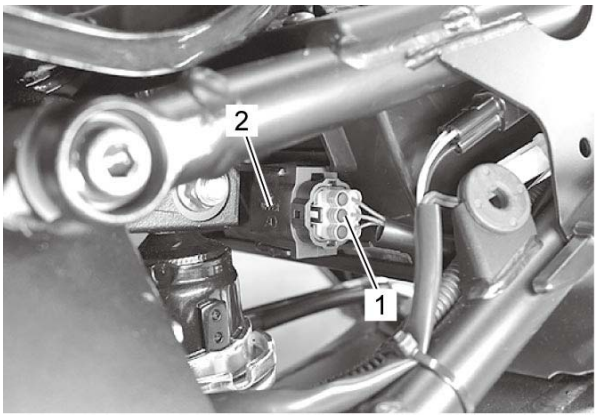

Installation

Install the TO sensor in the reverse order of removal. Pay attention to the following point:

- When installing the TO sensor, bring the “UPPER” letters (1) upward.

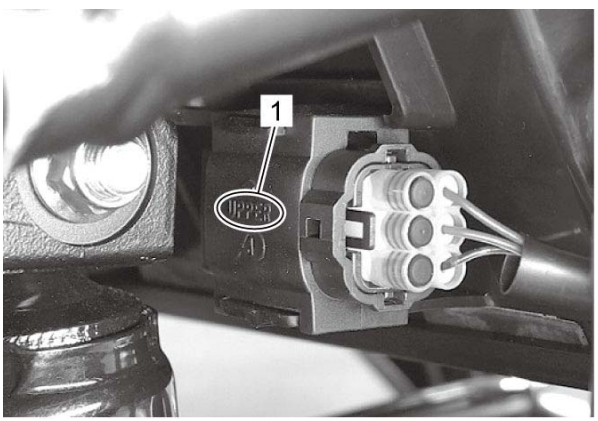

TP Fully Closed Learned Value Reset

When replacing the throttle body assembly or TP sensor with a new one or reinstalling the TP sensor, reset the TP fully closed learned value in the following procedures:

1) Remove the rear seat. ☞

2) Set up the SDS tool referring to the SDS operation manual for further details.

3) Turn the ignition switch ON.

4) Click the “Active control”.

5) Click the “TP fully closed learned value reset”.

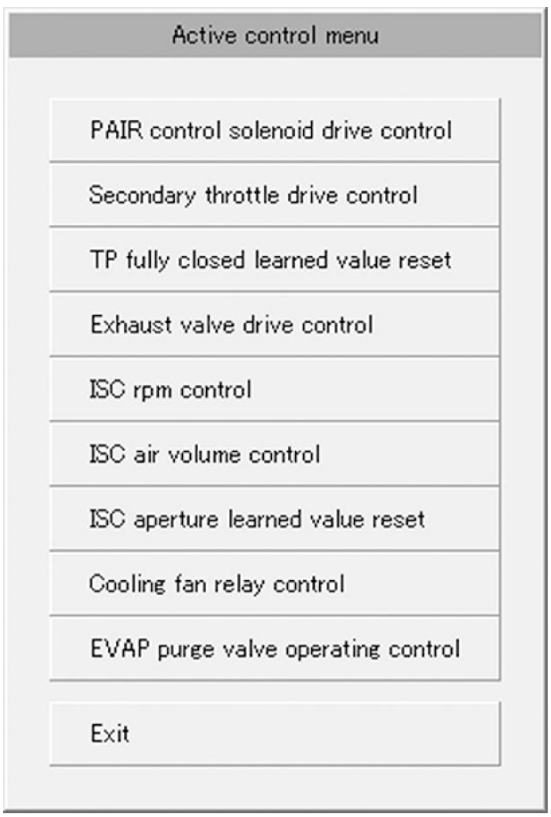

6) Click the “Reset” button to clear the TP fully closed learned value.

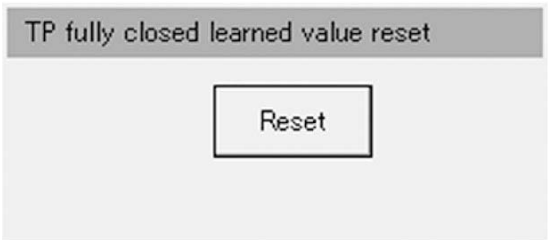



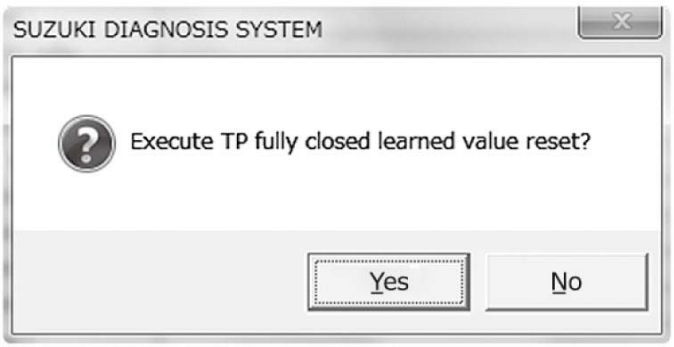



NOTE:
The learned value of the TP sensor is set at Preset position.

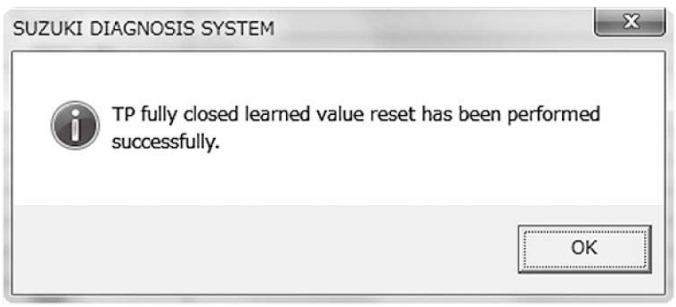



7) Close the SDS tool and turn the ignition switch OFF.

NOTE:
The TP sensor opening initialization is automatically started after the ignition switch is turned OFF position.

TP Sensor Adjustment

1) Check that the throttle cable play is within the specification. ☞
2) Remove the rear seat. ☞
3) Connect the special tool to the mode select coupler (6P).

Special Tool

(A): 09930–82720

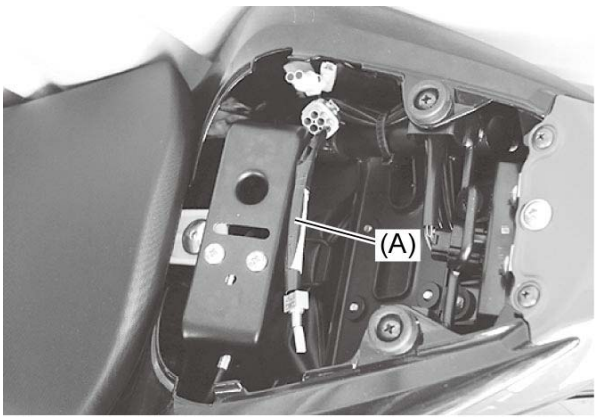

4) After turning the special tool's switch ON, turn the ignition switch ON.
5) Check the position of the bar in the left of C code displayed on the LCD panel.

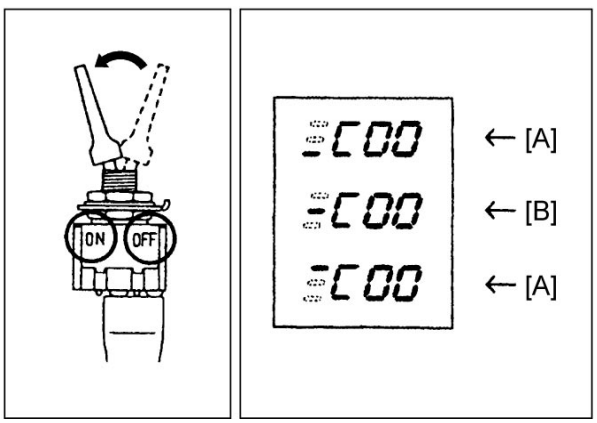

[A]:	Incorrect position	[B]:	Correct position

6) If the TP sensor adjustment is necessary, lift and support the fuel tank. ☞
7) Disconnect the STP sensor coupler (1).
8) Loosen the TP sensor mounting screw (2) with the special tool and turn the TP sensor (3) to bring the bar to the correct position.

Special Tool

09930–11950

9) Tighten the TP sensor mounting screw (2) to the specified torque.

Tightening torque

TP sensor mounting screw (a): 3.5 N·m (0.36 kgf-m, 2.60 lbf-ft)

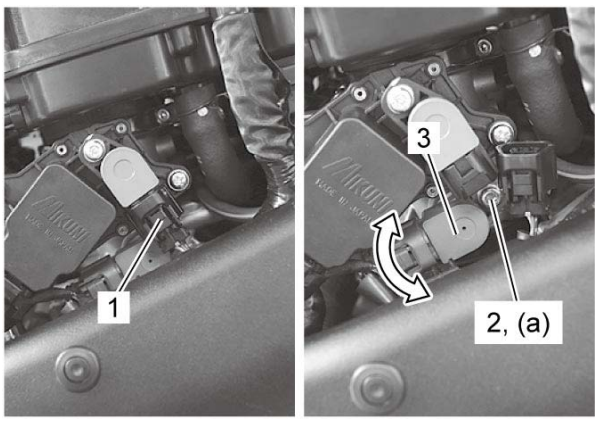

10) Disconnect the special tool and reset the TP fully closed learned value. ☞

11) After finishing the TP sensor adjustment, install the removed parts.

TP Sensor Inspection

1) Check that the throttle cable play is within the specification. ☞
2) Check the TP sensor power supply voltage and circuit. ☞
3) Turn the ignition switch OFF and connect the ECM couplers.
4) Connect the special tool between the TP sensor and its coupler.

Special Tool

(A): 09900–28631

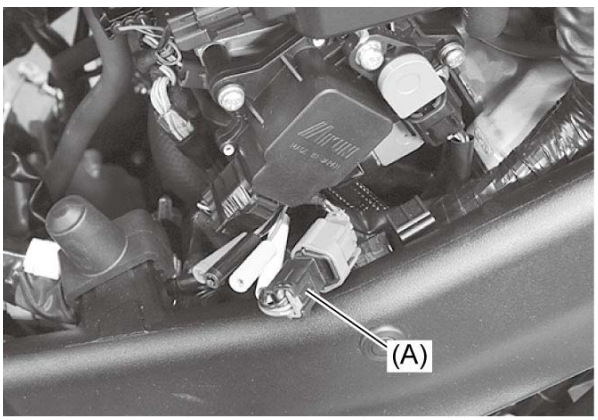

5) Turn the ignition switch ON.
6) Measure the voltage between the P/B wire and B/Br wire by turning the throttle grip open and close. If the voltage is not within the specified value, adjust or replace the TP sensor. Refer to ***TP Sensor Adjustment*** or ***TP Sensor Removal and Installation***.

Special Tool

(A): 09900–28631

TP sensor output voltage

Closed [Standard]: 1.10 – 1.14 V
Opened [Standard]: Approx. 4.5 V

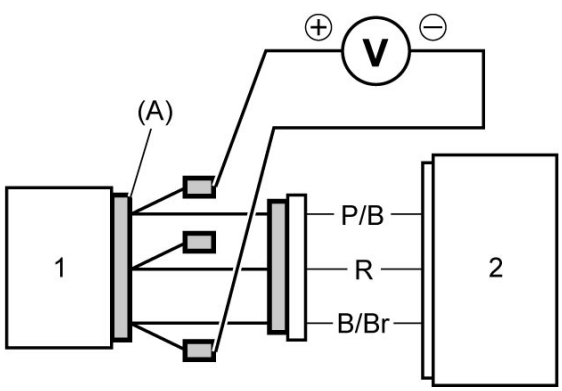

1.	TP sensor	2.	ECM

7) After finishing the TP sensor inspection, remove the special tool and install the removed parts.

TP Sensor Removal and Installation

Removal

1) Lift and support the fuel tank. ☞
2) Disconnect the TP sensor coupler (1) and STP sensor coupler (2).
3) Prior to disassembly, mark the sensor's original position with a paint or scribe for accurate reinstallation.
4) Remove the TP sensor (3) with the special tool.

Special Tool
09930–11950

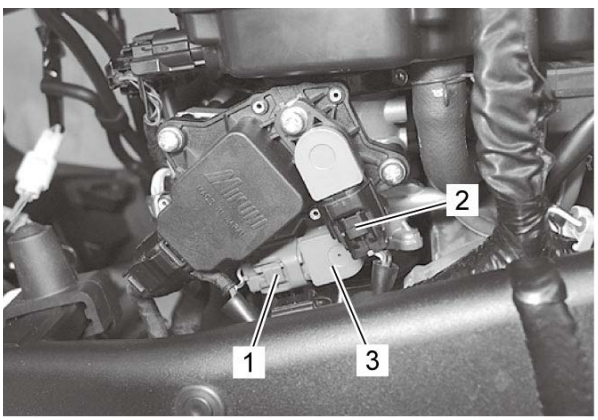

Installation

Install the TP sensor in the reverse order of removal. Pay attention to the following points:

- Apply a thin coat of engine oil to the new O-ring (1).
- With the throttle valve fully closed, install the TP sensor (2) aligning the throttle shaft end (3) with the groove (4) of the TP sensor.

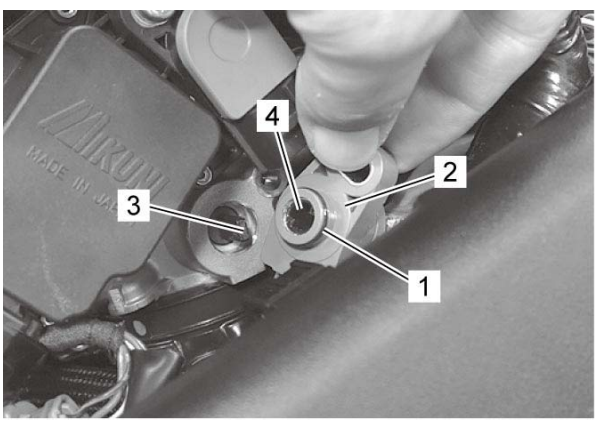

- Tighten the TP sensor mounting screw (1) to the specified torque.

Special Tool

09930–11950

Tightening torque

TP sensor mounting screw (a): 3.5 N·m (0.36 kgf-m, 2.60 lbf-ft)

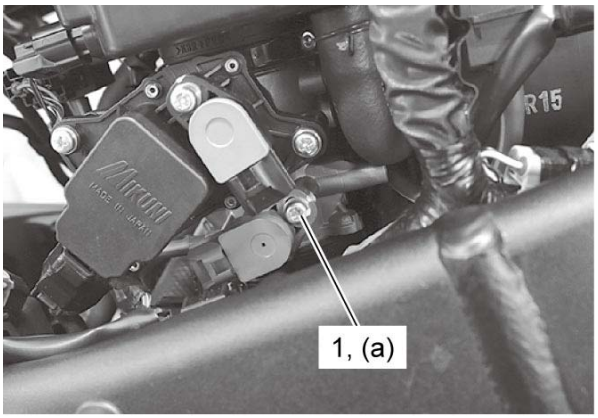

- Check the throttle valve operating smoothly.
- Adjust the position of TP sensor. ☞
- Reset the TP fully closed learned value. ☞

Tightening Torque Specifications

Fastening part	Tightening torque			Note
	N·m	kgf-m	lbf-ft	
ISC valve mounting screw	2	0.20	1.50	☞
IAT sensor screw	1.3	0.13	0.95	☞
ECT sensor	18	1.8	13.5	☞
TP sensor mounting screw	3.5	0.36	2.60	☞ ☞
HO2 sensor	25	2.5	18.5	☞
CKP sensor screw	4.5	0.46	3.35	☞
CKP sensor lead wire clamp screw	4.5	0.46	3.35	☞
Cam chain tensioner bolt	23	2.3	17.0	☞
STP sensor mounting screw	3.5	0.36	2.60	☞ ☞

Reference:
For the tightening torques of fasteners not specified in this page, refer to:
Fasteners Information

Recommended Service Material

Material	SUZUKI recommended product or Specification		Note
Sealant	SUZUKI BOND 1207B	P/No.: 99000–31140	☞
Thread lock cement	THREAD LOCK CEMENT 1322D	P/No.: 99000–32150	☞

Special Tool

09900–28631 TP Sensor test lead ☞☞☞☞	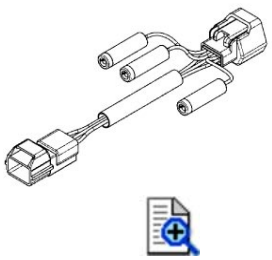	09917–47011 Vacuum pump gauge set ☞☞	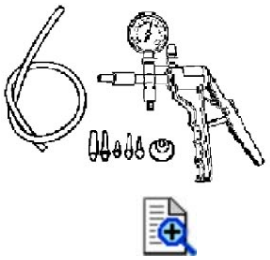
09930–11950 Torx® wrench (T25H) ☞☞☞☞☞☞	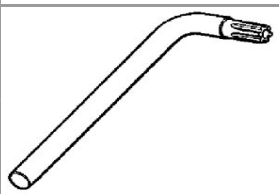	09930–82720 Mode selection switch ☞	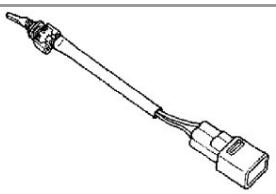

Torx® is the registered trademark of Camcar Division of Textron inc. U.S.A.

Precautions for Engine Cooling System

Refer to ***General Precautions*** and ***Precautions for Electrical Circuit Service***.

⚠WARNING:

- **You can be injured by boiling fluid or steam if you open the radiator cap when the engine is hot. After the engine cools, wrap a thick cloth around cap and carefully remove the cap by turning it a quarter turn to allow pressure to escape and then turn the cap all the way off.**
- **The engine must be cool before servicing the cooling system.**
- **Coolant is harmful:**
  - **— If it comes in contact with skin or eyes, flush with water.**
  - **— If swallowed accidentally, do not induce vomiting and call physician immediately.**
  - **— Keep it away from children.**

Engine Cooling Symptom Diagnosis

Condition	Possible Cause	Action
Engine overheats	Not enough engine coolant.	*Add engine coolant.* ☞
	Radiator core clogged with dirt or scale.	*Clean.* ☞
	Faulty cooling fan.	*Repair or replace.* ☞
	Defective cooling fan relay, or open-or-short circuited.	*Repair or replace.* ☞
	Clogged water passage.	*Clean.*
	Air trapped in the cooling circuit.	*Bleed air.* ☞
	Defective water pump.	*Replace.* ☞
	Use of incorrect engine coolant.	*Replace.* ☞
	Defective thermostat.	*Replace.* ☞
	Defective ECT sensor.	*Replace.* ☞
	Defective ECM.	*Replace.* ☞
	Damaged ISC valve.	*Replace.* ☞
	Incorrect ISC learning.	*Reset learned value.* ☞
Engine over cools	Defective cooling fan relay, or open-or-short circuited.	*Repair or replace.* ☞
	Extremely cold weather.	*Put on radiator cover.*
	Defective thermostat.	*Replace.* ☞
	Defective ECT sensor.	*Replace.* ☞
	Defective ECM.	*Replace.* ☞

Water Hose Routing Diagram

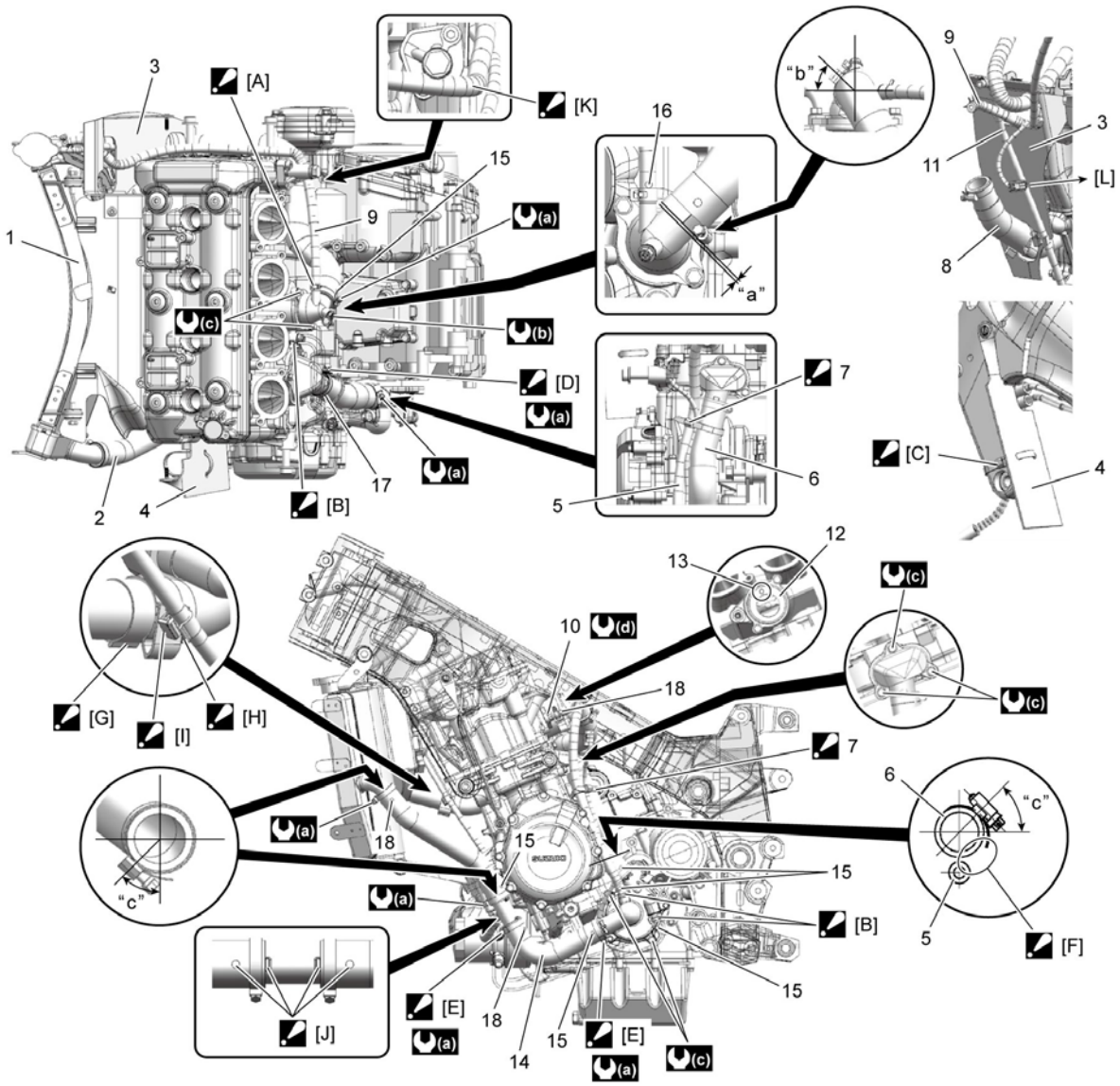

[A]:	Clamp end should face upward.	2.	Radiator outlet hose.	15.	White mark
[B]:	Clamp end should face left side.	3.	Right radiator heat shield (GSX-S1000F/FA)	16.	Green mark
[C]:	Clamp end should face forward.	4.	Left radiator heat shield (GSX-S1000F/FA)	17.	Red mark
[D]:	Screw head should face backward.	5.	Water bypass hose	18.	Yellow mark
[E]:	Screw head should face left side.	6.	Cylinder inlet hose	"a":	2 – 6 mm (0.08 – 0.2 in)

[F]:	Do not contact the tip of clamp and water bypass hose.	7.	Clamp : Clamp the water bypass hose, cylinder inlet hose and GP switch lead wire at upper than the protector of the cylinder inlet hose.	"b":	30 – 60°
[G]:	Open end of the clamp should face downward.	8.	Radiator inlet hose	"c":	15 – 45°
[H]:	Open end of the clamp should face forward.	9.	Air bleed hose	(a):	1.5 N·m (0.15 kgf-m, 1.10 lbf-ft)
[I]:	Align the clamp position and marking.	10.	Bypass union	(b):	6 N·m (0.61 kgf-m, 4.45 lbf-ft)
[J]:	Align the hose stopper and marking.	11.	Reservoir tank inlet hose	(c):	10 N·m (1.0 kgf-m, 7.5 lbf-ft)
[K]:	Pass the air bleed hose to the under of the cam chain tension adjuster.	12.	Thermostat	(d):	12 N·m (1.2 kgf-m, 9.0 lbf-ft)
[L]:	To radiator fan	13.	Jiggle valve		
1.	Radiator	14.	Radiator outlet hose No. 2		

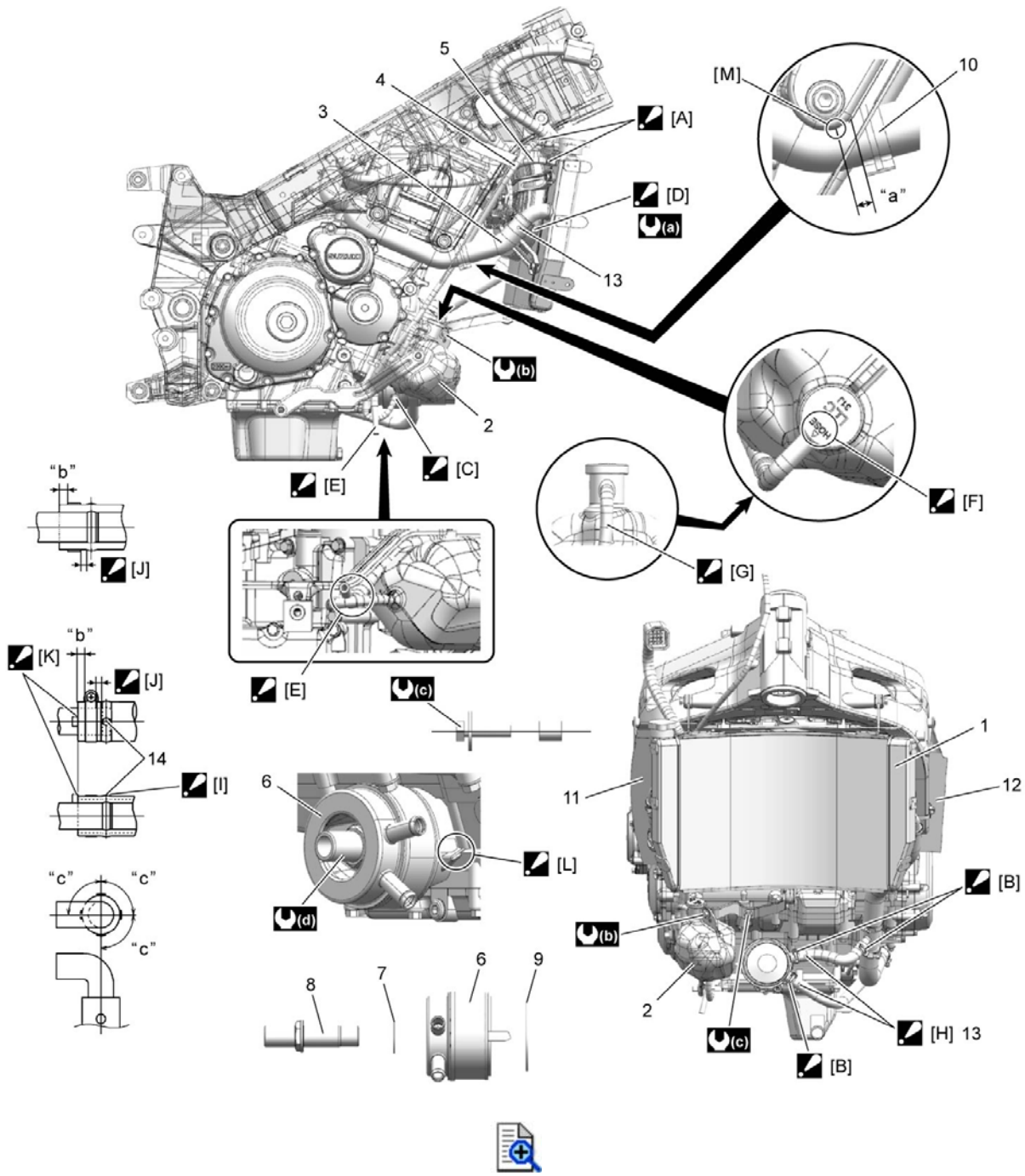

[A]:	Clamp end should face right side.	[M]:	Datum point (Contact position of the hose and frame)	11.	Right radiator heat shield (GSX-S1000F/FA)
[B]:	Clamp end should face forward.	1.	Radiator	12.	Left radiator heat shield (GSX-S1000F/FA)
[C]:	Clamp end should face left side.	2.	Reservoir tank	13.	Yellow mark
[D]:	Screw head should face right side.	3.	Radiator inlet hose	14.	Match mark

[E]:	Pass the reservoir tank overflow hose to the outside of the reservoir tank inlet hose.	4.	Reservoir tank inlet hose	“a”:	0 – 10 mm (0 – 0.39 in)
[F]:	Align the “△” mark of the reservoir tank cap with the reservoir tank overflow hose.	5.	Air bleed hose	“b”:	2 – 8 mm (0.08 – 0.3 in)
[G]:	Pass the reservoir tank overflow hose to downward.	6.	Oil cooler	“c”:	90°
[H]:	Face the marking to forward.	7.	Washer	(a):	1.5 N·m (0.15 kgf-m, 1.10 lbf-ft)
[I]:	The match mark position on the bulge.	8.	Oil cooler union bolt	(b):	6 N·m (0.61 kgf-m, 4.45 lbf-ft)
[J]:	Keep clearance.	9.	O-ring	(c):	10 N·m (1.0 kgf-m, 7.5 lbf-ft)
[K]:	Insert the hose to the stopper.	10.	Reservoir tank clamp	(d):	70 N·m (7.1 kgf-m, 52.0 lbf-ft)
[L]:	Contact the stopper to the crankcase.				

Cooling Circuit Diagram

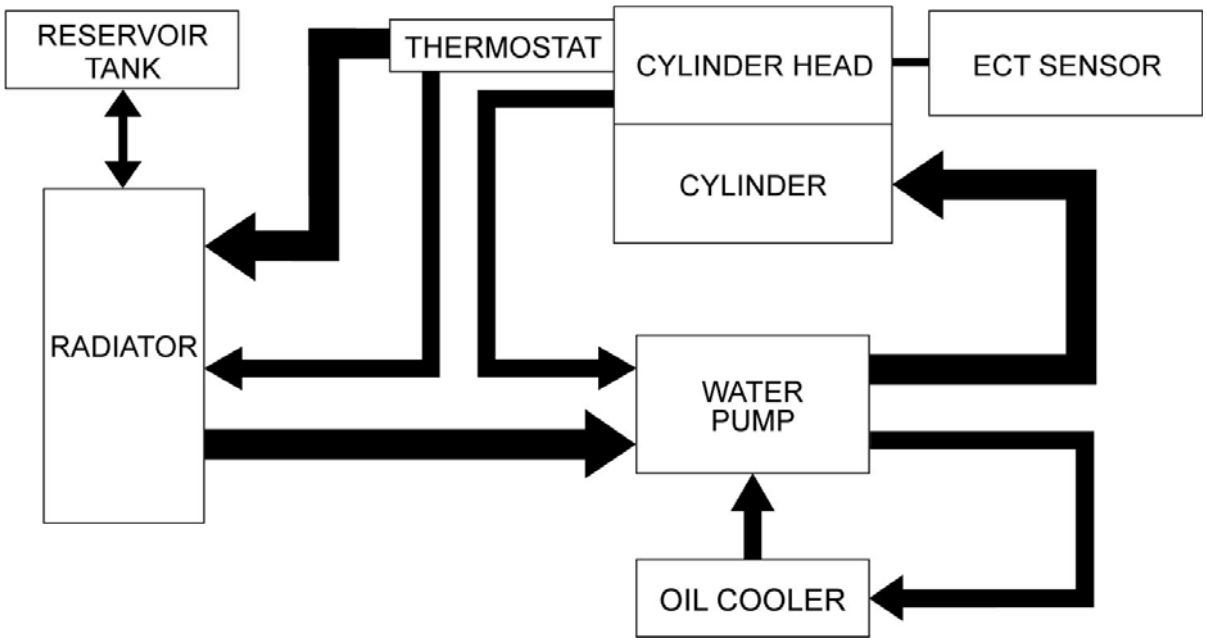

Air Bleeding of Engine Cooling System

1) Support the motorcycle upright.
2) Lift and support the fuel tank. ☞
3) Pour engine coolant up to the radiator inlet.

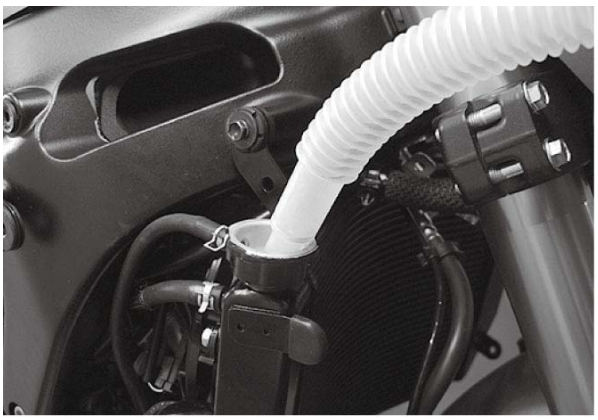

4) Slowly swing the motorcycle, right and left, to bleed the air trapped in the cooling circuit.
5) Add engine coolant up to the radiator inlet.
6) Start up the engine and bleed air from the radiator inlet completely.
7) Add engine coolant up to the radiator inlet.
8) Repeat the 5), 6) procedures until no air bleeds from the radiator inlet.
9) Loosen the thermostat cover air bolt (1) and check the engine coolant flows out.

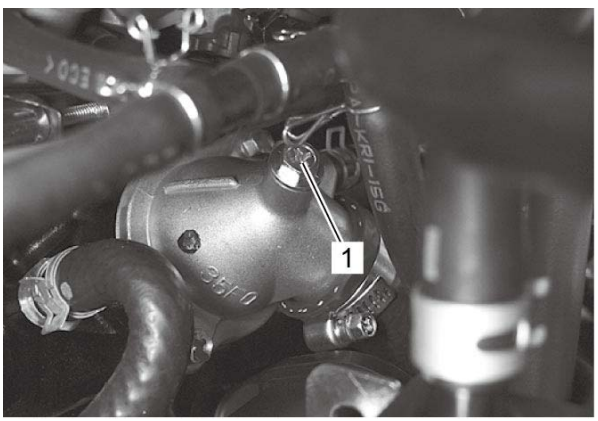

10) Tighten the thermostat cover air bolt to the specified torque.

Tightening torque

Thermostat cover air bolt: 6 N·m (0.61 kgf-m, 4.45 lbf-ft)

11) Close the radiator cap securely.
12) After warming up and cooling down the engine several times, add the engine coolant up to the full level of the reservoir.

13) Install the removed parts.

Cooling Fan On-Vehicle Inspection

1) Remove the following parts.
- Right frame body cover (GSX-S1000/A): ☞
- Right side cowling assembly (GSX-S1000F/FA): ☞

2) Disconnect the cooling fan motor coupler (1).

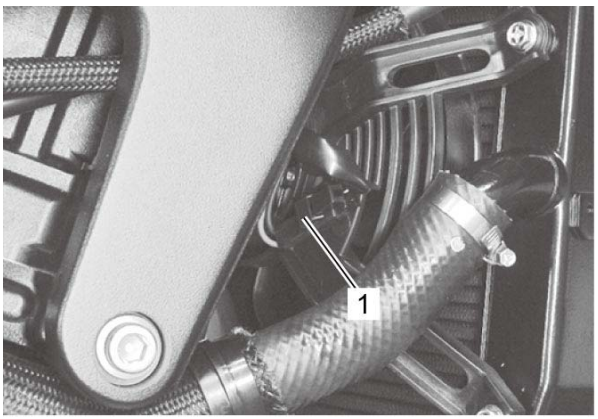

3) Test the cooling fan motor (3) for load current with an ammeter (2) connected as shown in the figure.
If the fan motor does not turn, replace the cooling fan assembly with a new one. ☞

NOTE:
- **When making this test, it is not necessary to remove the cooling fan.**
- **Make sure that the battery (1) has a capacity enough to supply the motor with 12 V.**
- **With the motor running at full speed, the ammeter should indicate an amperage not higher than 5.4 A.**

Cooling fan operating temperature

(OFF→ON) [Standard]: Approx. 105 °C (221 °F)
(ON→OFF) [Standard]: Approx. 100 °C (212 °F)

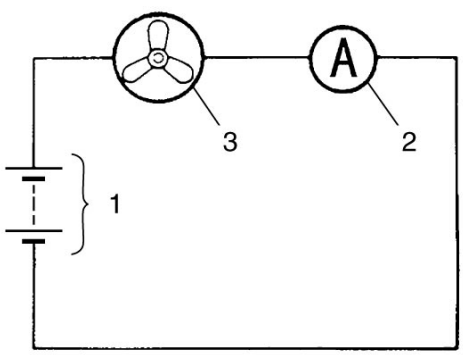

4) After finishing the cooling fan inspection, install the removed parts.

Cooling Fan Relay Inspection

1) Remove the front seat. ☞

2) Disconnect the battery (–) lead wire (1) and remove the cooling fan relay (2).

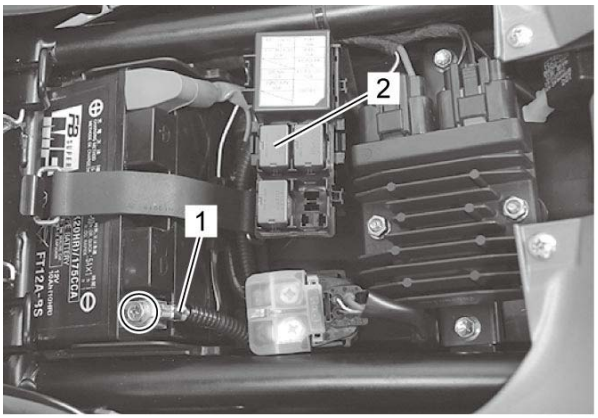

3) First check the insulation between (3) and (4) terminals with a circuit tester. Then apply 12 V to (1) and (2) terminals, (+) to (1) and (–) to (2), and check the continuity between (3) and (4). If there is no continuity, replace it with a new one.

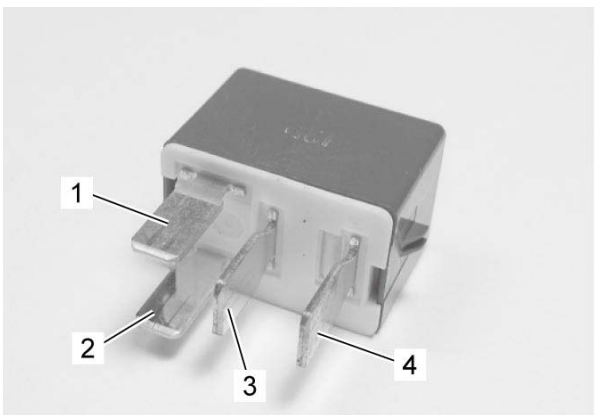

4) Install the removed parts.

Engine Coolant Level Inspection

1) Keep the motorcycle upright.

2) Remove the following parts.
- Right under cowling assembly (GSX-S1000/A): ☞
- Right side cowling assembly (GSX-S1000F/FA): ☞

3) Check the engine coolant level by observing the full (1) and lower (2) lines on the engine coolant reservoir tank. If the level is below the lower line, add engine coolant to the bottom of full line from the engine coolant reservoir tank filler.

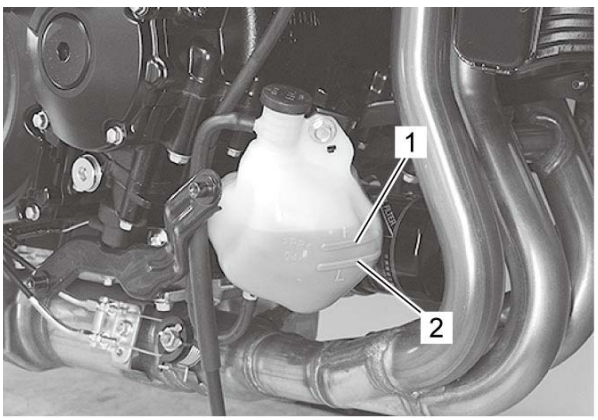

4) Install the reservoir tank cap by aligning the match mark (1) and reservoir tank overflow hose (2).

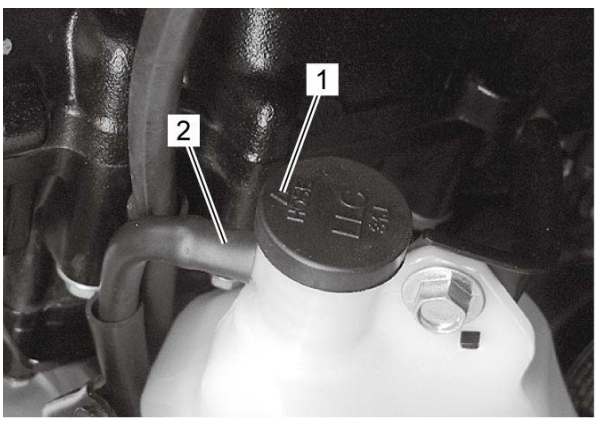

Engine Coolant Replacement

Refer to ***Engine Coolant Description***.

1) Remove the following parts.
- Right frame body cover (GSX-S1000/A): ☞
- Left under cowling (GSX-S1000/A): ☞
- Side cowling assemblies (GSX-S1000F/FA): ☞

2) Remove the radiator cap (1).

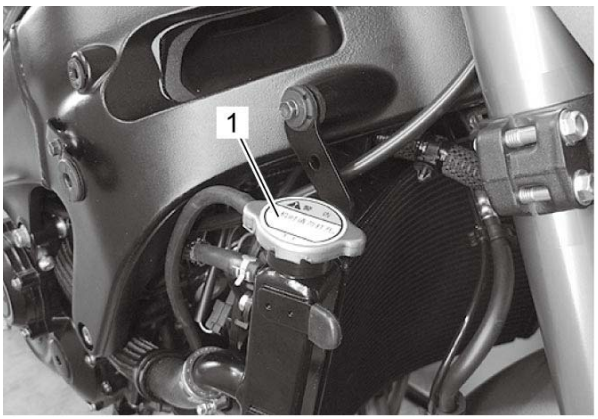

3) Disconnect the radiator outlet hose No. 2 (1) and drain engine coolant.

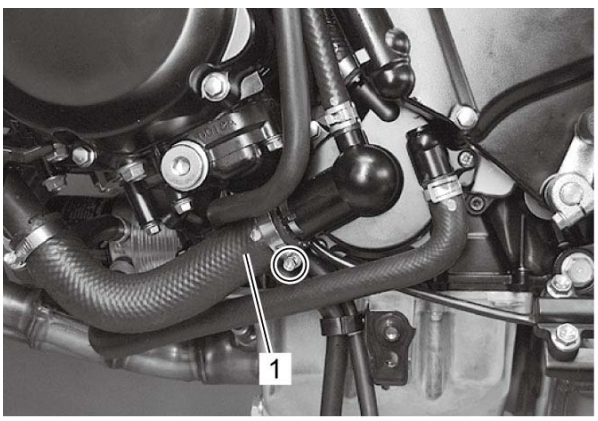

4) Flush the radiator with fresh water if necessary.

5) Connect the radiator outlet hose No. 2. ☞

6) Pour the specified engine coolant up to the radiator inlet.

Engine coolant

Engine side [Standard]: Approx. 2500 ml (5.28 US qt, 4.40 Imp, qt)
Reservoir tank side [Standard]: Approx. 250 ml (0.53 US qt, 0.44 Imp, qt)

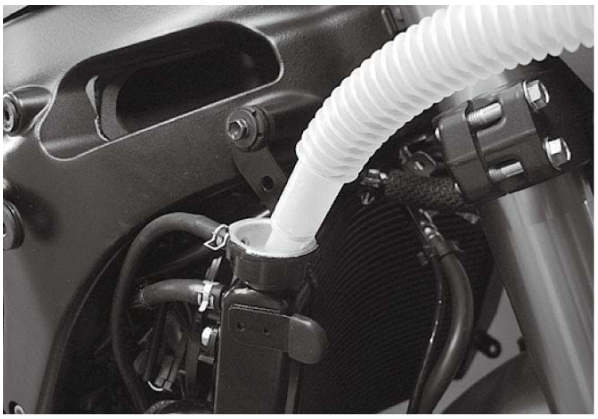

7) Bleed air from the cooling circuit. ☞

8) Install the removed parts.

Engine Cooling System Inspection

1) Remove the following parts.
- Right frame body cover (GSX-S1000/A): ☞
- Right side cowling assembly (GSX-S1000F/FA): ☞

2) Remove the radiator cap (1) and connect the special tool to the filler.

3) Pressurize the cooling system with approx. 135 kPa (1.4 kgf/cm^2, 20 psi) of pressure, and then check if it holds the pressure for 10 seconds.

NOTICE:
Do not exceed the radiator cap release pressure, or the radiator cap and subsequently the radiator, can be damaged.

Special Tool

(A): 09918–78211
(B): 09918–78220

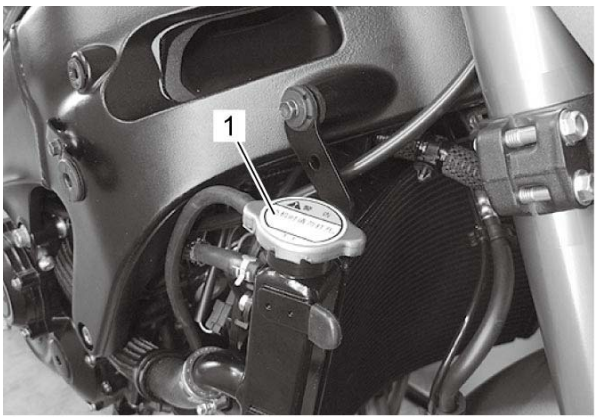

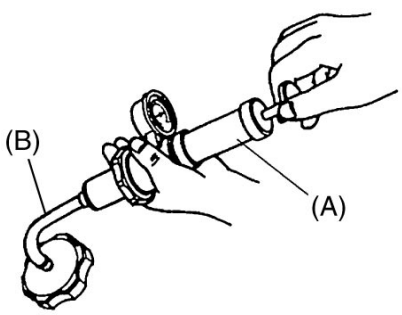

4) Install the removed parts.

Radiator / Cooling Fan Motor Removal and Installation

Removal

1) Remove the following parts.
- Frame body covers (GSX-S1000/A): ☞
- Side cowling assemblies (GSX-S1000F/FA): ☞

2) Drain engine coolant. ☞

3) Disconnect the radiator outlet hose (1).

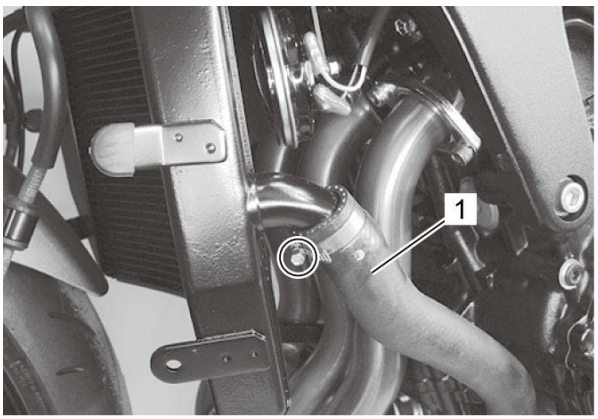

4) Disconnect the reservoir tank inlet hose (1), air bleed hose (2) and radiator inlet hose (3).

5) Disconnect the cooling fan motor coupler (4).

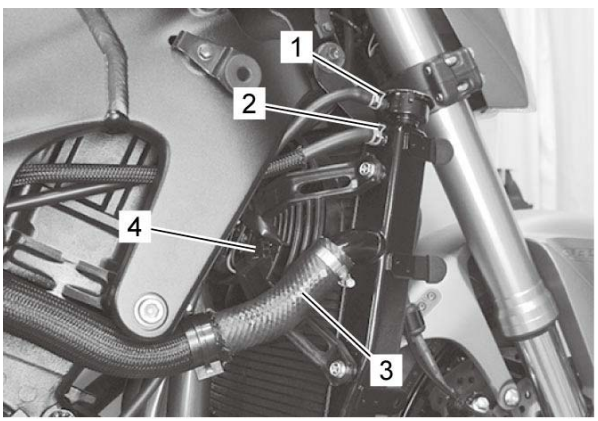

6) Remove the bolts (1).

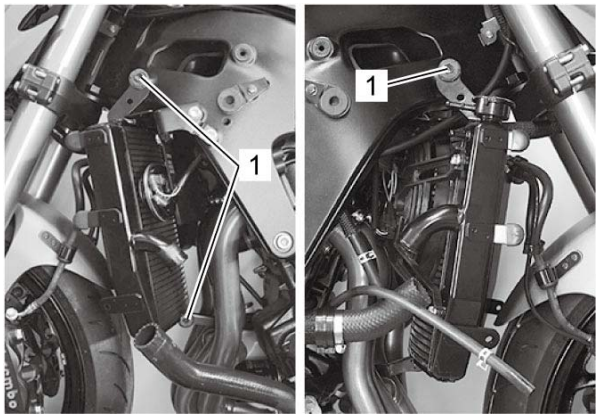

7) Remove the radiator (1).

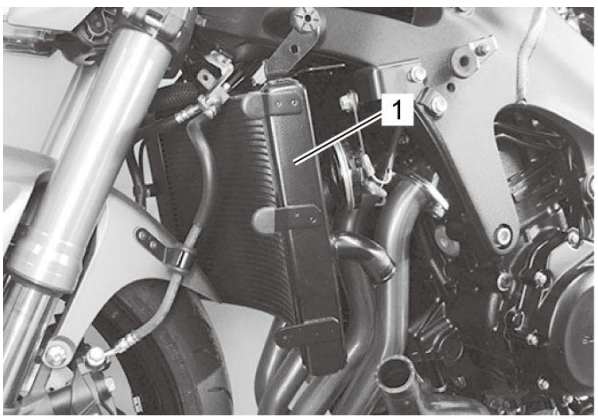

8) Remove the cooling fan motor (1).

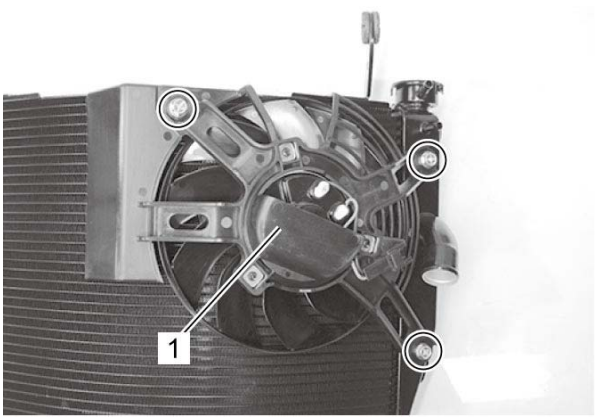

Installation

Install the radiator in the reverse order of removal. Pay attention to the following points:

- Tighten the cooling fan assembly mounting bolts (1) to the specified torque.

Tightening torque

Cooling fan assembly mounting bolt (a): 8.5 N·m (0.87 kgf-m, 6.30 lbf-ft)

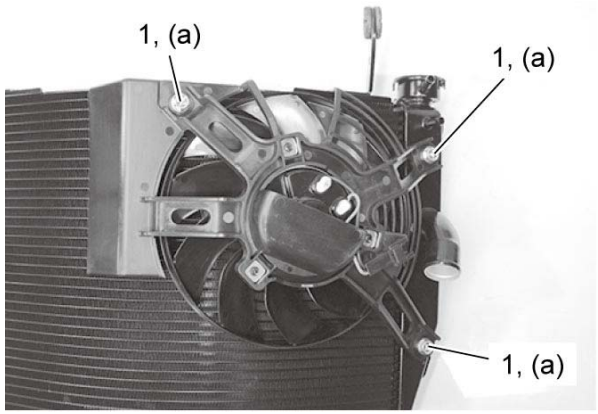

- Tighten the radiator mounting bolts (1) to the specified torque.

Tightening torque

Radiator mounting bolt (a): 10 N·m (1.0 kgf-m, 7.5 lbf-ft)

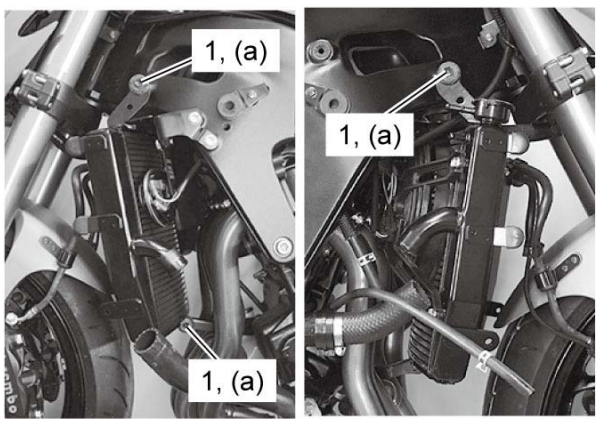

- Tighten the water hose clamp screws (1) to the specified torque.

Tightening torque

Water hose clamp screw (a): 1.5 N·m (0.15 kgf-m, 1.10 lbf-ft)

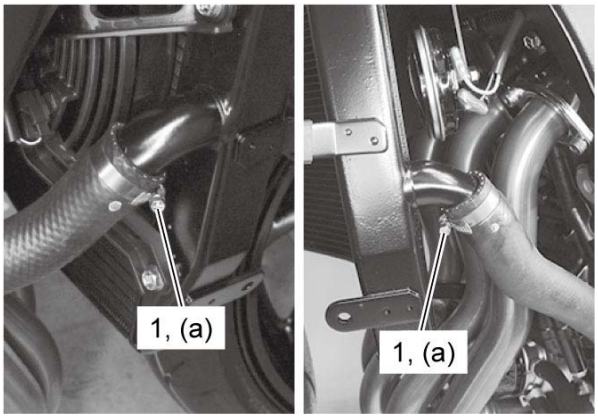

- Connect the radiator hoses securely. ☞
- Pour engine coolant. ☞

Radiator Cap Inspection

Refer to ***Engine Cooling System Inspection***.

1) Remove the following parts.
- Right frame body cover (GSX-S1000/A): ☞
- Right side cowling assembly (GSX-S1000F/FA): ☞

2) Remove the radiator cap (1).

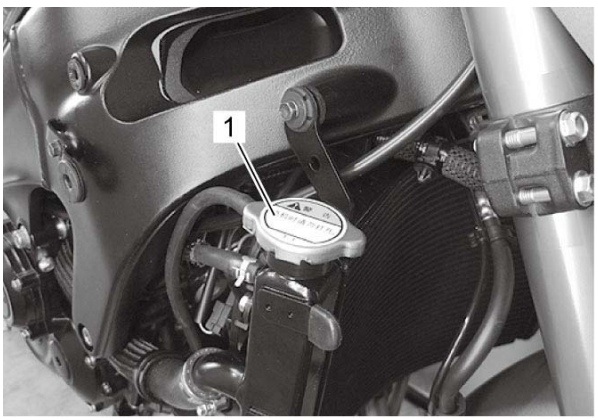

3) Attach the radiator cap (1) to the special tool as shown in the figure.

4) Slowly apply pressure to the radiator cap.
If the radiator cap does not hold the pressure for at least 10 seconds, replace it with a new one.

Special Tool

(A): 09918–78211
(B): 09918–78220

Radiator cap valve opening pressure

[Standard]: 107.9 – 137.3 kPa (1.1 – 1.4 kgf/cm^2, 15.7 – 19.9 psi)

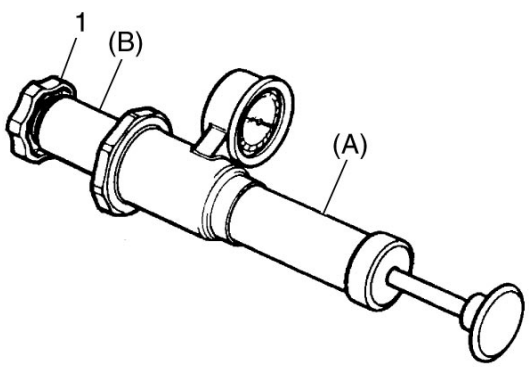

Radiator Hose Inspection

1) Remove the left under cowling (GSX-S1000/A). ☞

2) Lift and support the fuel tank. ☞

3) Check the radiator hoses for crack, damage or engine coolant leakage. If any defect is found, replace the radiator hose with a new one.

4) Any leakage from the connecting section (1) should be corrected by proper tightening. ☞

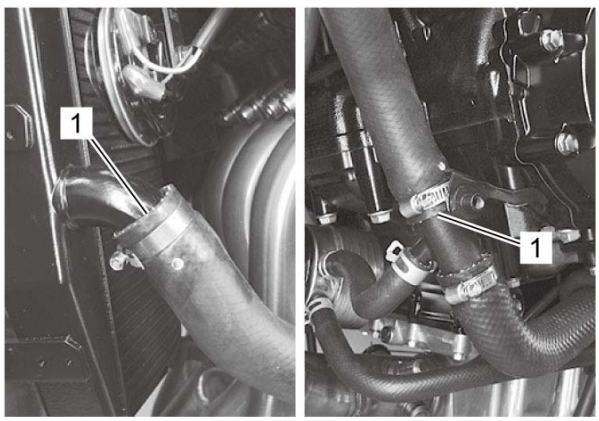

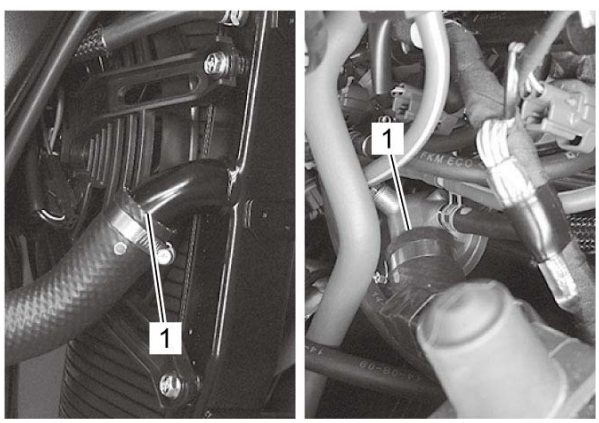

Radiator Inspection and Cleaning

Inspection

Reference: Radiator / Cooling Fan Motor Removal and Installation

1) Remove the following parts.
- Frame body covers (GSX-S1000/A): ☞
- Side cowling assemblies (GSX-S1000F/FA): ☞

2) Inspect the radiator for coolant leaks. If any defects are found, replace the radiator with a new one.

3) If the fins are bent or dented, repair them by carefully straightening them with the blade of a small screwdriver.

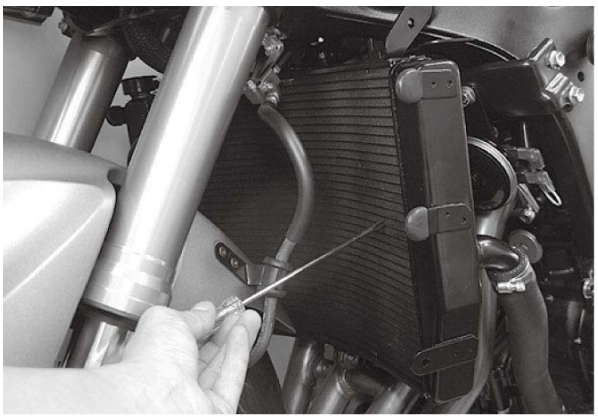

4) Install the removed parts.

Cleaning

1) Remove the following parts.
- Frame body covers (GSX-S1000/A): ☞
- Side cowling assemblies (GSX-S1000F/FA): ☞

2) Blow out any foreign matter that is stuck in the radiator fins using compressed air.

NOTICE:
- **Do not bend the fins when using compressed air.**
- **Apply compressed air from the engine side. If compressed air is applied from the other side, dirt will be forced into the pores of radiator.**

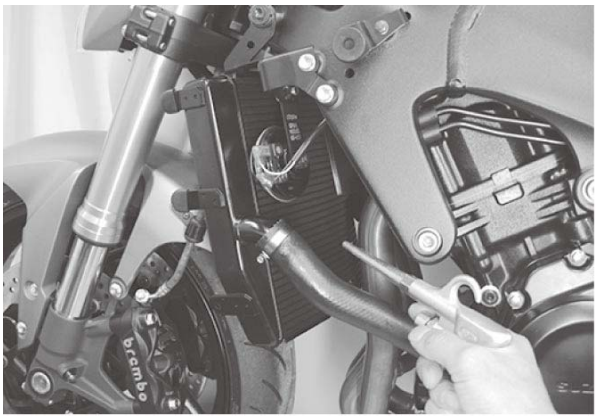
brembo

Radiator Reservoir Tank Inspection

1) Remove the following parts.
- Right under cowling (GSX-S1000/A): ☞
- Right side cowling assembly (GSX-S1000F/FA): ☞

2) Inspect the radiator reservoir tank (1) coolant leaks. If any defects are found, replace the radiator reservoir tank with a new one.

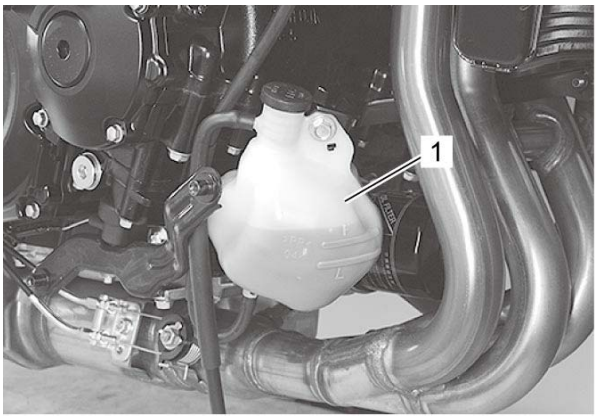

3) Install the removed parts.

Radiator Reservoir Tank Removal and Installation

Removal

1) Remove the following parts.
- Right under cowling (GSX-S1000/A): ☞
- Right side cowling assembly (GSX-S1000F/FA): ☞

2) Remove the reservoir tank bolt (1) and reservoir tank (2).

3) Disconnect the reservoir tank inlet hose (3) and drain engine coolant.

4) Disconnect the reservoir tank overflow hose (4).

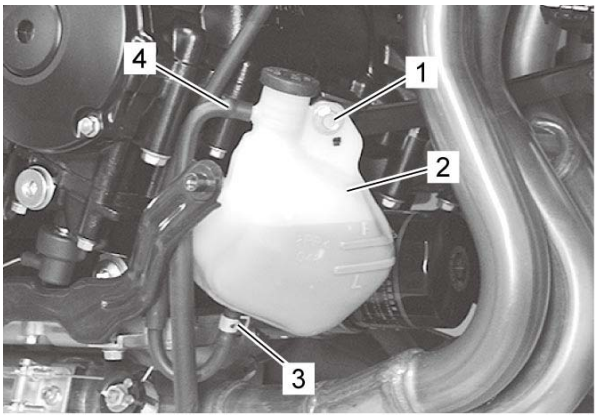

Installation

Install radiator reservoir tank in the reverse order of removal. Pay attention to the following points:
- Apply thread lock to the reservoir tank mounting bolt (1) and then tighten the bolt (1) to the specified torque.

"A": Thread lock cement 99000–32150 (THREAD LOCK CEMENT 1322D)

Tightening torque

Reservoir tank mounting bolt (a): 6 N·m (0.61 kgf-m, 4.45 lbf-ft)

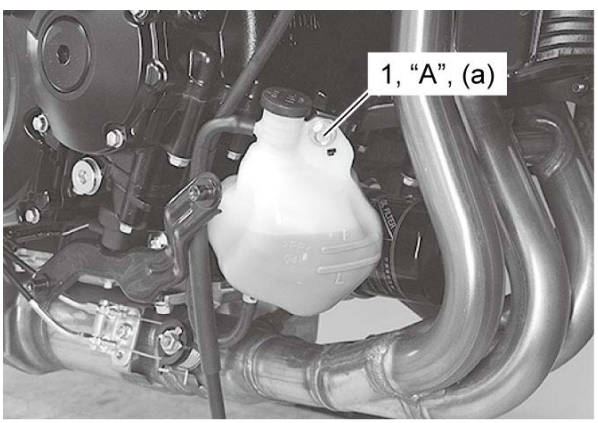

- Fill the reservoir tank to the upper level (1). ☞

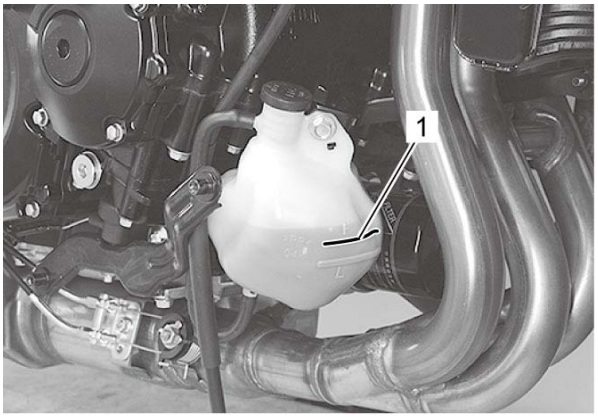

Thermostat Inspection

Reference: Thermostat Removal and Installation

1) Inspect the thermostat pellet for signs of cracking.

2) Test the thermostat at the bench for control action.

NOTE:
- **Do not contact the thermostat (1) and the column thermometer (2) with a pan.**
- **As the thermostat operating response to water temperature change is gradual, do not raise water temperature too quickly.**
- **The thermostat with its valve open even slightly under normal temperature must be replaced.**

3) Immerse the thermostat (1) in the water contained in a beaker and note that the immersed thermostat is in suspension.

4) Heat the water by placing the beaker on a heater (3) and observe the rising temperature on a thermometer (2).

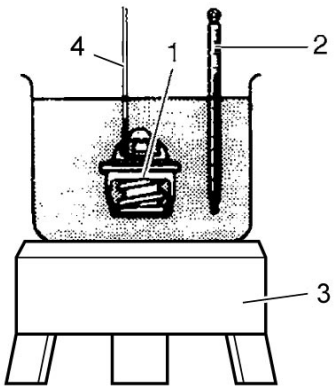

4.	String

5) Read the thermometer just when opening the thermostat. If this reading, which is the temperature level at which the thermostat valve begins to open, is out of the standard value, replace the thermostat with a new one.

Thermostat valve opening temperature

[Standard]: Approx. 82 °C (179.6 °F)

6) Keep on heating the water to raise its temperature.

7) Just when the water temperature reaches specified value, the thermostat valve should have been lifted by at least 8 mm (0.3 in) “a”. A thermostat failing to satisfy either of the two requirements (start-to-open temperature and valve lift) must be replaced.

Thermostat valve lift

At 95 °C (203 °F) [Standard]: 8 mm (0.3 in) or more

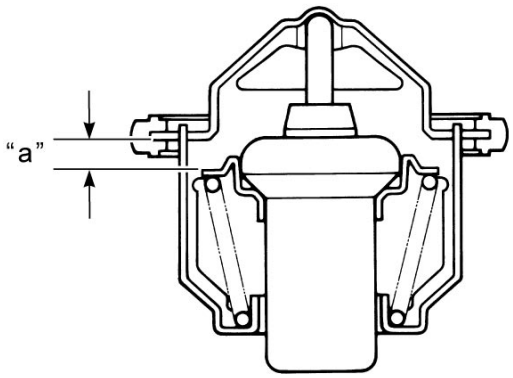
“a”

Thermostat Removal and Installation

Removal

1) Drain engine coolant. ☞

2) Lift and support the fuel tank. ☞

3) Place a rag under the thermostat connector cover (1) and then remove the thermostat connector cover (1).

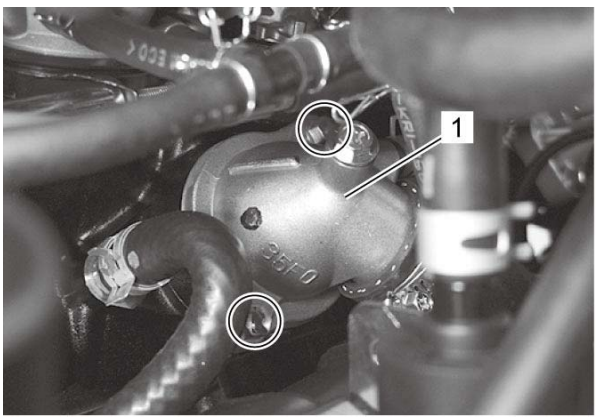

4) Remove the thermostat (1).

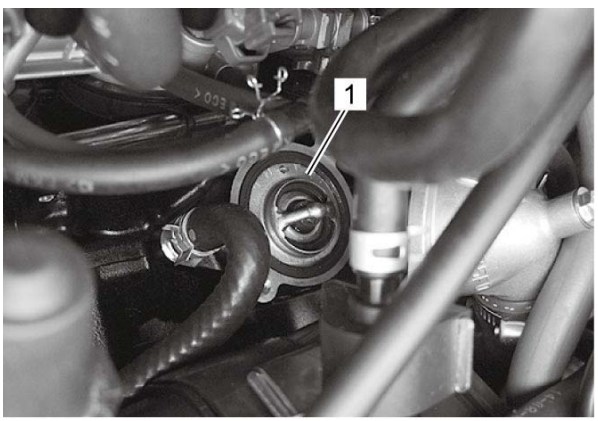

Installation

Install the thermostat in the reverse order of removal. Pay attention to the following points:

- Install the thermostat (1).

NOTE:
The jiggle valve (2) of the thermostat faces upside.

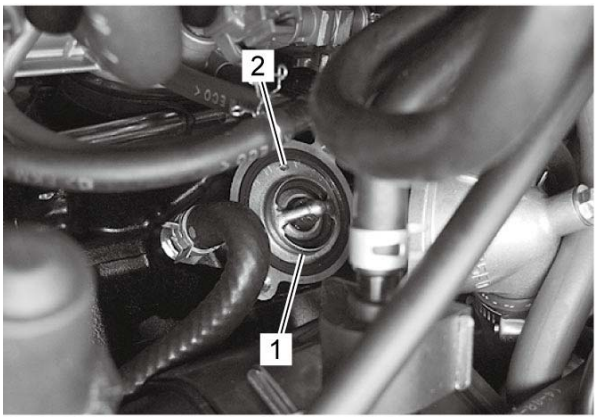

- Install the thermostat connector cover (1) and tighten the bolts (2) to the specified torque.

  Tightening torque

  Thermostat connector cover bolt (a): 10 N·m (1.0 kgf-m, 7.5 lbf-ft)

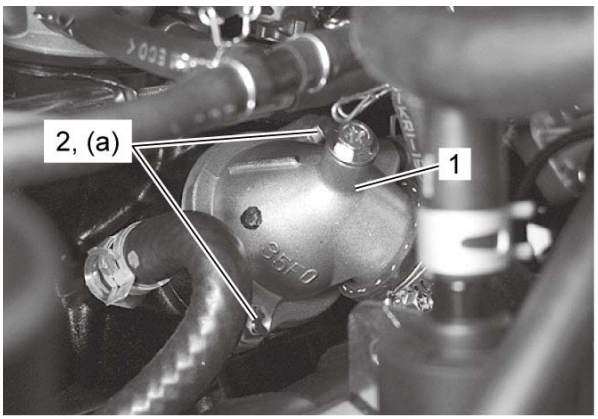

- Pour engine coolant and bleed air from the cooling system.
  Refer to ***Engine Coolant Replacement*** and ***Air Bleeding of Engine Cooling System***.

Water Hose Inspection

1) Lift and support the fuel tank. ☞
2) Remove the under cowling (GSX-S1000/A). ☞
3) Remove the engine sprocket cover. Refer to ***Clutch Push Rod (Left) / Clutch Release Camshaft Removal and Installation***.
4) Check the water hoses for crack, damage or engine coolant leakage. If any defect is found, replace the radiator hose with a new one.
5) Any leakage from the connecting section (1) should be corrected by proper tightening. ☞

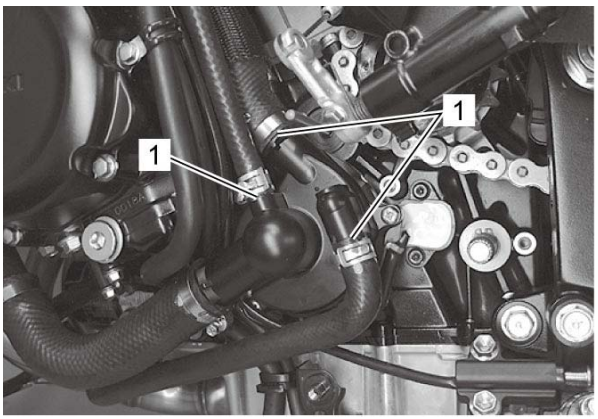

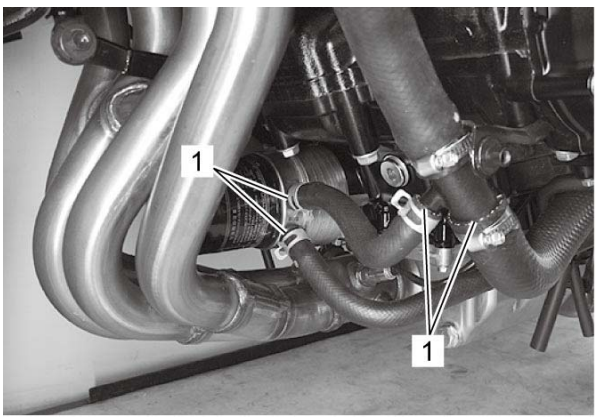

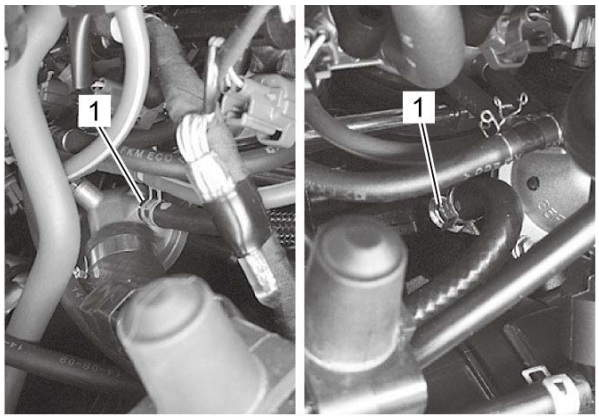

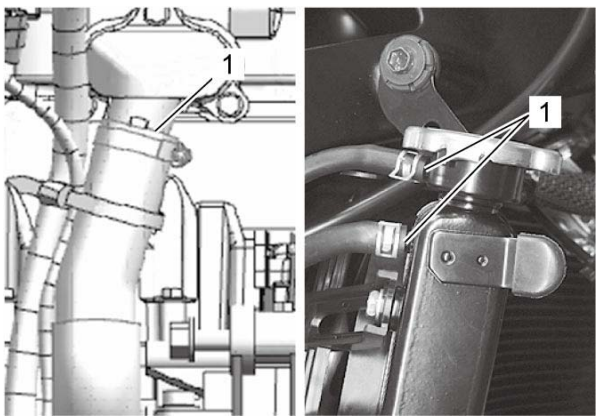

6) After finishing the water hose inspection, install the removed parts.

Water Hose Removal and Installation

Reference: Water Hose Routing Diagram

Removal

1) Drain engine coolant. ☞

2) Lift and support the fuel tank. ☞

3) Remove the under cowling (GSX-S1000/A). ☞

4) Remove the engine sprocket cover. Refer to ***Clutch Push Rod (Left) / Clutch Release Camshaft Removal and Installation***.

5) Remove the water hose. ☞

Installation

Install the water hose in the reverse order of removal.

Water Pump Assembly Components

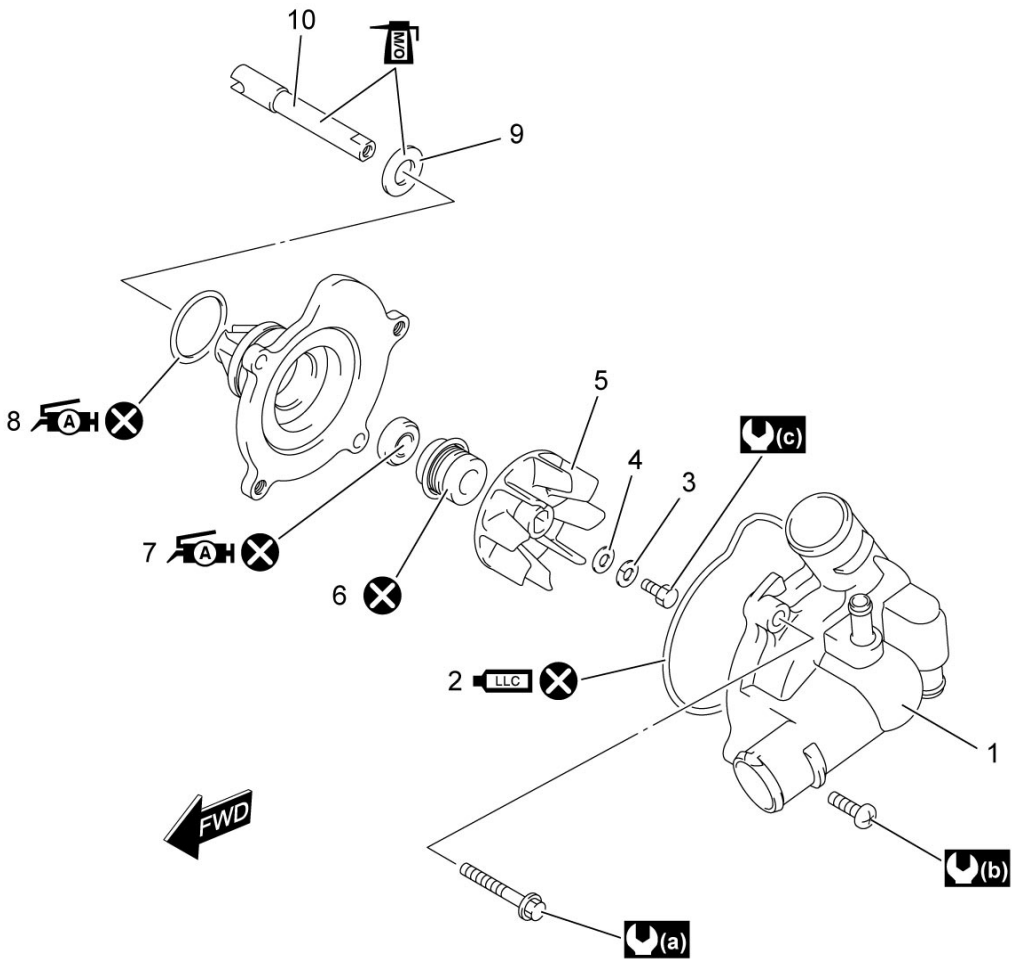

1.	Water pump case	7.	Oil seal	(c):	8 N·m (0.82 kgf-m, 5.90 lbf-ft)
2.	O-ring	8.	O-ring	A:	Apply grease.
3.	Washer	9.	Washer	MO:	Apply molybdenum oil solution.
4.	Seal washer	10.	Impeller shaft	LLC:	Apply engine coolant.
5.	Impeller	(a):	10 N·m (1.0 kgf-m, 7.5 lbf-ft)	:	Do not reuse.
6.	Mechanical seal	(b):	5.5 N·m (0.56 kgf-m, 4.05 lbf-ft)		

Water Pump Disassembly and Reassembly

Refer to ***Water Pump Removal and Installation***.

Disassembly

1) Remove the water pump case (1).

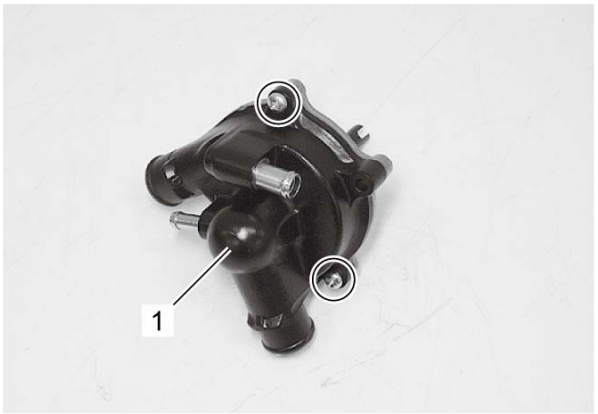

2) Remove the O-ring (1).



3) Remove the impeller securing bolt by holding the impeller (1) with a water pump pliers.

4) Remove the impeller (1).

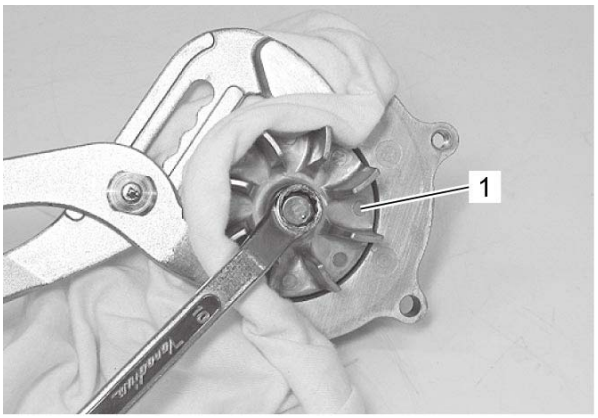

5) Remove the mechanical seal ring (1) and rubber seal (2).

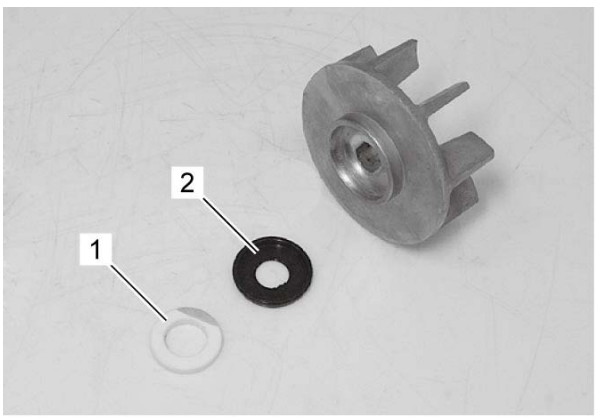

6) Remove the O-ring (1), impeller shaft (2) and washer (3).



7) Remove the mechanical seal using the special tool.

Special Tool

(A): 09921–20240

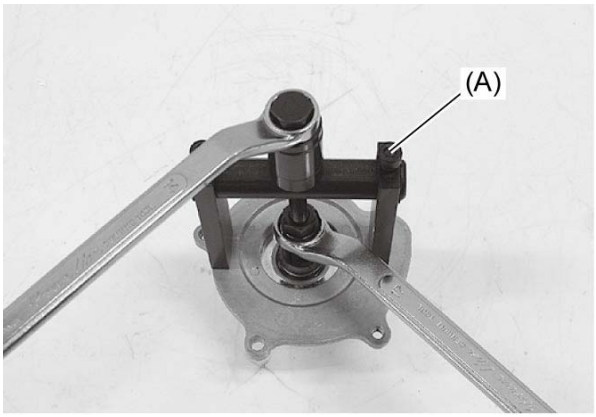

8) Remove the oil seal (1).

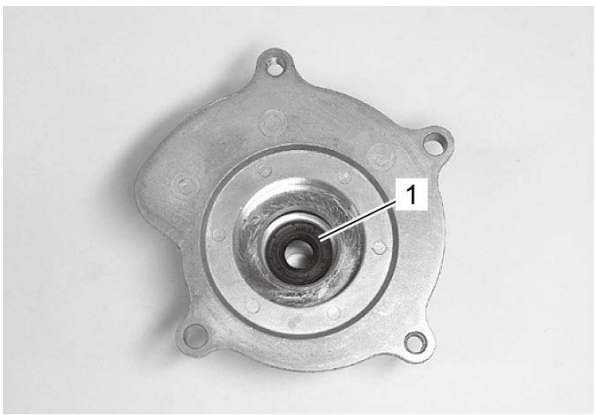

Reassembly

1) Install the new oil seal with the special tool.

Special Tool

(A): 09913–70210

NOTE:
Face the flat side “A” of the oil seal to the mechanical seal side.



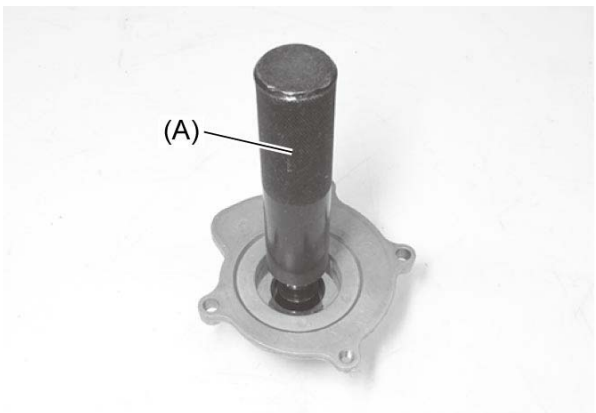

2) Apply grease to the oil seal lip.

"A": Grease 99000–25011 (SUZUKI SUPER GREASE A)

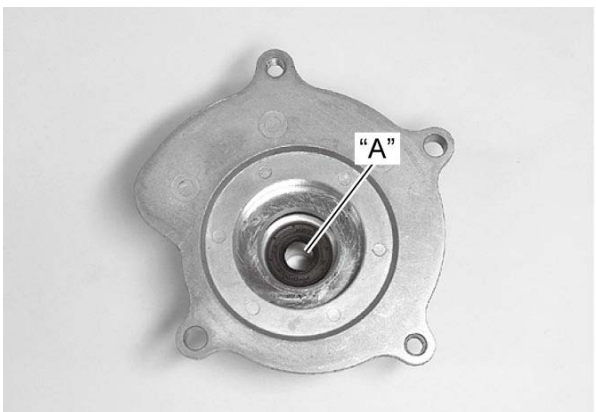

3) Install the new mechanical seal using a suitable size socket wrench.

NOTE:
On the new mechanical seal, the sealer has been applied.



4) Apply molybdenum oil solution to the impeller shaft (1) and washer (2).
"A": Assembly lubrication (Molybdenum oil solution)

5) Install the impeller shaft (1) and washer (2) to the water pump holder.

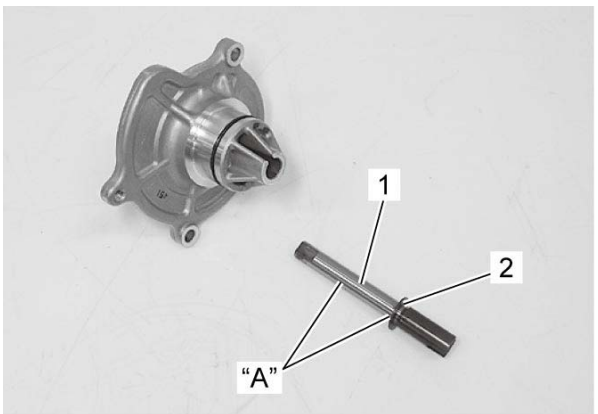

6) Install the rubber seal (1) into the impeller.

7) After wiping off the oily or greasy matter from the mechanical seal ring, install it into the impeller.

NOTE:
- **The paint marked side (2) of the mechanical seal ring faces the rubber seal (1).**
- **Make sure the mechanical seal ring is fit into the impeller.**

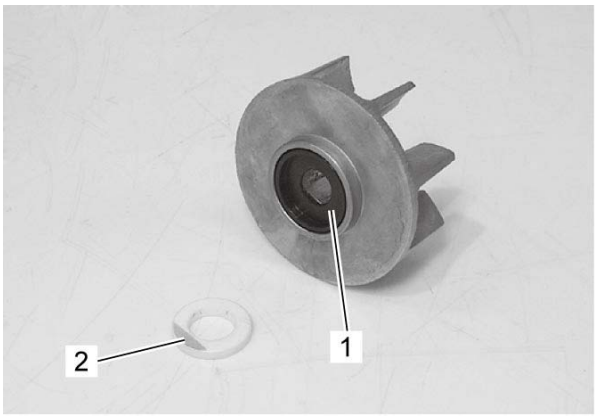

8) Install the washer (1) and seal washer (2) onto the impeller securing bolt.

NOTE:
The metal side (3) of seal washer and the curved side (4) of washer face the impeller securing bolt head.

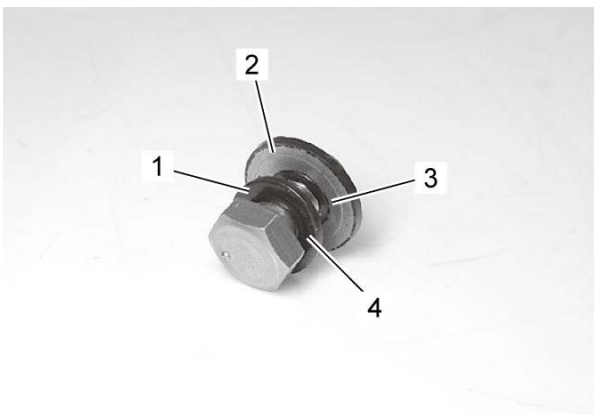

9) Install the impeller (1).

10) Hold the impeller with water pump pliers and tighten the impeller securing bolt to the specified torque.

Tightening torque

Impeller securing bolt (a): 8 N·m (0.82 kgf-m, 5.90 lbf-ft)

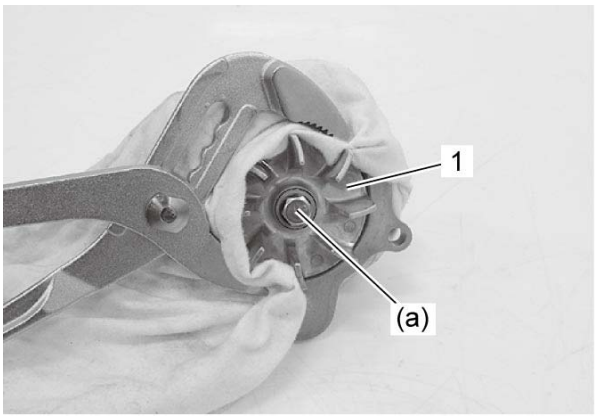

11) Install the new O-ring (1) to the water pump case (2) and apply engine coolant to it.

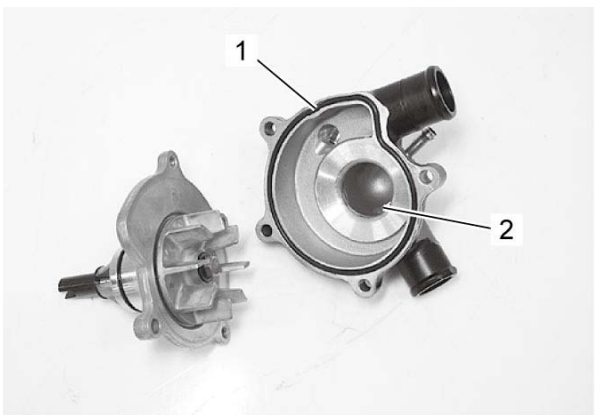

12) Tighten the screws (1) to the specified torque.

Tightening torque

Water pump case screw (a): 5.5 N·m (0.56 kgf-m, 4.05 lbf-ft)

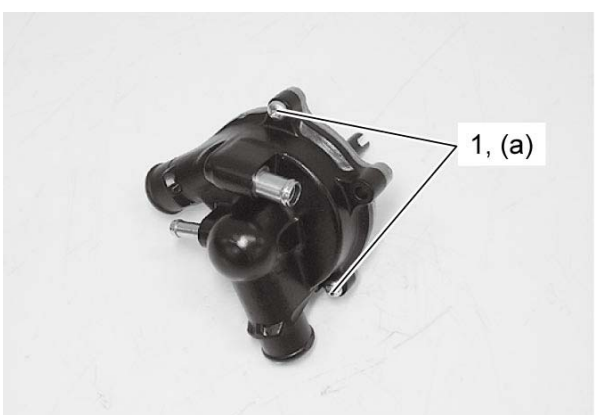

13) Pour engine coolant. ☞

14) Bleed air from the cooling system. ☞

Water Pump Related Parts Inspection

Refer to ***Water Pump Disassembly and Reassembly***.

Mechanical Seal

Visually inspect the mechanical seal (1) for damage, with particular attention given to the sealing face.
Replace the mechanical seal (1) that shows indications of leakage.

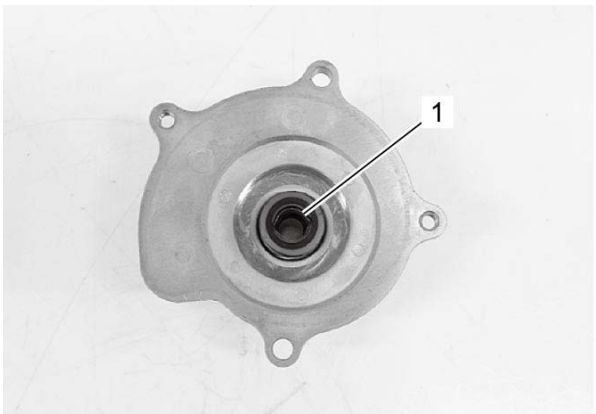

Oil Seal

Visually inspect the oil seal (1) for damage, with particular attention given to the lip.
Replace the oil seal (1) that shows indications of leakage.

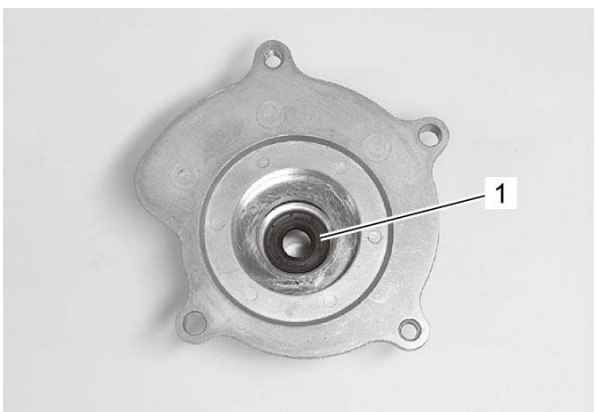

Seal Washer

Visually inspect the seal washer (1) for damage, with particular attention given to the sealing face.
Replace the oil seal washer (1) that shows indications of leakage.

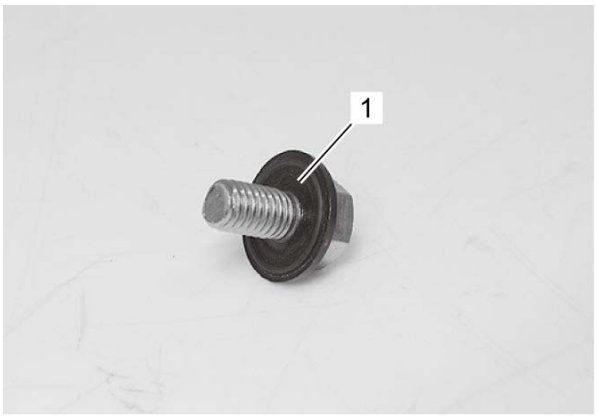

Impeller / Shaft

Visually inspect the impeller (1) and its shaft for damage.
Replace the impeller (1) or shaft (2) if necessary.

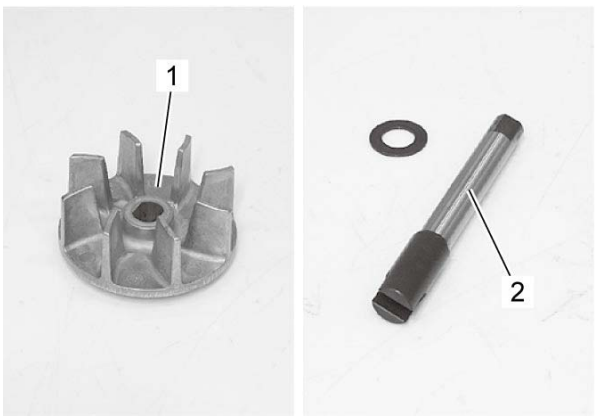

Impeller Shaft Journal

Visually inspect the journal (1) for damage or scratch.
Replace the holder if necessary.

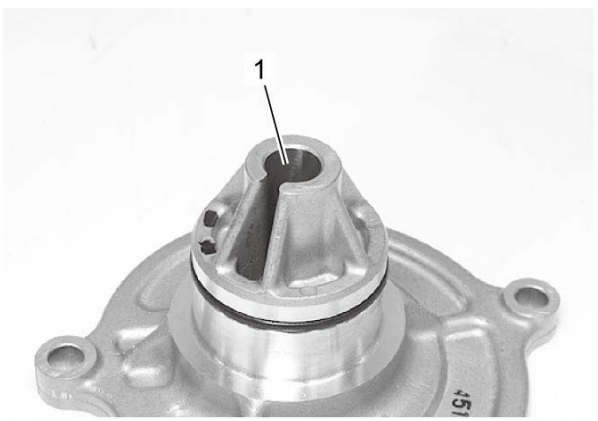



Water Pump Removal and Installation

Removal

1) Drain engine oil. ☞

2) Drain engine coolant. ☞

3) Remove the engine sprocket cover. Refer to ***Clutch Push Rod (Left) / Clutch Release Camshaft Removal and Installation***.

4) Disconnect the oil cooler water inlet hose (1), water bypass hose (2) and cylinder inlet hose (3).

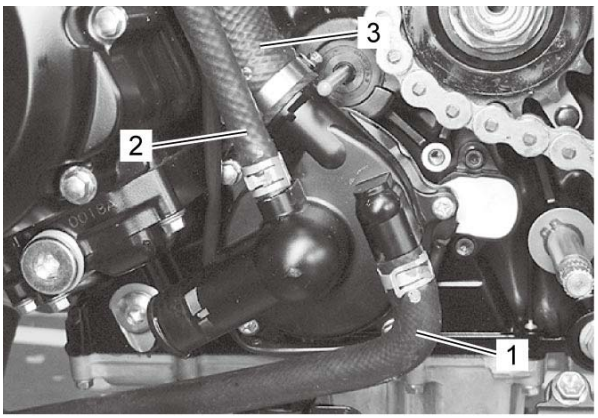

5) Remove the water pump (1).

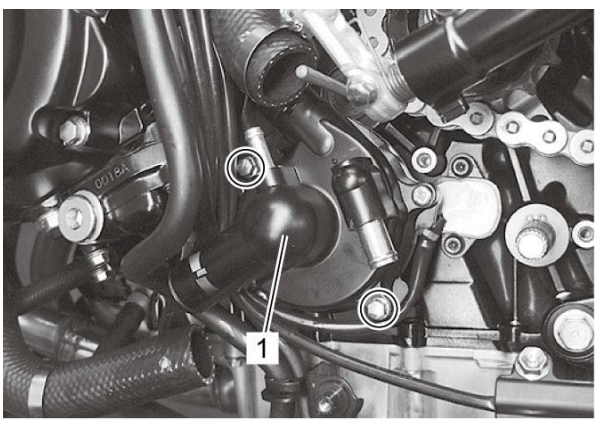

Installation

1) Apply grease to the new O-ring.

"A": Grease 99000–25011 (SUZUKI SUPER GREASE A)

2) Install the water pump assembly (1) with the slot of the pump shaft end (2) securely engaged with the flat (3) of the oil pump shaft.

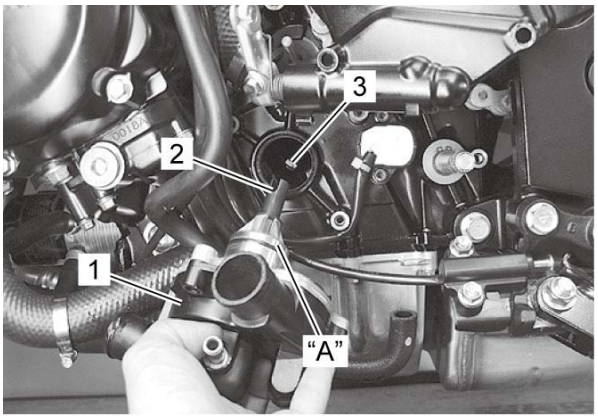

3) Tighten the water pump bolts (1) to the specified torque.

Tightening torque

Water pump bolt (a): 10 N·m (1.0 kgf-m, 7.5 lbf-ft)

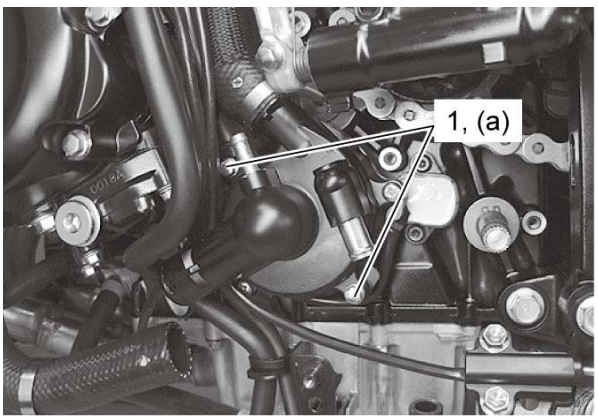

4) Connect the radiator outlet hose No. 2 (1), oil cooler water inlet hose (2), water bypass hose (3) and cylinder inlet hose (4).

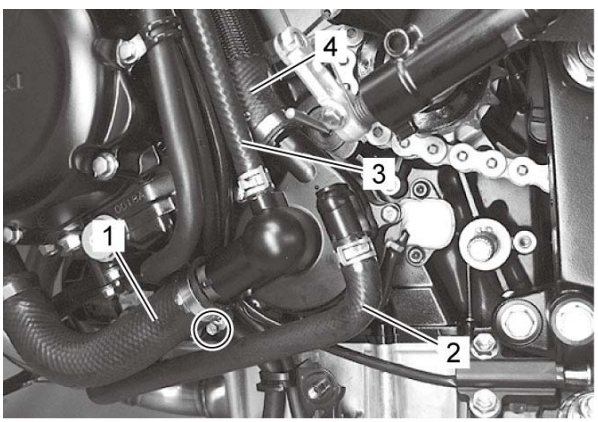



5) Install the engine sprocket cover. Refer to ***Clutch Push Rod (Left) / Clutch Release Camshaft Removal and Installation***.

6) Pour engine oil. ☞

7) Pour engine coolant. ☞

Tightening Torque Specifications

Fastening part	Tightening torque			Note
	N·m	kgf-m	lbf-ft	
Thermostat cover air bolt	6	0.61	4.45	☞
Cooling fan assembly mounting bolt	8.5	0.87	6.30	☞
Radiator mounting bolt	10	1.0	7.5	☞
Water hose clamp screw	1.5	0.15	1.10	☞
Reservoir tank mounting bolt	6	0.61	4.45	☞
Thermostat connector cover bolt	10	1.0	7.5	☞
Water pump bolt	10	1.0	7.5	☞
Impeller securing bolt	8	0.82	5.90	☞
Water pump case screw	5.5	0.56	4.05	☞

Reference:
For the tightening torques of fasteners not specified in this page, refer to:
Water Hose Routing Diagram
Water Pump Assembly Components
Fasteners Information

Recommended Service Material

Material	SUZUKI recommended product or Specification		Note
Assembly lubrication	Molybdenum oil solution	—	☞
Grease	SUZUKI SUPER GREASE A	P/No.: 99000–25011	☞ ☞
Thread lock cement	THREAD LOCK CEMENT 1322D	P/No.: 99000–32150	☞

NOTE:
Required service material(s) is also described in:
Water Pump Assembly Components

Special Tool

09913–70210	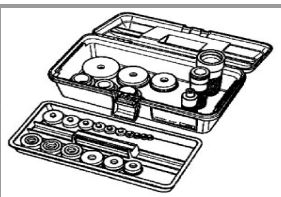	09918–78211	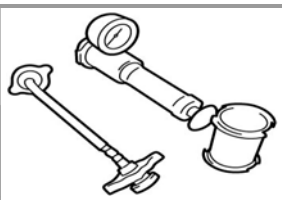
Bearing installer set		Radiator cap tester kit	
☞		☞ ☞	
09918–78220	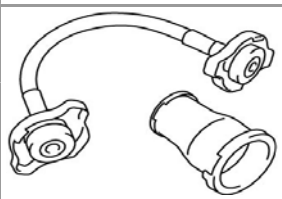	09921–20240	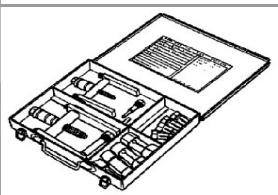
Radiator cap tester adapter		Bearing remover set	
☞ ☞		☞	

Engine Lubrication Symptom Diagnosis

Condition	Possible Cause	Action
Engine overheats	Insufficient amount of engine oil.	*Add engine oil.* ☞
	Defective oil pump.	*Replace.* ☞
	Clogged oil circuit.	*Clean.*
	Incorrect engine oil.	*Change.* ☞
Exhaust smoke is dirty or thick	Excessive amount of engine oil.	*Drain out excess engine oil.* ☞
Engine lacks power	Excessive amount of engine oil.	*Drain out excess engine oil.* ☞

Engine Lubrication System Chart Diagram

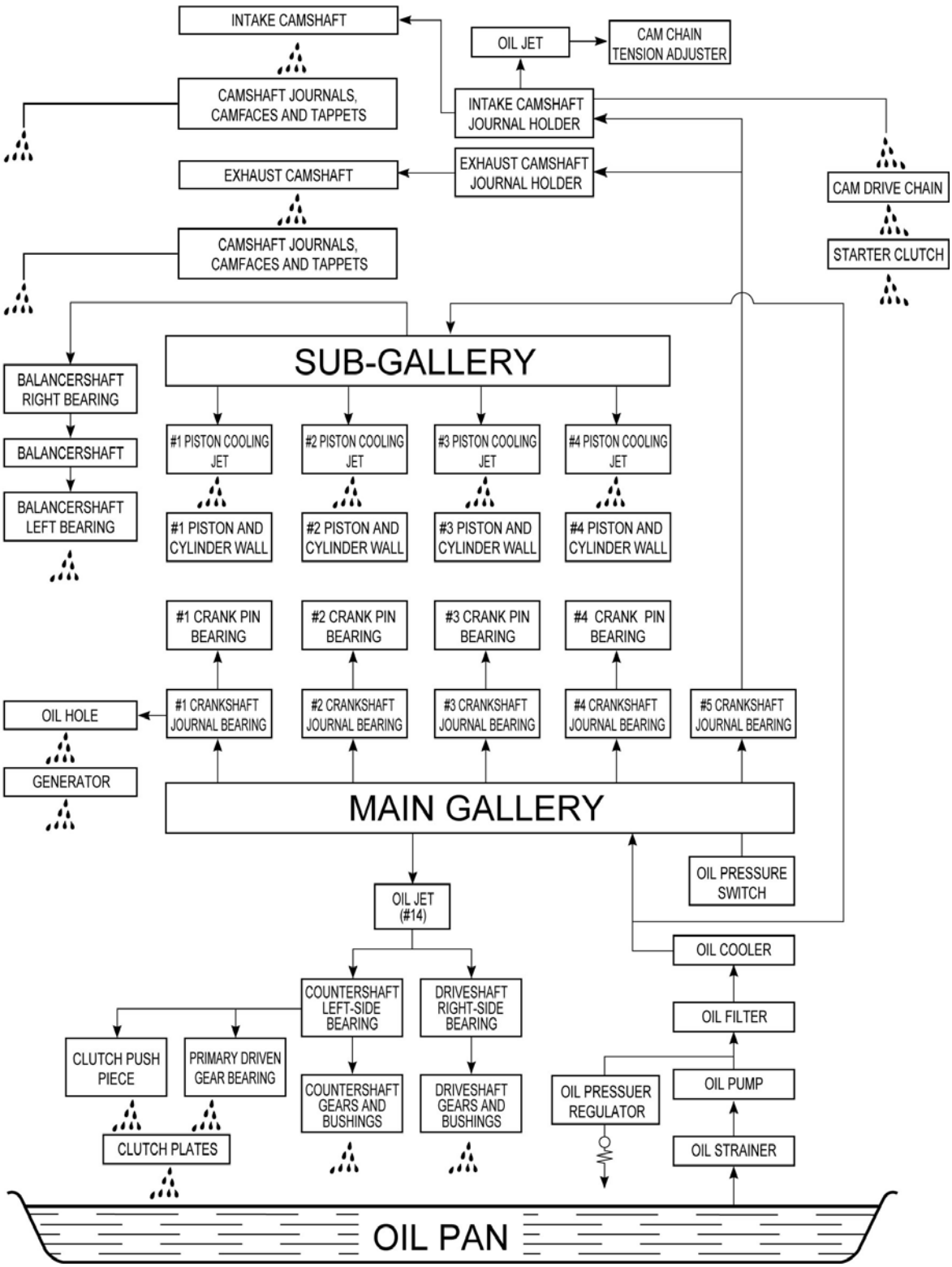

Engine Oil Inspection

Engine Oil Leakage Inspection

Visually check the cylinder, crankcase, etc. for oil leakage.

Engine Oil Level Inspection

1) Keep the motorcycle upright.

2) Start the engine and allow it to run for three minutes at idling speed.

3) Turn off the engine and wait about three minutes, then check the oil level through the inspection window. If the level is below mark “L”, add oil to “F” level. If the level is above mark “F”, drain oil to “F” level.

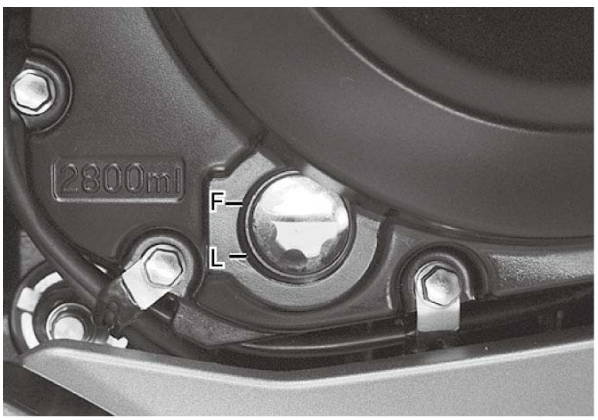

Engine Oil Replacement

1) Place the motorcycle on the side-stand.
2) Place an oil pan below the engine and remove the oil filler cap (1).
3) Drain engine oil by removing the oil drain plug (2).

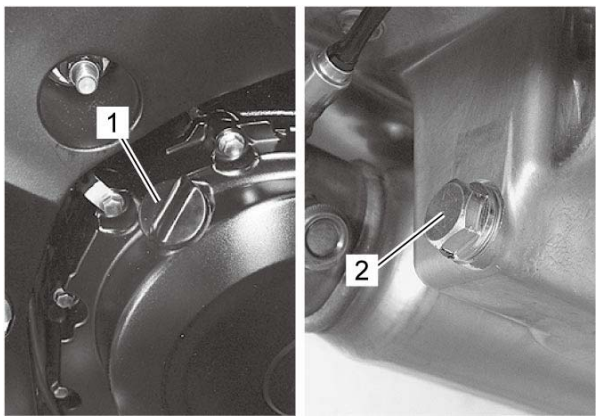

4) Install the new gasket washer to the oil drain plug (1).
5) Tighten the oil drain plug to the specified torque.

Tightening torque

Oil drain plug (a): 23 N·m (2.3 kgf-m, 17.0 lbf-ft)

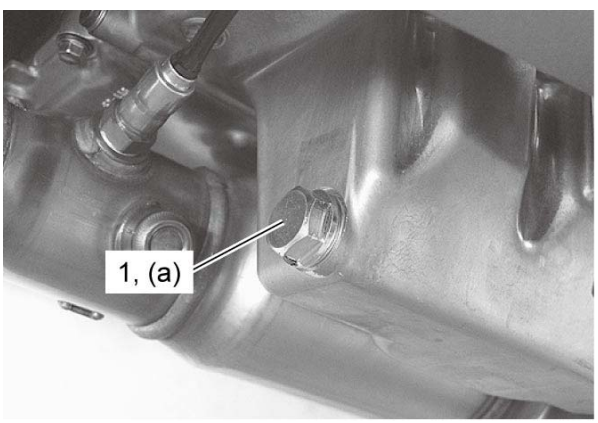

6) Pour new oil through the oil filler hole.

Necessary amount of engine oil

Oil change [Standard]: 2800 ml (3.0 US qt, 2.5 Imp qt)
Oil and filter change [Standard]: 3200 ml (3.4 US qt, 2.8 Imp qt)
Engine overhaul [Standard]: 3400 ml (3.6 US qt, 3.0 Imp qt)

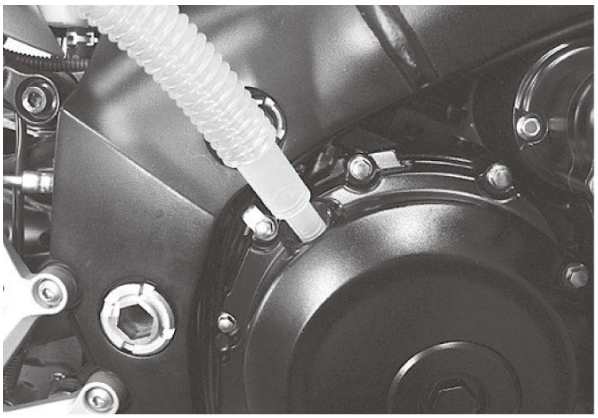

7) Install the oil filler cap.
8) Start the engine and check for oil leakage.
9) Stop the engine and check the engine oil level again.

Oil Cooler / Oil Cooler Hose Inspection

Refer to ***Under Cowling Removal and Installation (GSX-S1000/A)*** and ***Side Cowling Assembly Removal and Installation (GSX-S1000F/FA)***.

Oil Cooler Hose Inspection

Refer to ***Water Hose Inspection***.

Oil Cooler Inspection

Inspect the oil cooler (1) for engine oil leakage. If any defects are found, replace the oil cooler (1) with a new one. Refer to ***Oil Cooler Removal and Installation***.

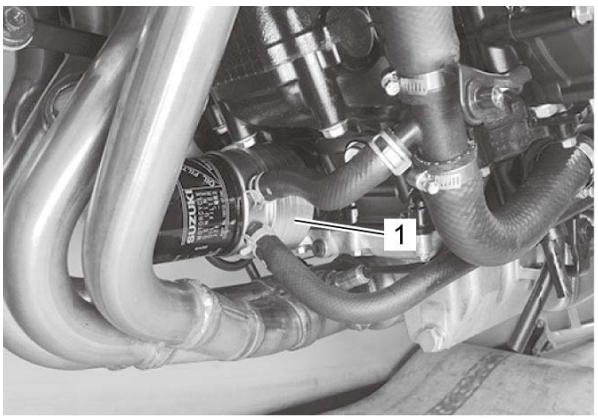

Oil Cooler Removal and Installation

Removal

1) Drain engine coolant. ☞
2) Remove the oil filter. ☞
3) Disconnect the oil cooler water inlet hose (1) and oil cooler water outlet hose (2).
4) Remove the oil cooler union bolt (3) and washer (4).
5) Remove the oil cooler (5).

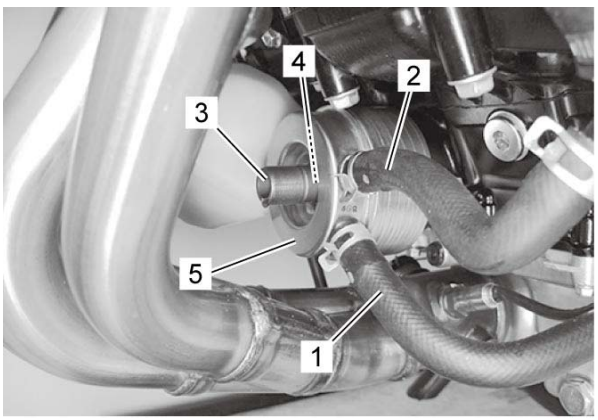

Installation

Install the oil cooler in the reverse order of removal. Pay attention to the following points:

- Apply engine oil to the new O-ring (1).

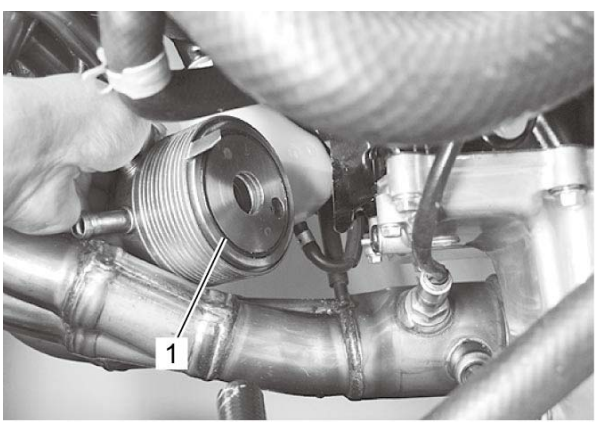

- Install the oil cooler (1) and tighten the oil cooler union bolt (2) to the specified torque.

Tightening torque

Oil cooler union bolt (a): 70 N·m (7.1 kgf-m, 52.0 lbf-ft)

NOTE:
Contact the stopper (3) of oil cooler and crankcase.

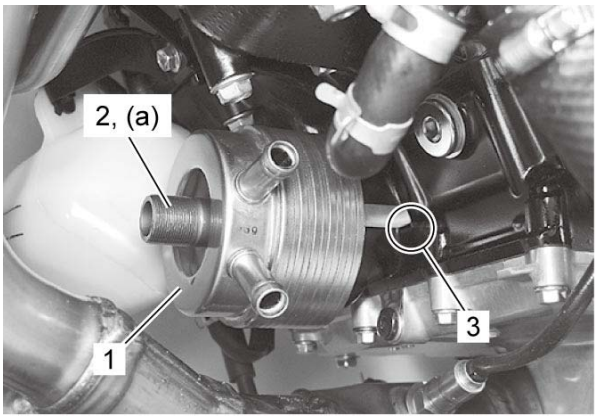

- Contact the oil cooler inlet hose and oil cooler outlet hose. ☞
- Pour engine coolant. ☞
- Install the new oil filter and pour engine oil. ☞

Oil Filter Replacement

1) Drain engine oil. ☞
2) Remove the following parts.
   - Left under cowling (GSX-S1000/A): ☞
   - Left side cowling assembly (GSX-S1000F/FA): ☞
3) Remove the oil filter (1) with the special tool.

NOTE:
Detach the special tool once the oil filter has come loose, and then remove the filter by hand.

Special Tool
(A): 09915–40620

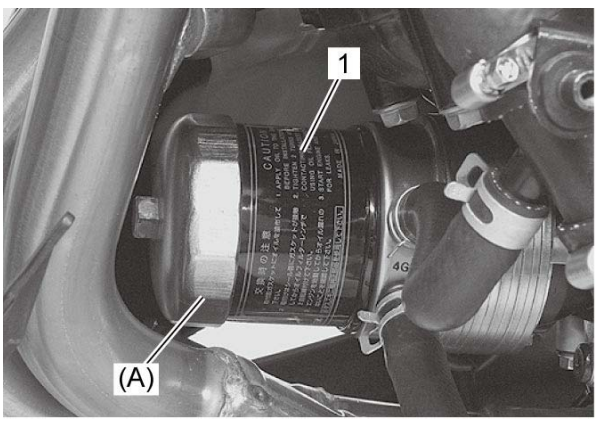

4) Apply engine oil lightly to the O-ring of new oil filter (1) before installation.

NOTICE:
ONLY USE A GENUINE SUZUKI MOTORCYCLE OIL FILTER.
Other manufacturer's oil filters may differ in thread specifications (thread diameter and pitch), filtering performance and durability which may lead to engine damage or oil leaks. Also, do not use a genuine Suzuki automobile oil filter on this motorcycle.

5) Install a new oil filter. Turn it by hand until you feel that the oil filter O-ring contacts the oil filter mounting surface. Then, tighten the oil filter two full turns (or to specified torque) with the special tool.

NOTE:
To properly tighten the oil filter, use the special tool. Never tighten the oil filter by hand only.

Special Tool
(A): 09915–40620

Tightening torque
Oil filter (a): 20 N·m (2.0 kgf-m, 15.0 lbf-ft)

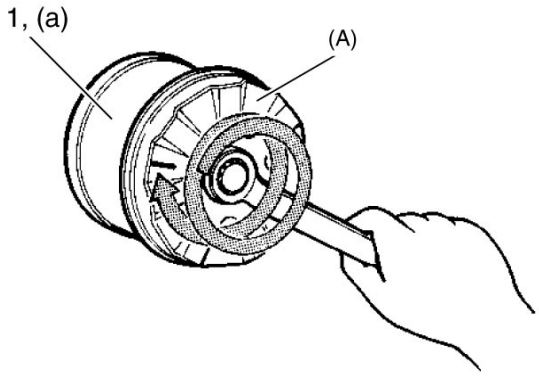

6) Add new engine oil. ☞

7) Check the engine oil level. ☞

Oil Jet / Piston Cooling Jet Inspection

Refer to ***Oil Jet / Piston Cooling Jet Removal and Installation***.
Make sure that the oil jets and piston cooling jet are not clogged. If they are clogged, clean their oil passage using a wire of the proper size and compressed air.

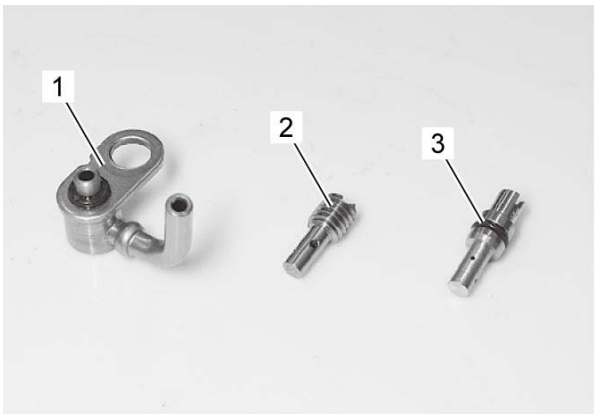

1.	Piston cooling jet
2.	Oil jet (for transmission)
3.	Oil jet (for cam chain tension adjuster)

Oil Jet / Piston Cooling Jet Removal and Installation

Oil Jet (For Cam Chain Tension Adjuster)

Removal

1) Remove the cam chain tension adjuster. ☞
2) Remove the oil jet (1).



Installation

Reference: Oil Jet / Piston Cooling Jet Inspection

Install the oil jet (for cam chain tension adjuster) in the reverse order of removal. Pay attention to the following point:

- Apply engine oil to the new O-ring (1).



Oil Jet (For Transmission)

Removal

1) Separate the crankcases, middle and lower. Refer to ***Balancer Shaft Assembly / Crankshaft / Piston / Cylinder Removal***.
2) Remove the oil jet (for transmission) (1).

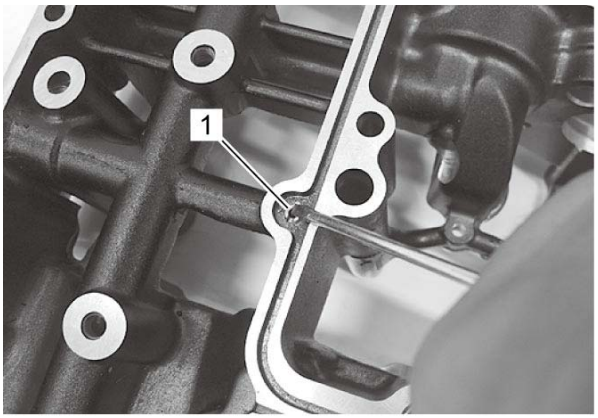

Installation

Reference: Oil Jet / Piston Cooling Jet Inspection
Install the oil jet (for transmission) in the reverse order of removal.

Piston Cooling Jet

Removal

1) Remove the crankshaft assembly. ☞

2) Remove the piston cooling jets (1).

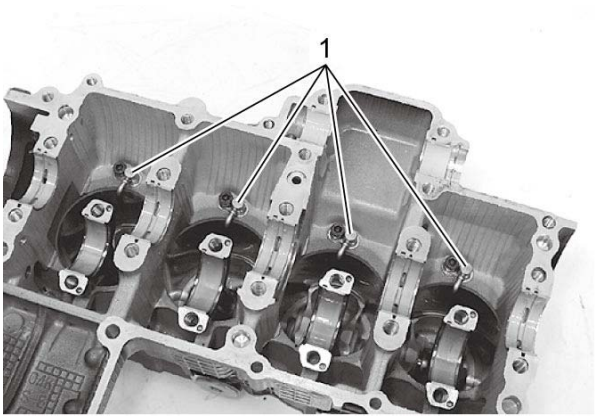

Installation

Reference: Oil Jet / Piston Cooling Jet Inspection
Install the piston cooling jet in the reverse order of removal. Pay attention to the following points:
- Apply engine oil to the new O-ring (1).
- Apply thread lock to the piston cooling jet bolt (2) and tighten it to the specified torque.

"A": Thread lock cement 99000–32150 (THREAD LOCK CEMENT 1322D)

Tightening torque

Piston cooling jet bolt (a): 10 N·m (1.0 kgf-m, 7.5 lbf-ft)

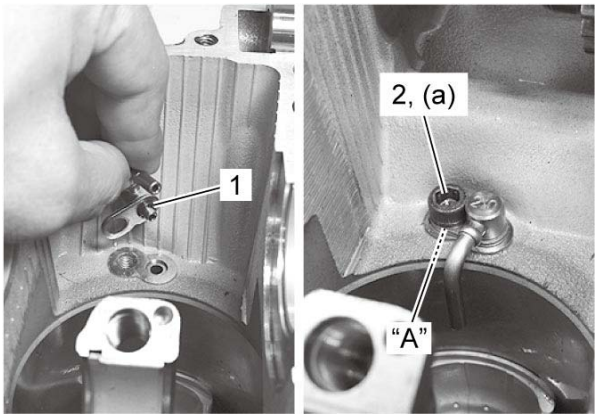
1
2, (a)
“A”

Oil Pan / Oil Strainer / Oil Pressure Regulator Removal and Installation

Removal

1) Drain engine oil. ☞

2) Remove the exhaust pipe. ☞

3) Remove the under cowling brackets (1) and (2).

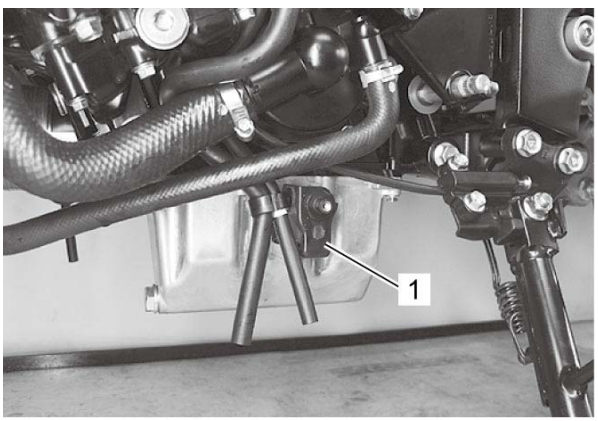

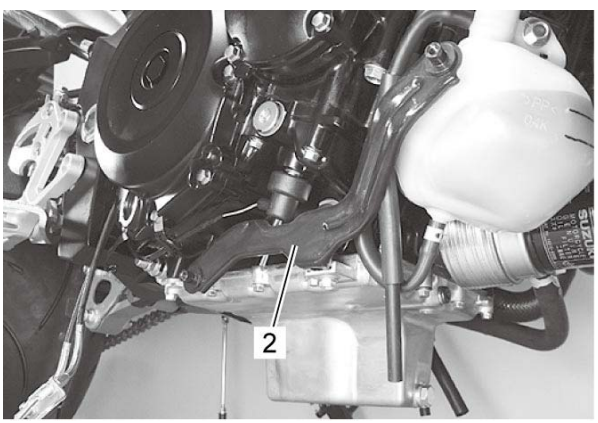

4) Remove the oil pan (1) and gasket (2).

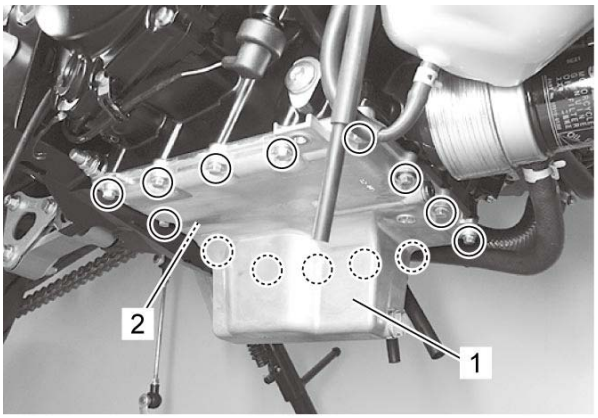

5) Remove the oil strainer (1) and oil gallery pipe (2).

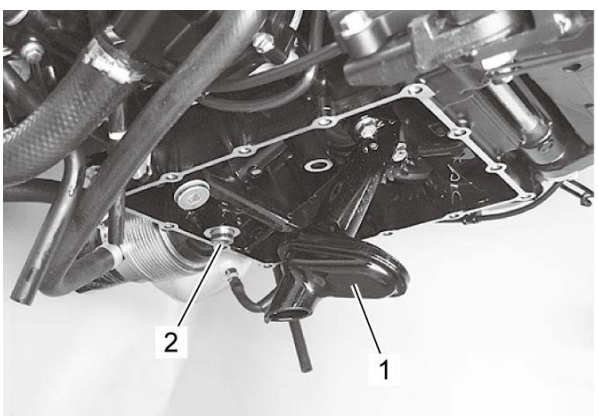

6) Remove the O-ring (1).

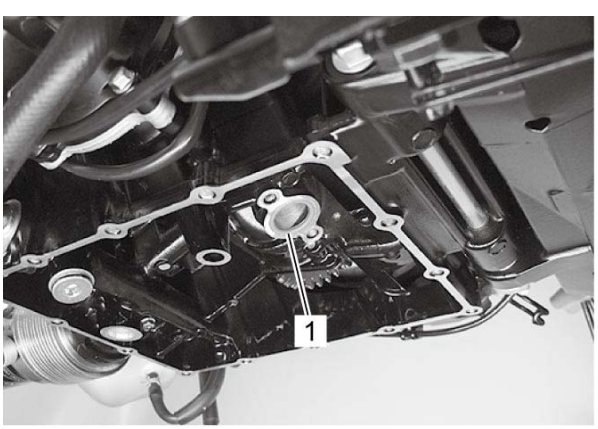

7) Remove the oil pressure regulator case (1) and oil pressure regulator (2).

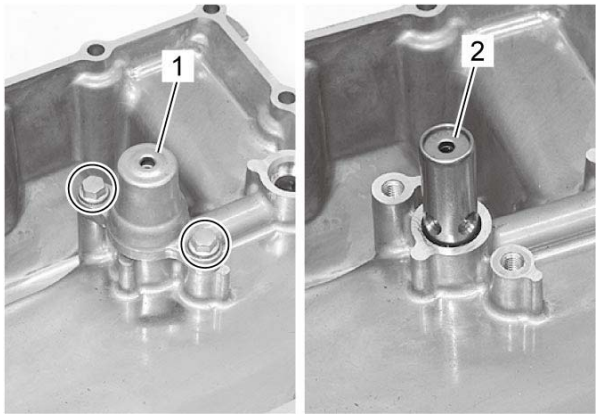

8) Remove the oil gallery plug (M10) (1).

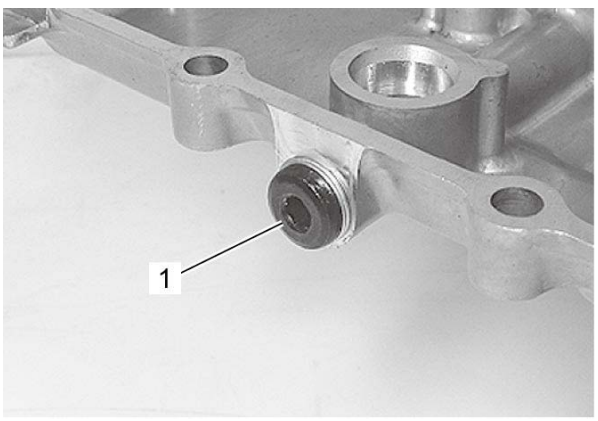

Installation

1) Install the new gasket (1) to the oil gallery plug (M10) (2).

NOTE:
The edge (3) of gasket (1) faces the oil gallery plug (M10) (2) side.

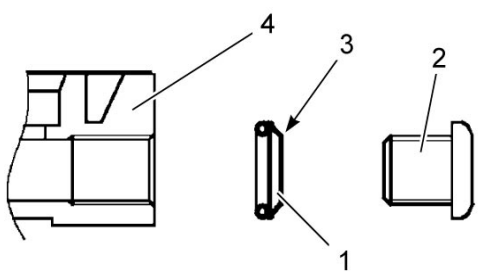

4.	Oil pan

2) Tighten the oil gallery plug (M10) (1) to the specified torque.

Tightening torque

Oil gallery plug (M10) (a): 11 N·m (1.1 kgf-m, 8.5 lbf-ft)

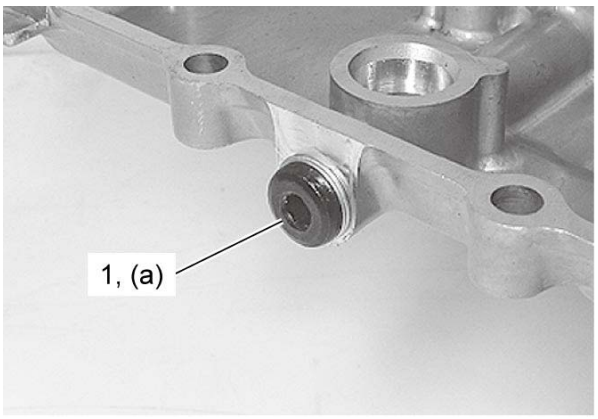

3) Apply engine oil to the new O-ring (1).

4) Install the oil pressure regulator (2) and oil pressure regulator case (3).

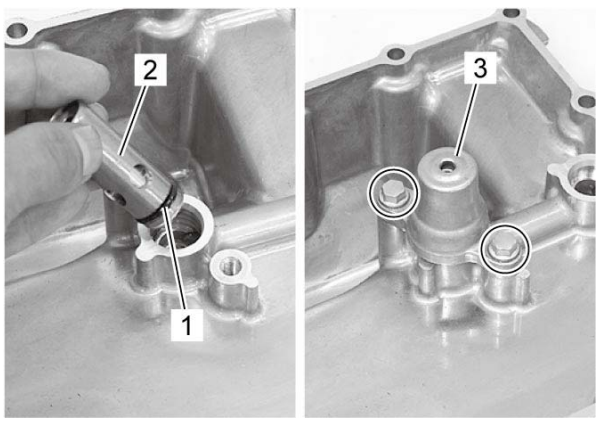

5) Apply engine oil to the new O-ring (1).

6) Install the oil strainer (2).

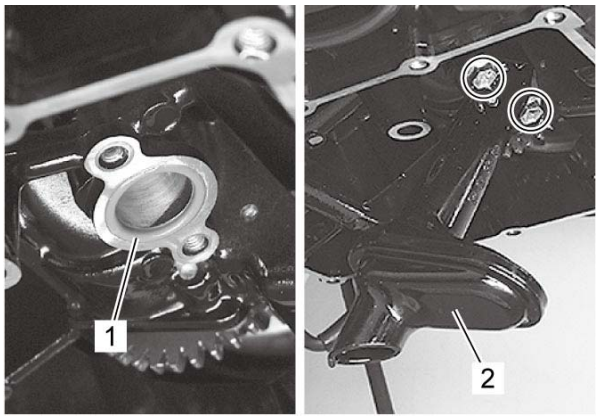

7) Apply engine oil to the new O-rings (1).

8) Install the oil gallery pipe (2).

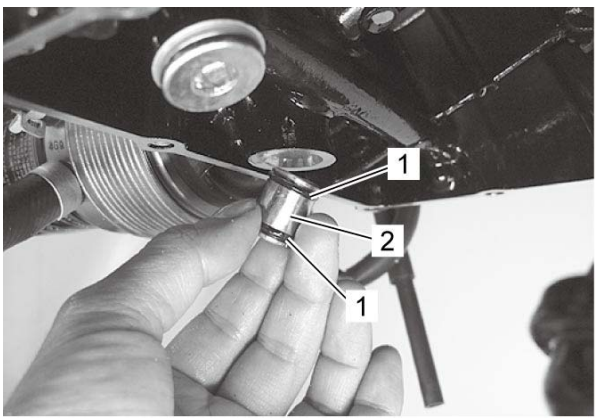

9) Fit the new gasket (1) and oil pan (2).

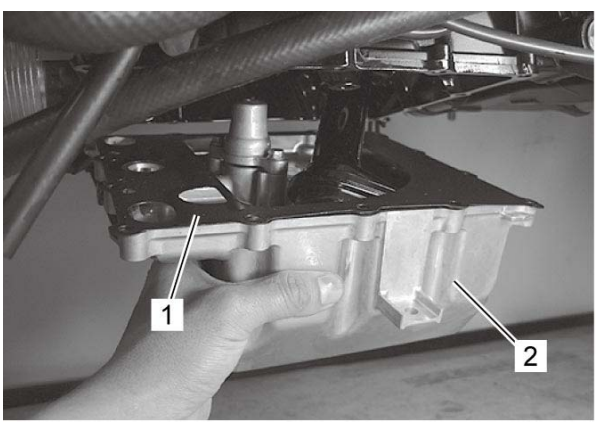

10) Install the new gasket washer to the bolts (1) and tighten the bolts (1) and (2) to the specified

torque.

Tightening torque

Oil pan bolt (a): 10 N·m (1.0 kgf-m, 7.5 lbf-ft)

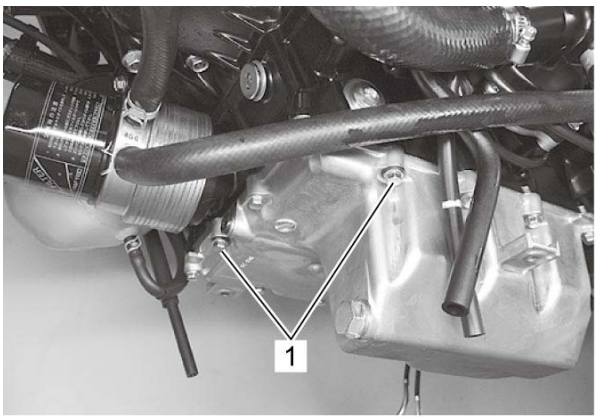

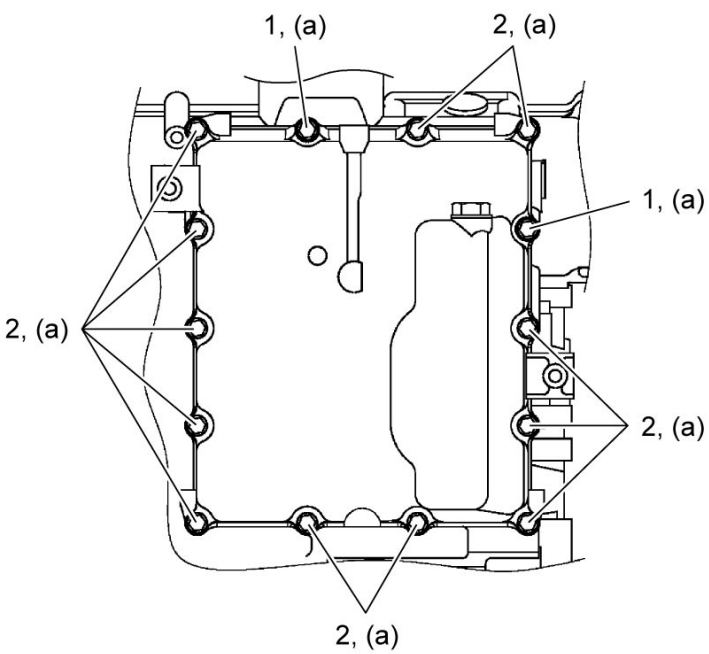

11) Install the under cowling brackets (1) and (2).

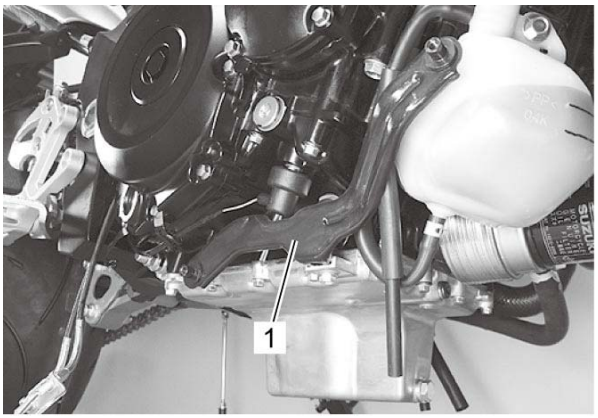

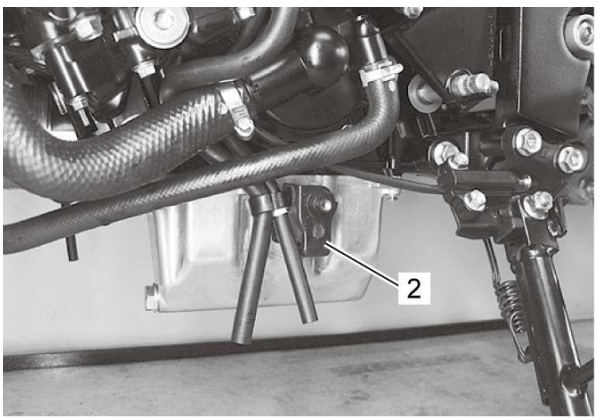

12) Install the exhaust pipe. ☞

13) Pour engine oil. ☞

Oil Pressure Check

Check the engine oil pressure periodically. This will give a good indication of the condition of the moving parts.

NOTE:
Before checking the oil pressure, check the following:
- **Oil level:** ☞
- **Oil leaks (If leak is found, repair it.)**
- **Oil quality (If oil is discolored or deteriorated, replace it.)**

1) Start the engine and check if the oil pressure indicator light is turned on. If the light stays on, check the oil pressure indicator light circuit. If the circuit is OK, check the oil pressure in the following manner.

2) Remove the oil gallery plug (M16) (1).

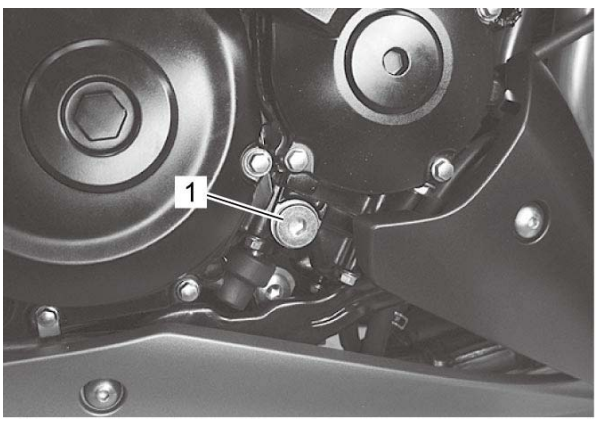

3) Install the oil pressure gauge and attachment into the oil gallery.

Special Tool
(A): 09915–77331
(B): 09915–74521
(C): 09915–74540

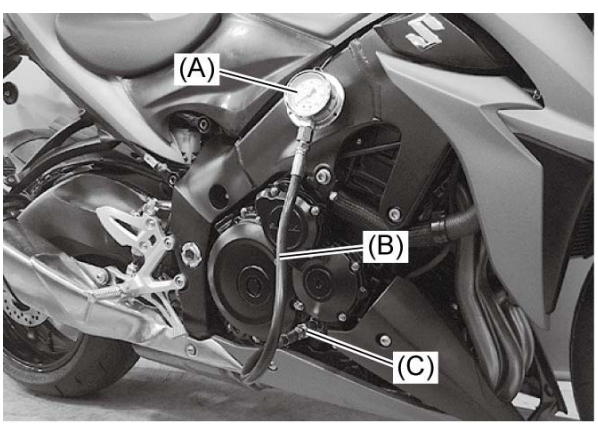

4) Warm up the engine as follows:
Summer: 10 min. at 2000 r/min
Winter: 20 min. at 2000 r/min

5) After warm up, increase the engine speed to 3000 r/min and read the oil pressure gauge.
If the oil pressure is lower or higher than the specification, the following causes may be considered.

Oil pressure

At 60 °C (140 °F), 3000 r/min
[Standard]: 100 – 400 kPa (1.0 – 4.1 kgf/cm^2, 14.5 – 58.0 psi)

High oil pressure	Low oil pressure
• Engine oil viscosity is too high • Clogged oil passage • Combination of the above items	• Clogged oil filter • Oil leakage from the oil passage • Damaged O-ring • Defective oil pump • Combination of the above items

6) Stop the engine and remove the oil pressure gauge and attachment.

⚠WARNING:
To avoid the risk of being burned, remove the oil pressure gauge when the oil has cooled.

7) Install the new gasket to the oil gallery plug (M16) (1).

8) Install the oil gallery plug (M16) (1) and tighten it to the specified torque.

Tightening torque

Oil gallery plug (M16) (a): 35 N·m (3.6 kgf-m, 26.0 lbf-ft)

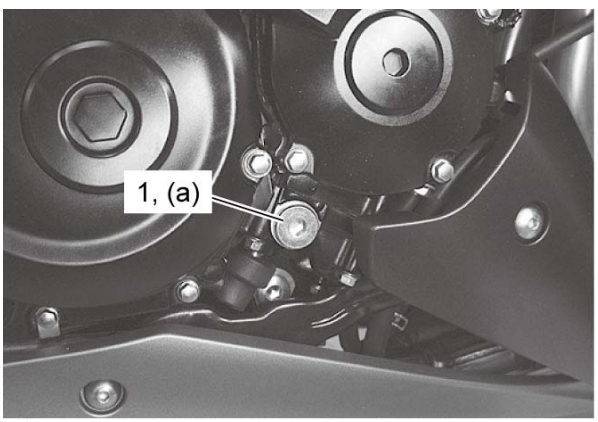

9) Check the engine oil level. ☞

Oil Pressure Regulator / Oil Strainer Inspection

Refer to ***Oil Pan / Oil Strainer / Oil Pressure Regulator Removal and Installation***.

Oil Pressure Regulator

Inspect the operation of the oil pressure regulator (1) by pushing on the piston with a proper bar. If the piston does not operate, replace the oil pressure regulator with a new one.

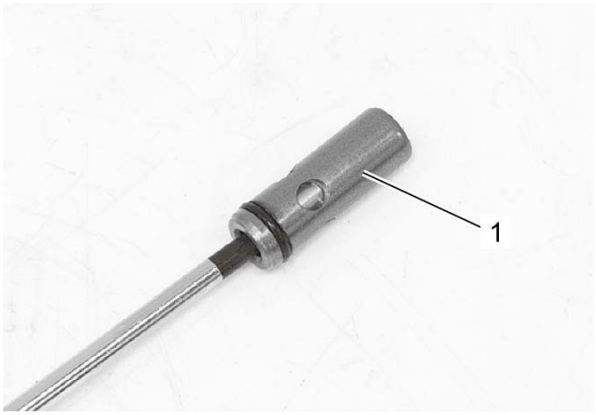

Oil Strainer

Clean the oil strainer if necessary. Inspect the oil strainer body for damage. If necessary, replace it with a new one.



Oil Pressure Switch Removal and Installation

Reference: Electrical Components Location

Removal

1) Turn the ignition switch OFF.

2) Remove the following parts.
- Right under cowling (GSX-S1000/A): ☞
- Right side cowling assembly (GSX-S1000F/FA): ☞

3) Remove the right under cowling bracket (1).

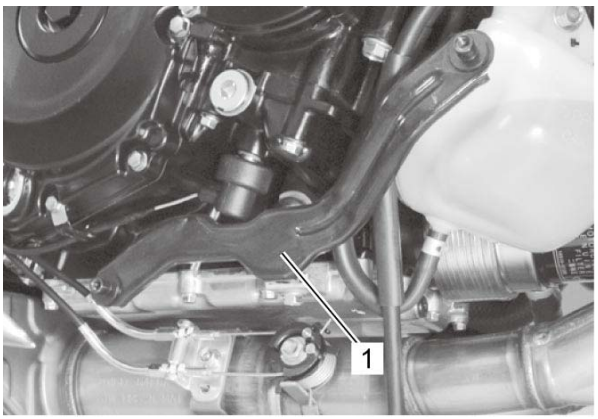

4) Drain engine oil. ☞

5) Disconnect the oil pressure switch lead wire (1).

6) Remove the oil pressure switch (2).

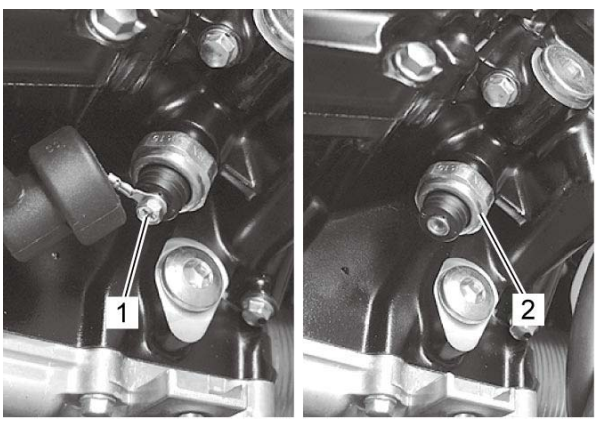

Installation

1) Install the oil pressure switch (1), apply the sealant to its thread part and tighten it to the specified torque.

NOTE:
Do not apply sealant to oil pressure switch hole.

"A": Sealant 99000–31140 (SUZUKI BOND 1207B)

Tightening torque
Oil pressure switch (a): 13 N·m (1.3 kgf-m, 9.5 lbf-ft)

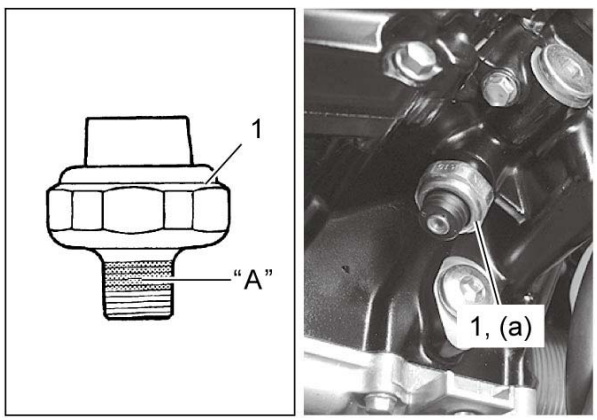

2) Connect the oil pressure switch lead wire (1). ☞

Tightening torque
Oil pressure switch lead wire connecting screw (a): 1.5 N·m (0.15 kgf-m, 1.10 lbf-ft)

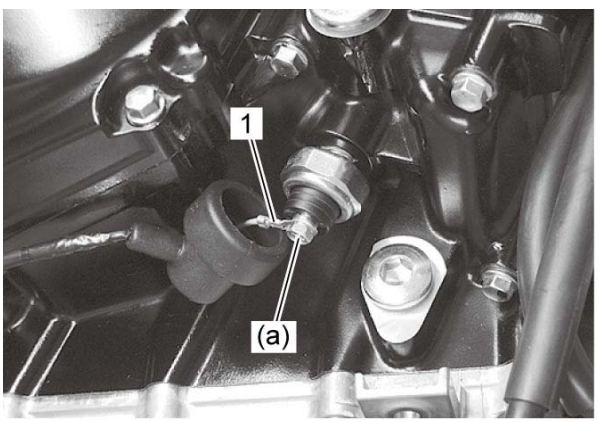

3) Pour engine oil. ☞

Oil Pump Inspection

Refer to ***Oil Pump Removal and Installation***.
Rotate the oil pump shaft by hand and check that it moves smoothly. If it does not move smoothly, replace the oil pump assembly.



Oil Pump Removal and Installation

Refer to ***Clutch Removal*** and ***Clutch Installation***.

NOTE:
Be careful not to drop any parts into the crankcase.

Removal

1) Remove the circlip (1).

Special Tool
09900–06107

2) Remove the oil pump driven gear (2) and pin (3).

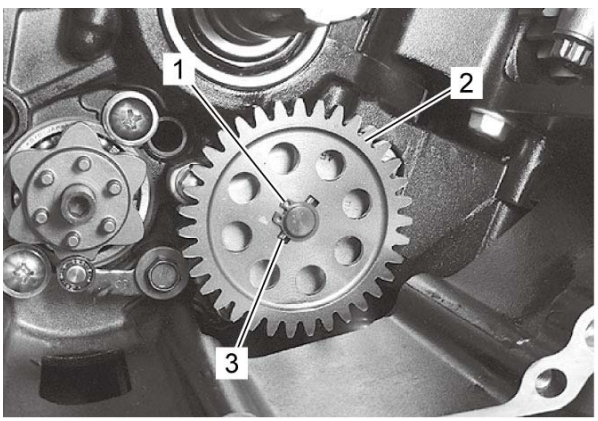

3) Remove the washer (1) and oil pump assembly (2).

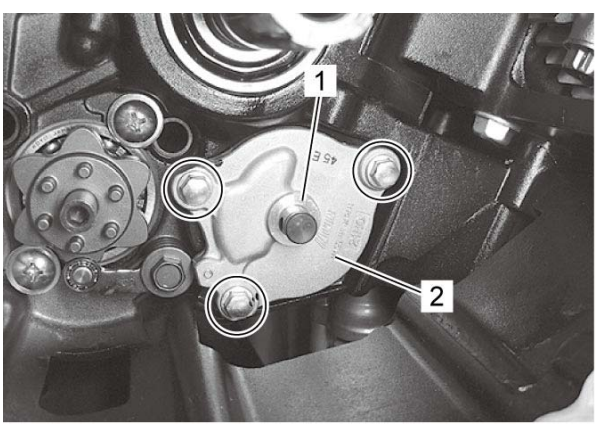

Installation

Reference: Oil Pump Inspection

Install the oil pump in the reverse order of removal. Pay attention to the following points:

- Apply engine oil to the new O-ring (1).
- Install the oil pump with the slot on the shaft end (2) securely engaged with the groove on the water pump shaft.

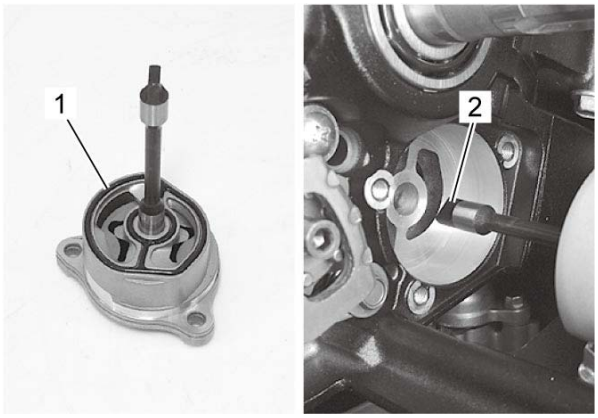

- Tighten the bolts (1) to the specified torque.

Tightening torque

Oil pump bolt (a): 10 N·m (1.0 kgf-m, 7.5 lbf-ft)

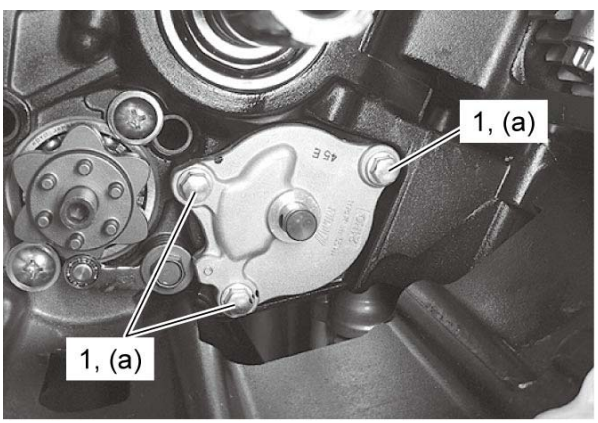

- Install the washer (1) and pin (2).

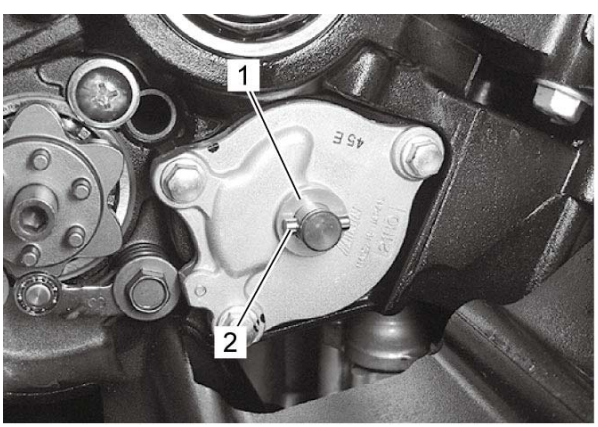

- Install the oil pump driven gear (1) and new circlip (2).

Special Tool
09900–06107

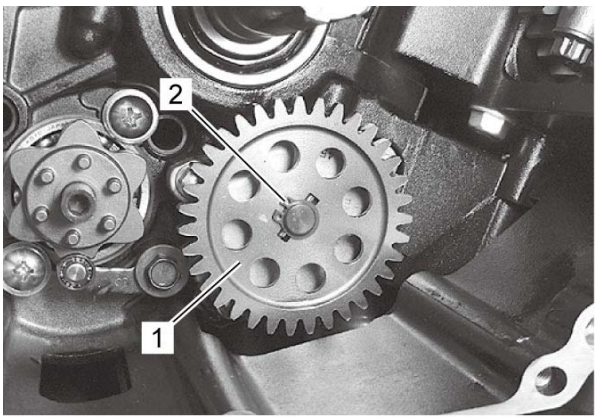

Tightening Torque Specifications

Fastening part	Tightening torque			Note
	N·m	kgf-m	lbf-ft	
Oil gallery plug (M16)	35	3.6	26.0	☞
Oil drain plug	23	2.3	17.0	☞
Oil filter	20	2.0	15.0	☞
Oil gallery plug (M10)	11	1.1	8.5	☞
Oil pan bolt	10	1.0	7.5	☞
Oil cooler union bolt	70	7.1	52.0	☞
Oil pressure switch	13	1.3	9.5	☞
Oil pressure switch lead wire connecting screw	1.5	0.15	1.10	☞
Piston cooling jet bolt	10	1.0	7.5	☞
Oil pump bolt	10	1.0	7.5	☞

Reference:
For the tightening torques of fasteners not specified in this page, refer to:
Fasteners Information

Recommended Service Material

Material	SUZUKI recommended product or Specification		Note
Sealant	SUZUKI BOND 1207B	P/No.: 99000–31140	☞
Thread lock cement	THREAD LOCK CEMENT 1322D	P/No.: 99000–32150	☞

Special Tool

09900–06107 Snap ring pliers (External) ☞ ☞	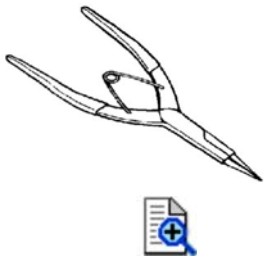	09915–40620 Oil filter wrench ☞ ☞	
09915–74521 Oil pressure gauge hose ☞	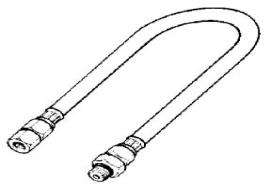	09915–74540 Oil pressure gauge attachment ☞	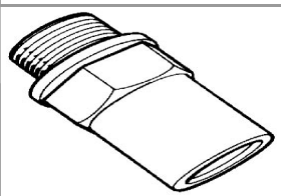
09915–77331 Oil pressure gauge (1000 kpa) ☞	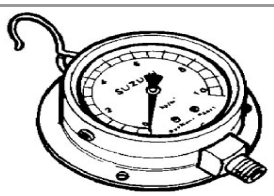		

Air Cleaner Box Removal and Installation

Reference: Intake System Construction

Removal

1) Lift and support the fuel tank. ☞

2) Remove the ECM. ☞

3) Remove the air cleaner mounting bolt (1).



4) Loosen the air cleaner outlet tube clamp screws (1).

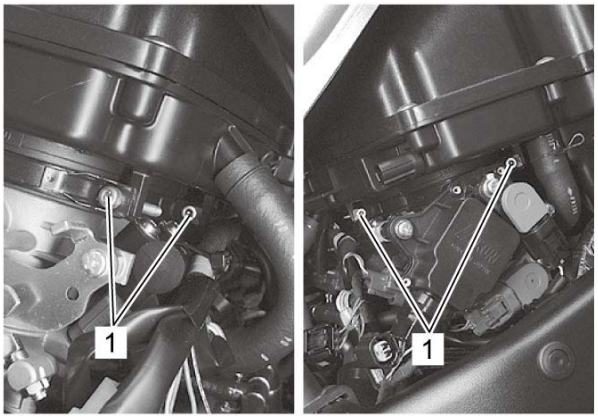

5) Disconnect the IAT sensor coupler (1) and PAIR hose (2).

6) Remove the AP sensor (3) and IAP sensor (4).

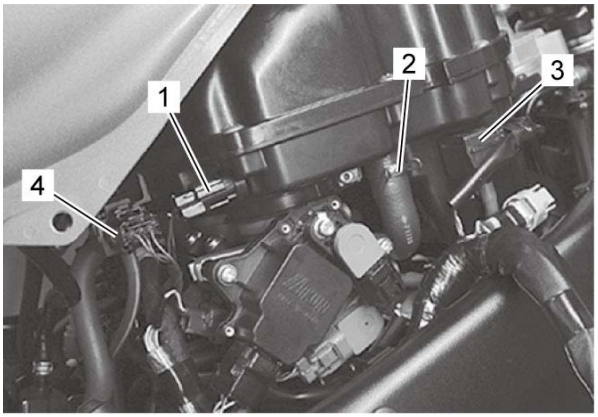

7) Disconnect ISC valve hose (1) and PCV hose (2).
8) Remove the air cleaner box.

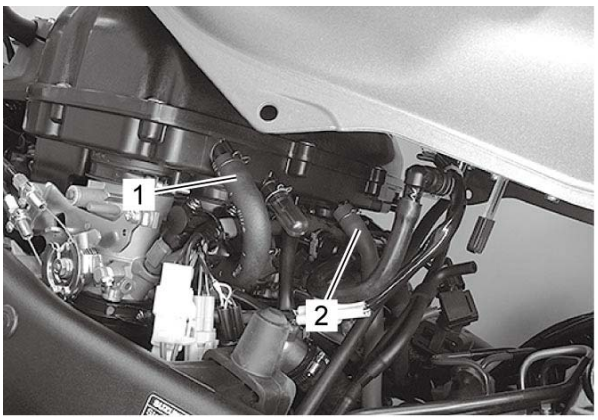

Installation

Install the air cleaner box in the reverse order of removal. Pay attention to the following points:
- Route the hoses properly. Refer to ***Intake System Construction***.
- Tighten the outlet clamp screws (1) to the specified torque.

Tightening torque

Air cleaner outlet tube clamp screw (a): 1.5 N·m (0.15 kgf-m, 1.10 lbf-ft)

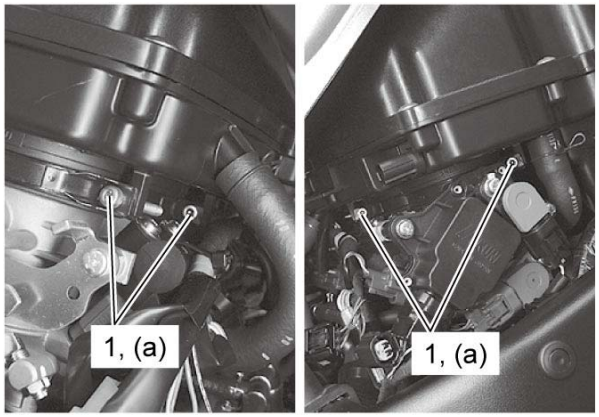

- Tighten the air cleaner bolt (1) to the specified torque.

Tightening torque

Air cleaner bolt (a): 5.5 N·m (0.56 kgf-m, 4.05 lbf-ft)

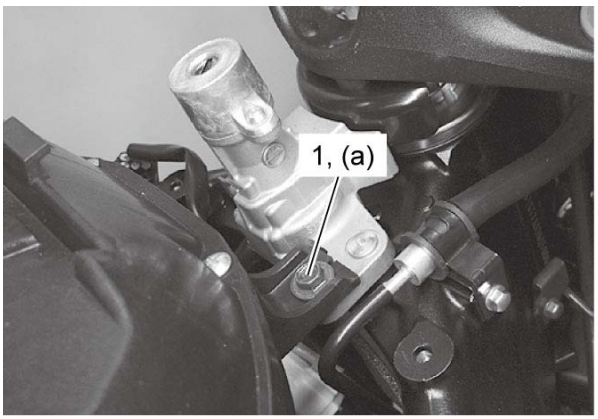

Air Cleaner Element Inspection

Refer to ***Air Cleaner Element Removal and Installation***.

1) Inspect the air cleaner element for clogging. If it is clogged with dirt, replace it with a new one.

NOTICE:
- **Do not blow the air cleaner element with compressed air.**
- **If driving under dusty conditions, replace the air cleaner element more frequently. Make sure that the air cleaner is in good condition at all times. Life of the engine depends largely on this component.**



2) Remove the drain plug (1) and drain water from the air cleaner box.

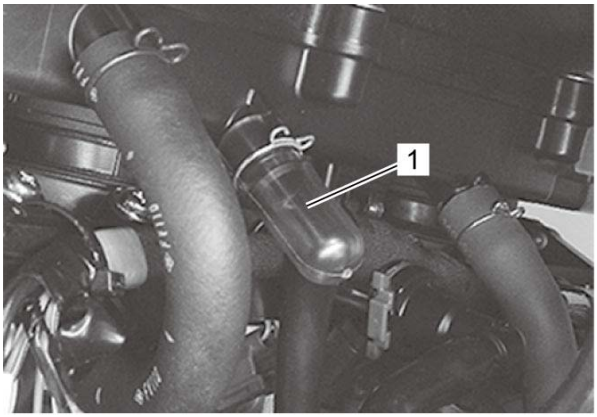

3) Install the drain plug.

Air Cleaner Element Removal and Installation

Removal

1) Lift and support the fuel tank. ☞
2) Remove the ECM. ☞
3) Remove the plug (1).
4) Remove the air cleaner cover (2).

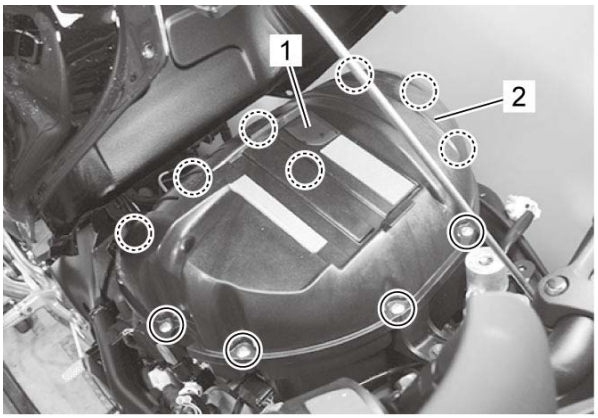

5) Remove the air cleaner element (1).

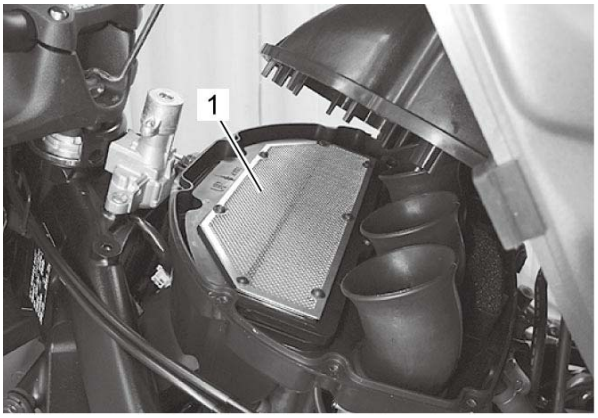

Installation

Install the air cleaner element in the reverse order of removal. Pay attention to the following point:

- Install the plug (1) to the air cleaner cover correctly.

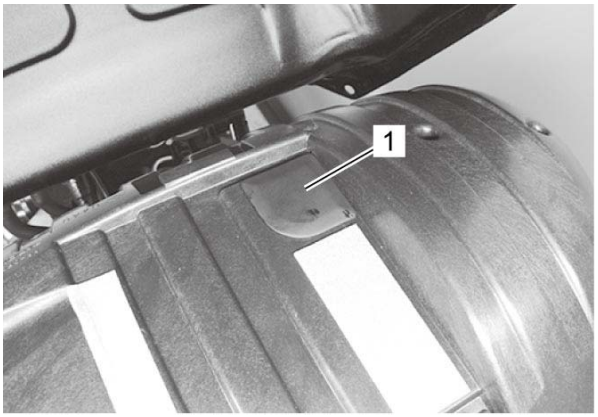
1

Balancer Shaft Assembly / Crankshaft / Piston / Cylinder Installation

Reference: Piston / Piston Ring Inspection
Reference: Conrod Crank Pin Bearing Inspection and Selection
Reference: Cylinder Inspection

Piston / Conrod

1) Apply a small quantity of molybdenum oil solution onto each piston pin.

"A": Assembly lubrication (Molybdenum oil solution)

2) Assemble the piston and conrod.

NOTE:
When installing the pistons, the indent (1) on the piston head must be brought to the other side of I.D. code (2) on the conrod big end.

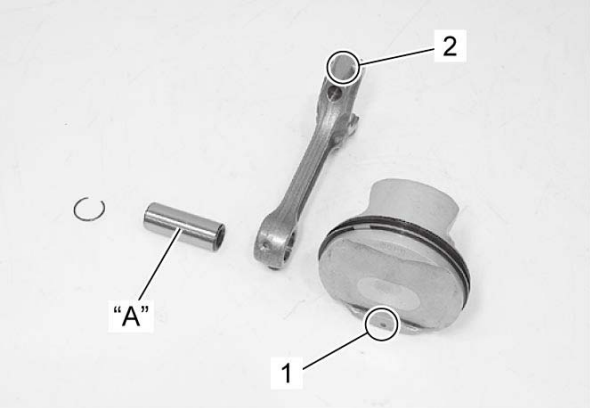

3) Install the new piston pin circlips (1).

NOTE:
End gap of the circlip (1) should not be aligned with the cutaway (2) in the piston pin bore.

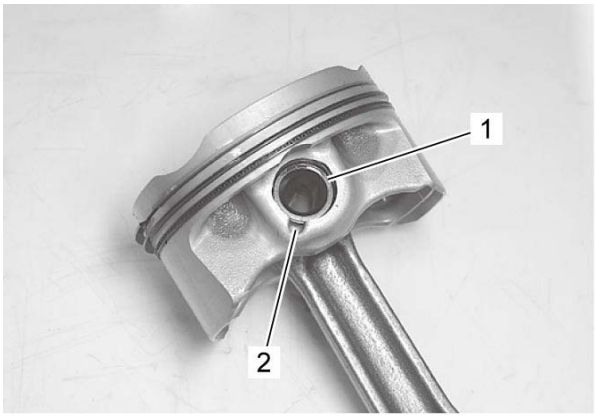

4) Apply a small quantity of molybdenum oil solution to the sliding surface of the pistons and cylinder walls.

"A": Assembly lubrication (Molybdenum oil solution)

NOTE:
Be sure to install the pistons in the cylinders from which they were removed in disassembly, referring to the cylinder numbers, #1 through #4, scribed on the piston.

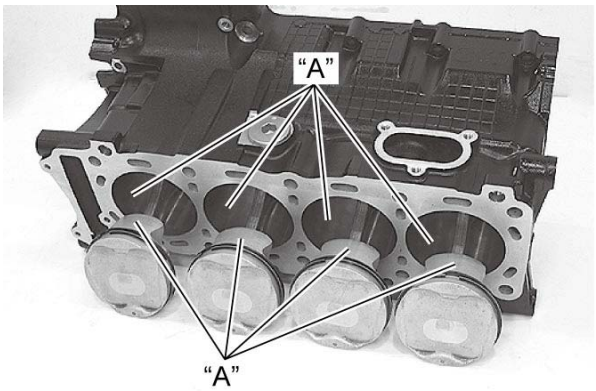

5) Install the pistons with conrods into the cylinders from topside using the special tool.

NOTE:
When installing the pistons, the indent (1) of each piston head must be brought to the exhaust side.

Special Tool
(A): 09916–77310

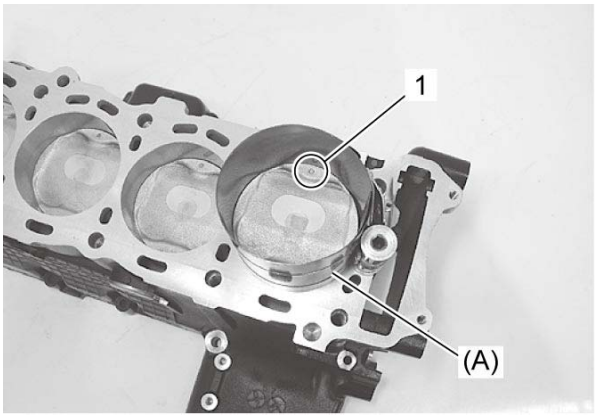

6) Clean each conrod big end.

7) Check that I.D. code (1) on each conrod faces intake side.

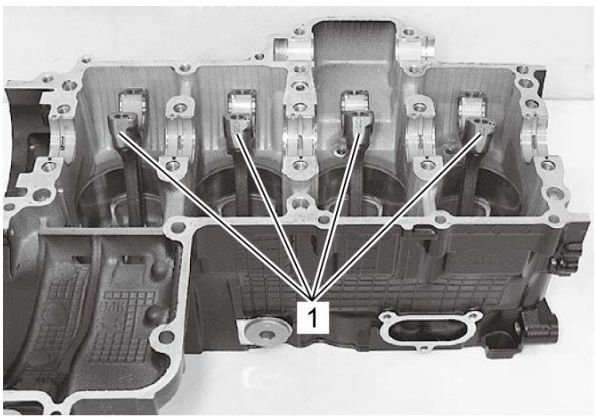

Piston Cooling Jet

Install each position cooling jets (1). ☞

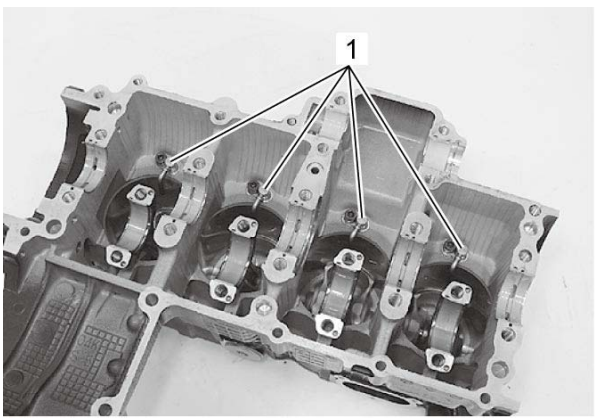

Crankshaft

1) Apply engine oil to each crank pin bearing surface (1) and crankshaft journal bearing surface (2).

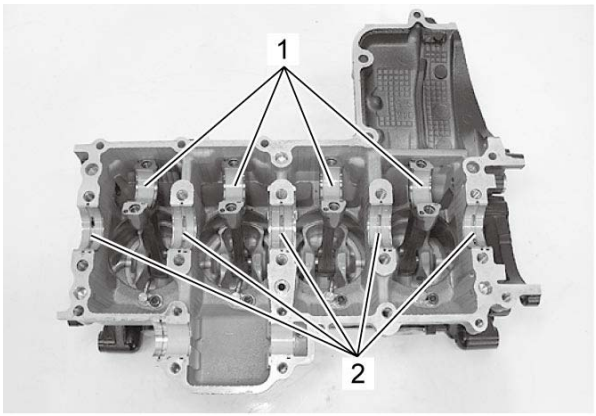

2) Position the #2 and #3 conrod big ends (1) on the same side, and the #1 and #4 conrod big ends (2) on the opposite side of #2 and #3.

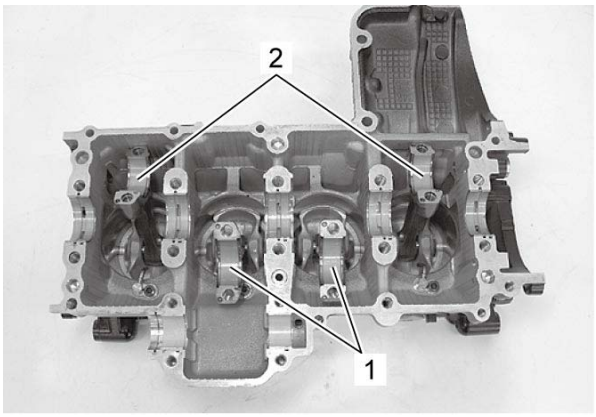

3) Set the crankshaft onto the conrods and upper crankcase.

4) Clean each conrod big end.

5) Apply engine oil to each crank pin (1) and bearing surface (2).

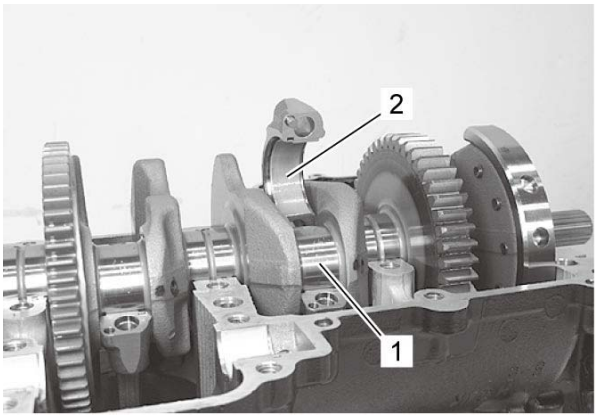

6) When fitting the conrod cap (1), make sure that I.D. code (2) on each conrod faces intake side.

7) Apply engine oil to the flange and thread portion of the conrod cap bolts (3).

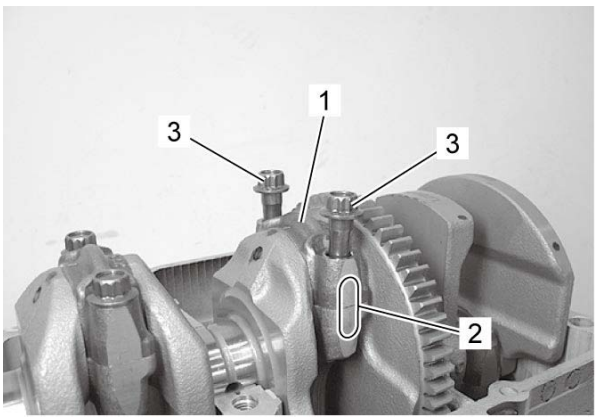

8) Tighten the conrod cap bolt by using a 10 mm, 12 point socket wrench in the following two steps.

Tightening torque

Conrod cap bolt (a): 21 N·m (2.1 kgf-m, 15.5 lbf-ft) → turn clock wise 90°

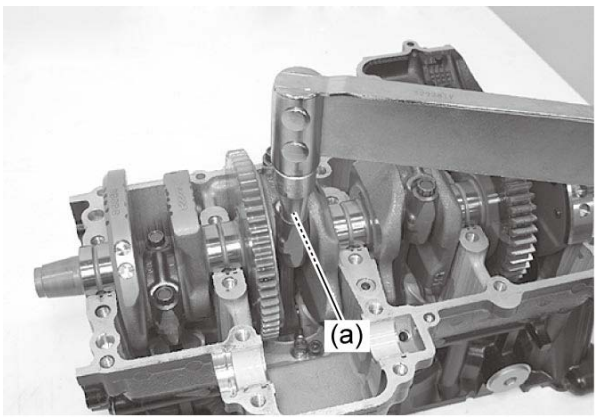

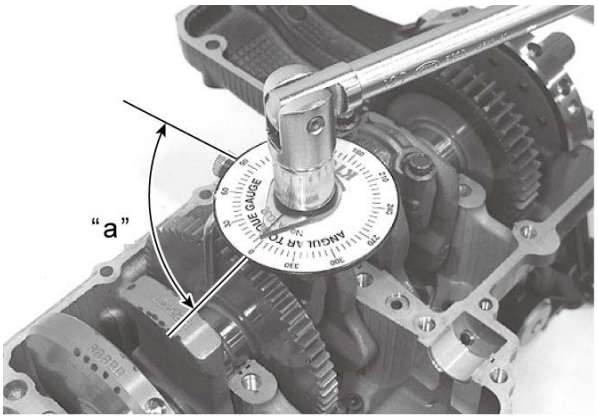

"a":	90°

9) Apply engine oil to the conrod big end side surfaces (1).

10) Apply engine oil to each crankshaft journal (2) and bearing lightly.

11) Check the conrod movement for smooth turning.

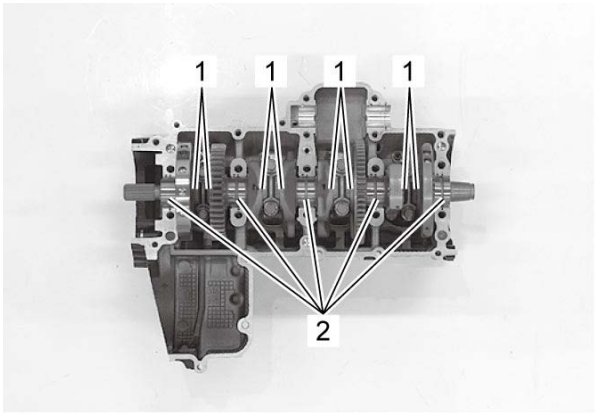

12) Insert the right and left thrust bearings with the oil grooves (1) facing towards the crankshaft web.

NOTE:
- **Right-thrust bearing (2) has green painting.**
- **Inspect and select the crankshaft thrust clearance if necessary.** ☞

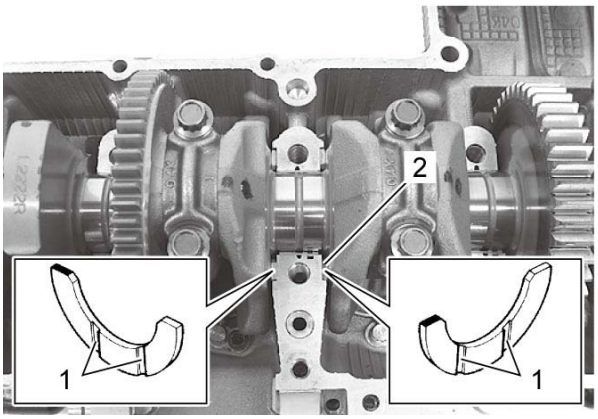

Balancer Shaft

1) Apply a engine oil to each balancer shaft journal (1) and bearing (2) lightly.

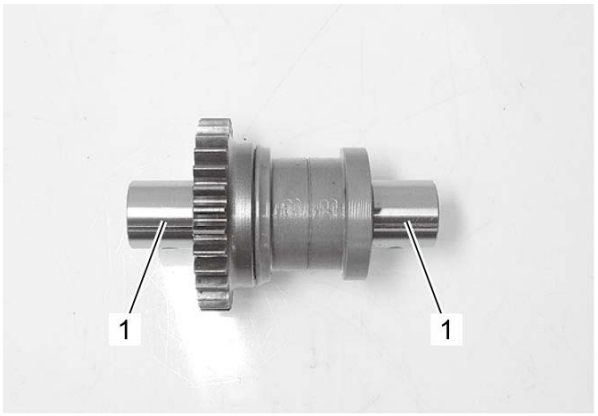

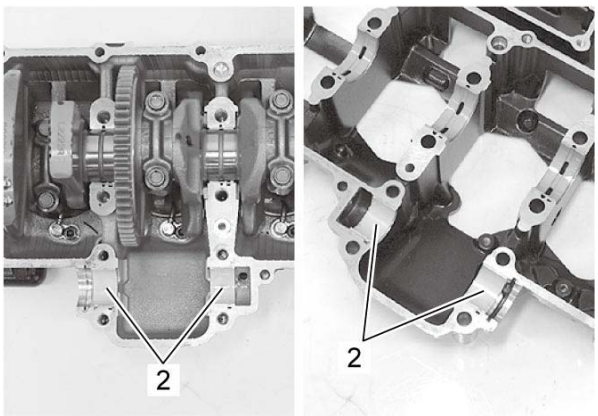

2) Set the balancer shaft so that its punch mark (1) is aligned with the index (2) on the crankshaft.

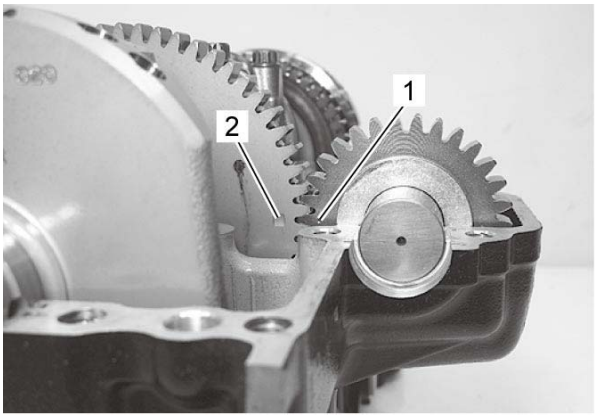

3) Install the new plug (1).

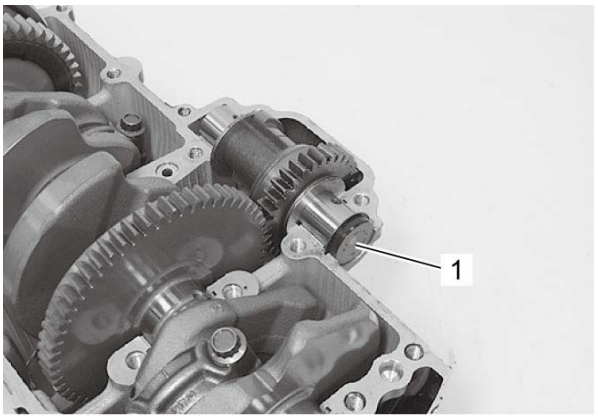

Middle Crankcase

1) Install the dowel pins (1) and new O-ring (2).

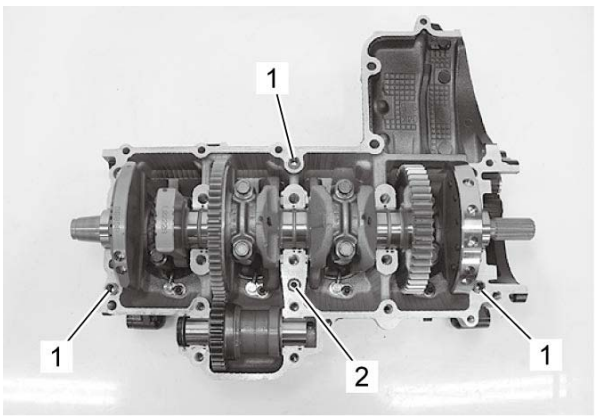

2) Clean the mating surfaces of the upper and middle crankcase halves. Apply sealant to the mating surface of the middle crankcase (1).

NOTE:
- **Make surfaces free from moisture, oil, dust and other foreign materials.**
- **Spread on surfaces thinly to form an even layer, and assemble the crankcases within a few minutes.**
- **Take extreme care not to apply sealant to any oil hole, oil groove and bearing.**
- **Apply sealant to distorted surfaces as it forms a comparatively thick film.**

"A": Sealant 99000–31140 (SUZUKI BOND 1207B)

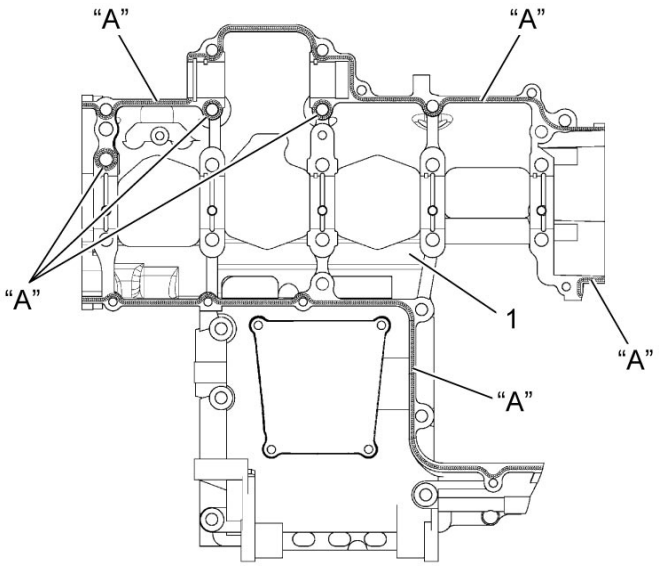

3) Match the upper and middle crankcases.

4) Tighten the crankcase middle bolts (M9) (1). Tighten each bolt a little at a time to equalize the pressure in following steps.

NOTE:
The ascending order of numbers are indicated on the middle crankcase.

Tightening torque

Crankcase middle bolt (M9) (a): 18 N·m (1.8 kgf-m, 13.5 lbf-ft) → turn clock wise 50°

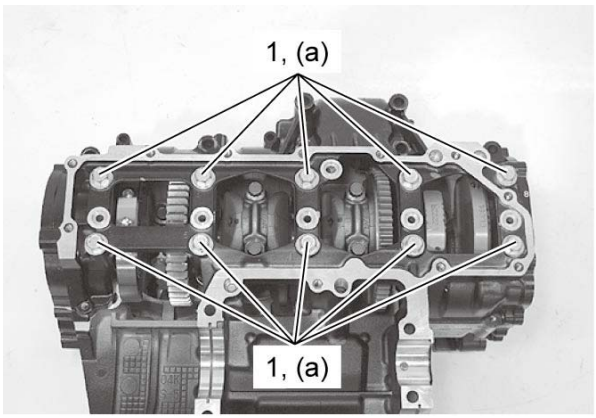

5) Install the crankcase middle bolts (M8) (1) with under cowling bracket (2).

6) Tighten the crankcase middle bolts (M8) (1) and (3) to the specified torque in the following two steps.

Tightening torque

Crankcase middle bolt (M8) (a): 15 → 26 N·m (1.5 → 2.7 kgf-m, 11.0 → 19.5 lbf-ft)

7) Tighten the crankcase middle bolts (M6) (4) to the specified torque.

Tightening torque

Crankcase middle bolt (M6) (b): 11 N·m (1.1 kgf-m, 8.5 lbf-ft)

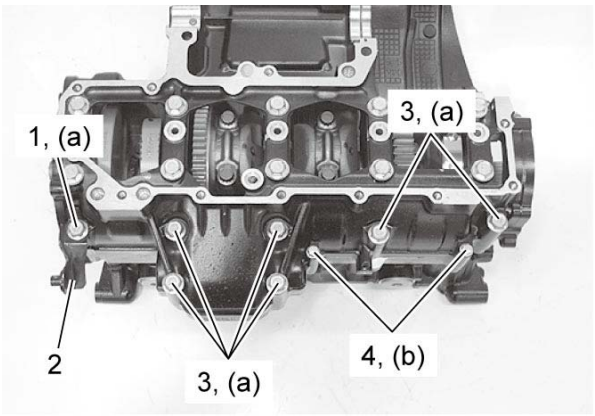

8) Install the new gasket washer to the crankcase upper bolt (M6) (1).

9) Tighten the crankcase upper bolts (M6) (1) and (2) to the specified torque.

Tightening torque

Crankcase upper bolt (M6) (a): 11 N·m (1.1 kgf-m, 8.5 lbf-ft)

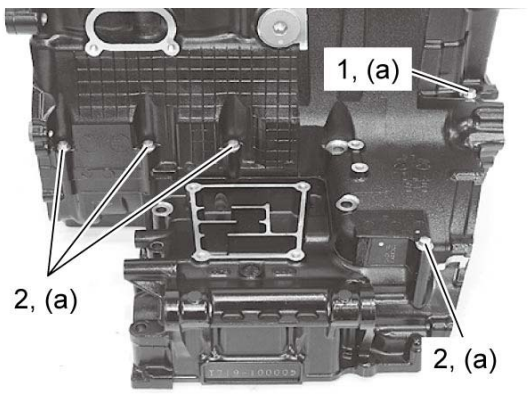

Transmission

Install the transmission. ☞

Lower Crankcase

1) Install the dowel pins (1) and new O-rings (2).

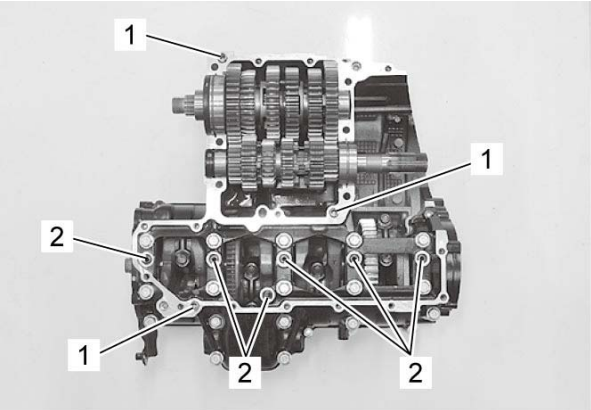

2) Clean the mating surfaces of lower and middle crankcase halves. Apply sealant to the mating surface of the lower crankcase (1) and middle crankcase (2).

NOTE:
- **Make surfaces free from moisture, oil, dust and other foreign materials.**
- **Spread on surfaces thinly to form an even layer, and assemble the crankcases within few minutes.**
- **Take extreme care not to apply any sealant to the oil hole, oil groove and bearing.**
- **Apply to distorted surfaces as it forms a comparatively thick film.**

"A": Sealant 99000–31140 (SUZUKI BOND 1207B)

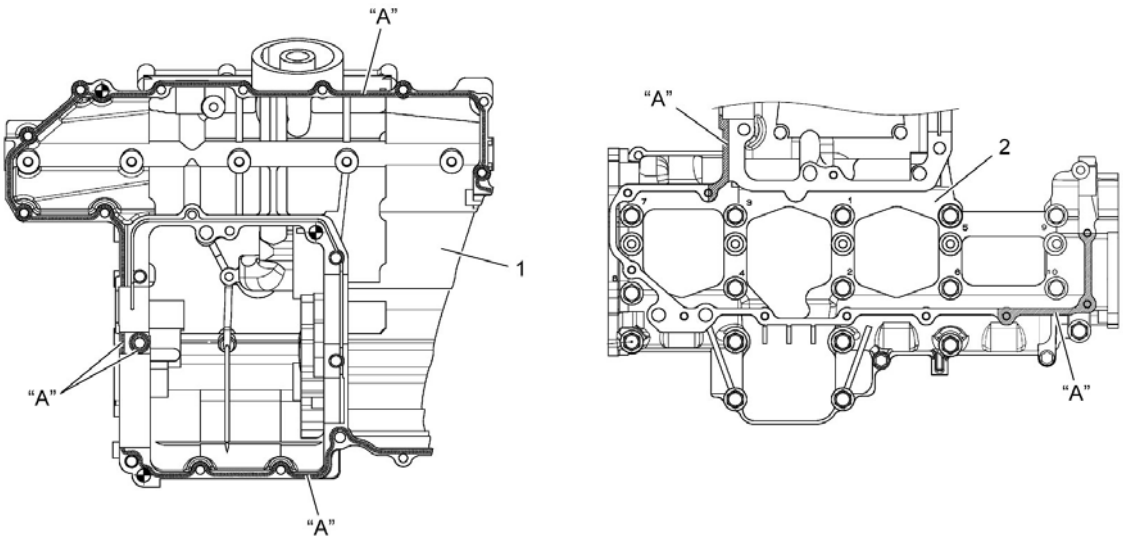

3) Match the middle and lower crankcase.

NOTE:
Align each gearshift fork (1) with its groove (2).

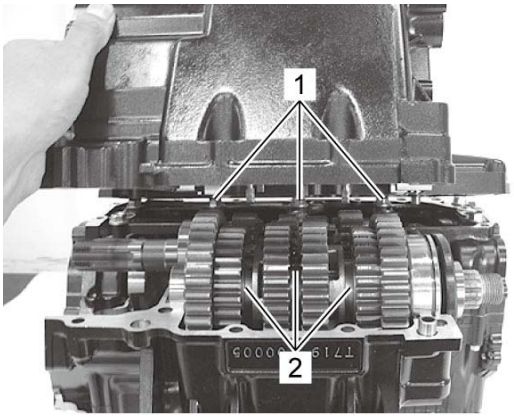

4) Install the new gaskets to the crankcase lower bolts (M6) (1).

5) Tighten the crankcase lower bolts (M6) (1) and (2) to the specified torque.

Tightening torque

Crankcase lower bolt (M6) (a): 11 N·m (1.1 kgf-m, 8.5 lbf-ft)

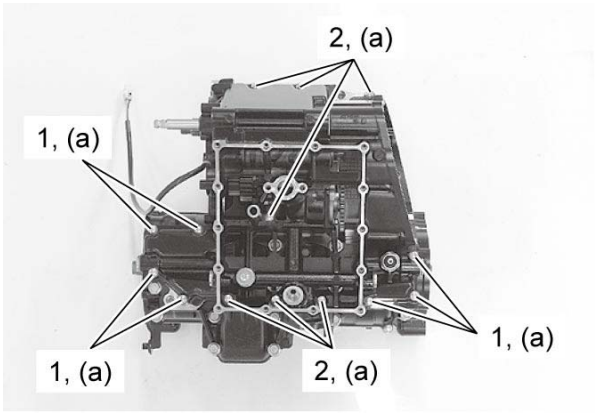

6) Install the new gaskets to the crankcase upper bolts (M8) (1) and crankcase middle bolt (M8) (2).

7) Tighten the bolts (1), (2) and (3) to the specified torque in the following two steps.

Tightening torque

Crankcase upper bolt (M8) (a): 15 → 26 N·m (1.5 → 2.7 kgf-m, 11.0 → 19.5 lbf-ft)
Crankcase middle bolt (M8) (b): 15 → 26 N·m (1.5 → 2.7 kgf-m, 11.0 → 19.5 lbf-ft)

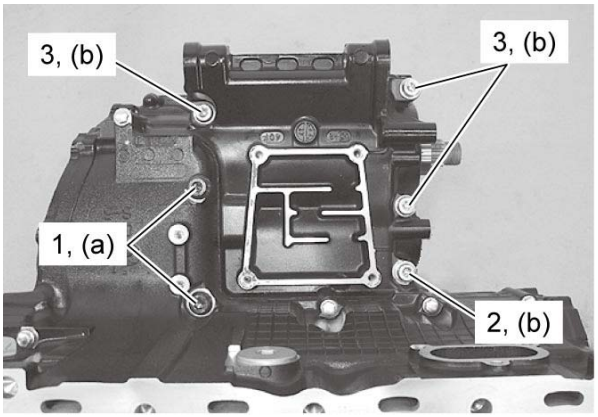

8) After crankcase bolts have been tightened, check that the crankshaft rotates smoothly.
9) Also check that the driveshaft and countershaft rotate smoothly.

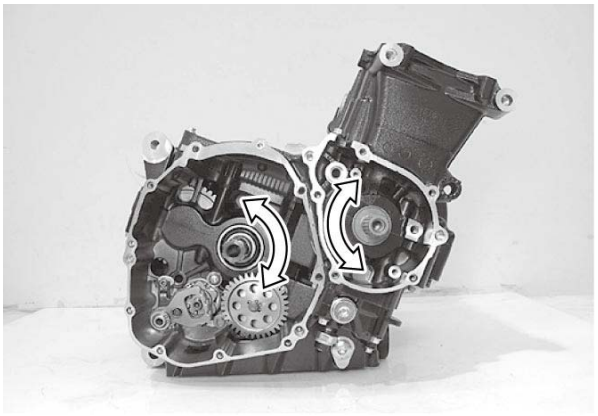

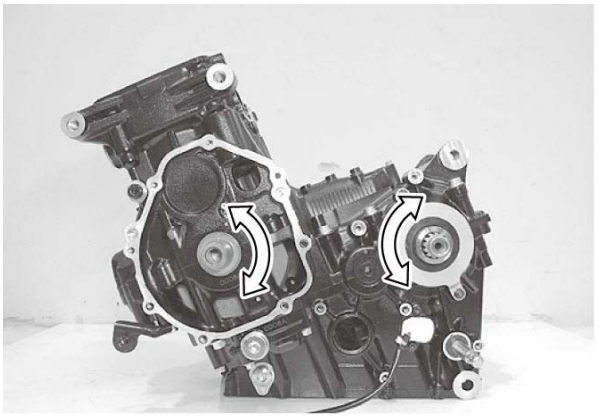

10) Install the driveshaft oil seal retainer (1).
11) Apply thread lock to the bolts (2) and tighten them to the specified torque.

“A”: Thread lock cement 99000–32150 (THREAD LOCK CEMENT 1322D)

Tightening torque

Driveshaft oil seal retainer bolt (a): 10 N·m (1.0 kgf-m, 7.5 lbf-ft)

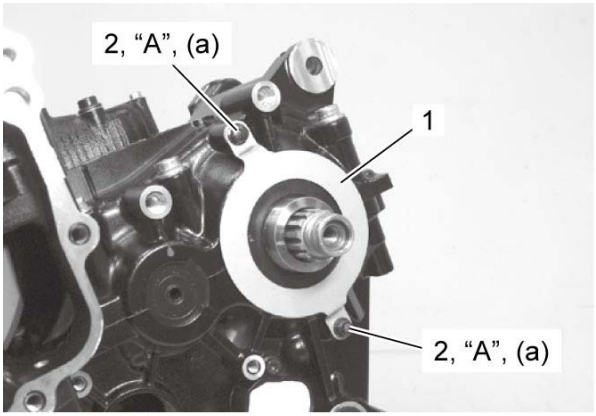

Oil Strainer

Install the oil strainer and oil gallery pipe. ☞

Oil Pan

Install the new gasket and oil pan. ☞

Oil Cooler / Oil Filter

Install the oil cooler and oil filter. Refer to ***Oil Cooler Removal and Installation*** and ***Oil Filter Replacement***.

Water Pump / Water Hose

1) Install the water pump assembly. ☞

2) Apply engine coolant to the new O-ring (1).

3) Tighten the water inlet connector mounting bolts (2) to the specified torque.

Tightening torque

Water inlet connector mounting bolt (a): 10 N·m (1.0 kgf-m, 7.5 lbf-ft)

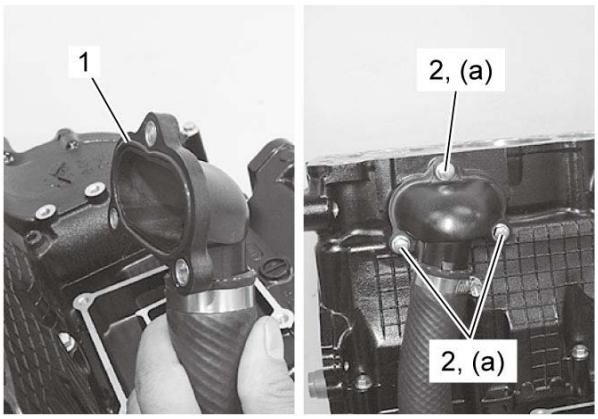

4) Install the oil cooler water inlet hose (1). ☞

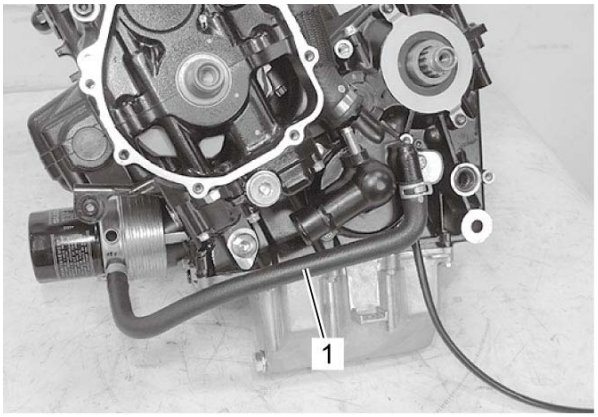

Generator

Install the generator rotor (1) and cover (2). Refer to ***Generator Installation***.

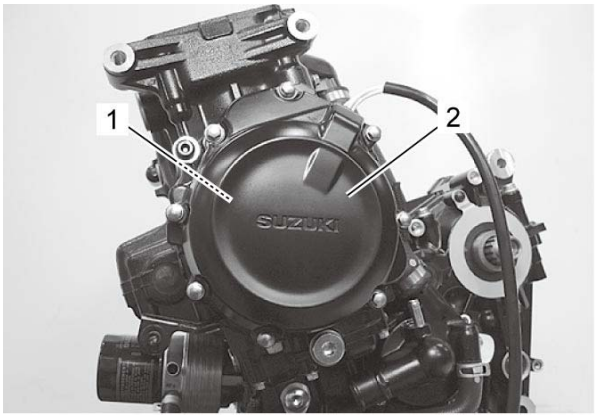

Clutch

Install the clutch component parts (1). ☞

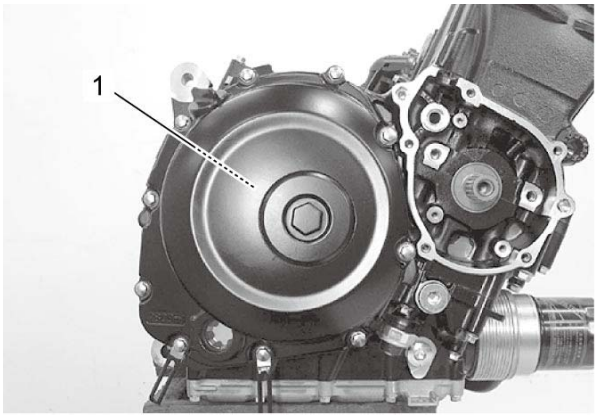

Cam Chain Drive Sprocket / CKP Sensor / Cam Chain / Cam Chain Tensioner / Cam Chain Guide No. 1

1) Install the cam chain drive sprocket (1).

NOTE:
When installing the cam chain drive sprocket, align the wide spline tooth (2) and (3).

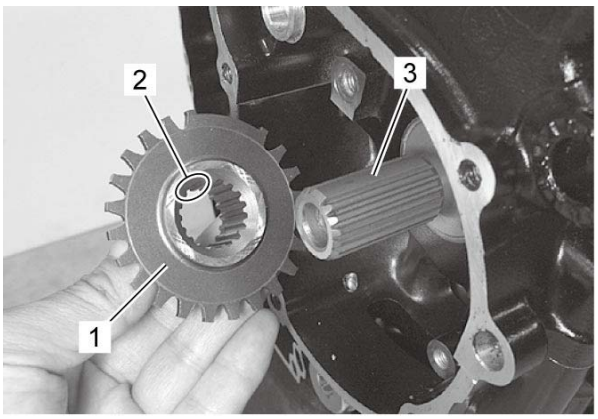

2) Install the cam chain (1).

3) Install the CKP sensor (2). ☞

4) Install the cam chain tensioner (3) and cam chain guide No. 1 (4). ☞

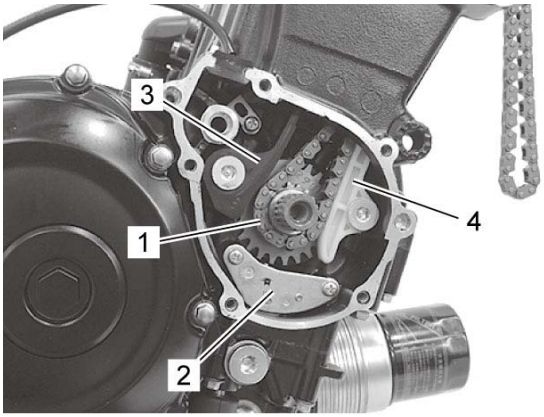

Starter Clutch / Starter Idle Gear

Install the starter clutch and starter idle gear No. 1, No. 2. ☞

Starter Motor

Install the starter motor. ☞

Crankcase Breather (PCV) Cover

Install the crankcase breather (PCV) cover. ☞

Cylinder Head

Install the cylinder head assembly. ☞

Balancer Shaft Assembly / Crankshaft / Piston / Cylinder Removal

Refer to ***Engine Assembly Removal*** and ***Cylinder Head Removal***.

Crankcase Breather (PCV) Cover

Remove the crankcase breather (PCV) cover. ☞

Starter Motor

Remove the starter motor. ☞

Starter Idle Gear / Starter Clutch

Remove the starter idle gear No. 1, No. 2 and starter clutch. ☞

Cam Chain Guide No. 1 / Cam Chain Tensioner / Cam Chain / CKP Sensor / Cam Chain Drive Sprocket

1) Remove the cam chain guide No. 1 (1). ☞

2) Remove the cam chain tensioner (2). ☞

3) Remove the cam chain (3).

4) Remove the CKP sensor (4). ☞

5) Remove the cam chain drive sprocket (5).

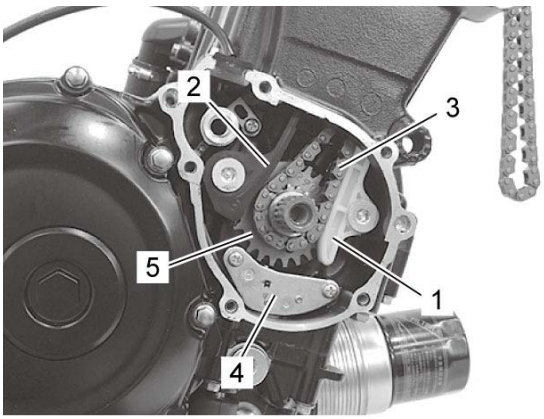

Clutch

Remove the clutch component parts (1). ☞

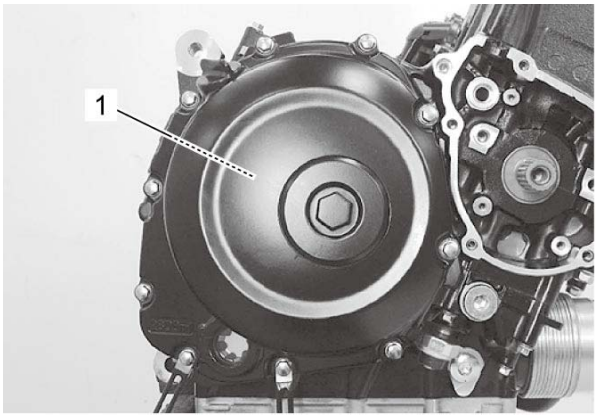

Generator

Remove the generator cover (1) and rotor. Refer to ***Generator Removal***.

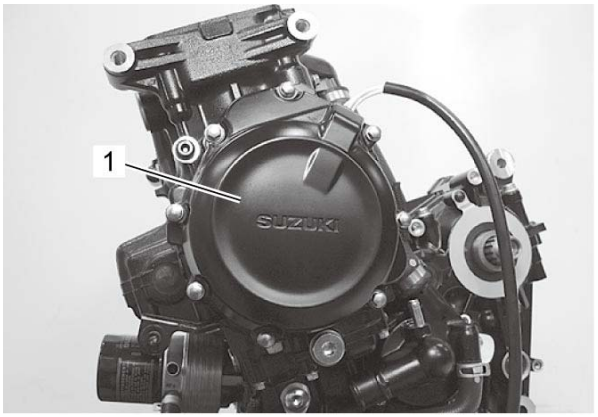

Water Hose / Water Pump

1) Remove the oil cooler water inlet hose (1).

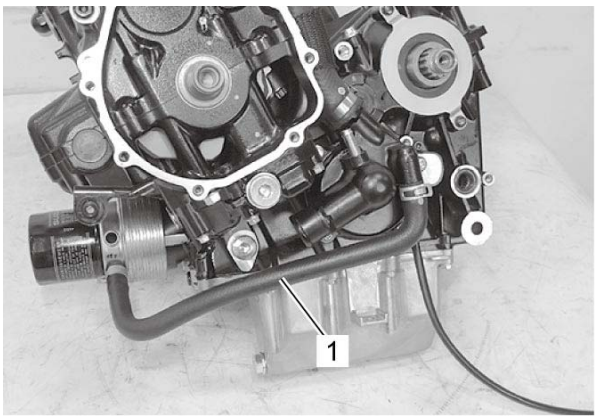

2) Remove the water inlet connector (1).

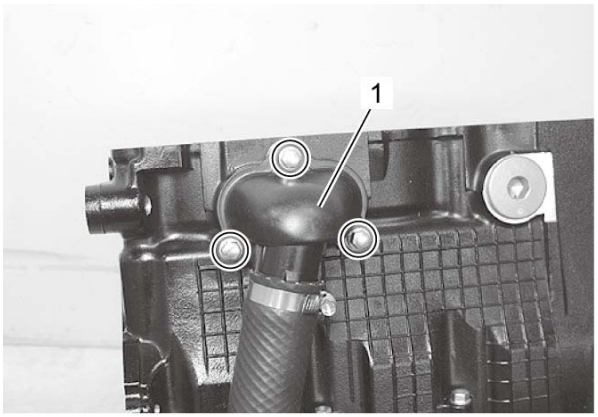

3) Remove the water pump. ☞

Oil Filter / Oil Cooler

1) Remove the oil filter. ☞

2) Remove the oil cooler. ☞

Oil Pan

Remove the oil pan (1) and gasket (2). ☞

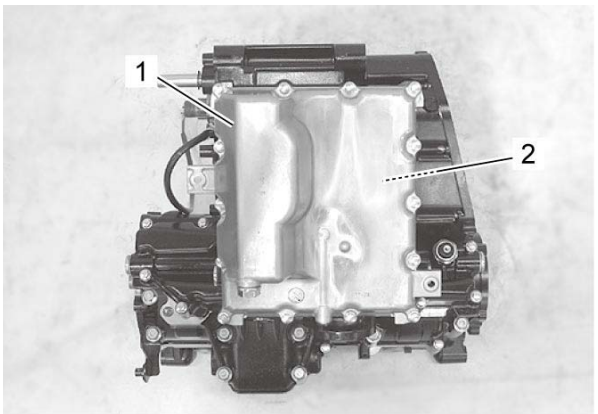

Oil Strainer

Remove the oil strainer and oil gallery pipe. ☞

Lower Crankcase

1) Remove the driveshaft oil seal retainer (1).

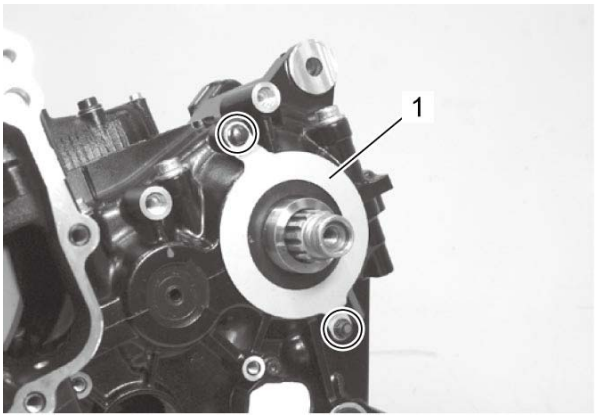

2) Remove the crankcase lower bolts (M6) (1).

NOTE:
Loosen the crankcase bolts diagonally and smaller size ones first.

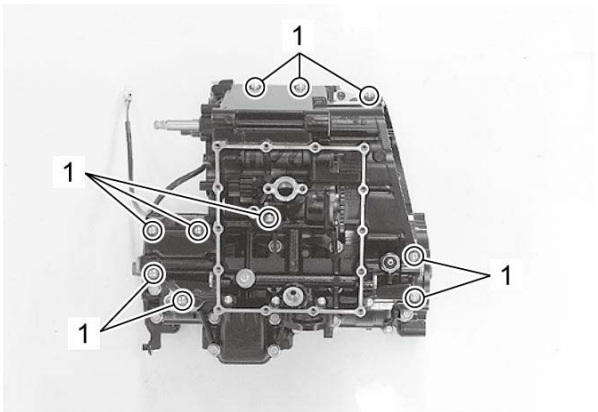

3) Remove the crankcase upper bolts (M8) (1) and crankcase middle bolts (M8) (2).

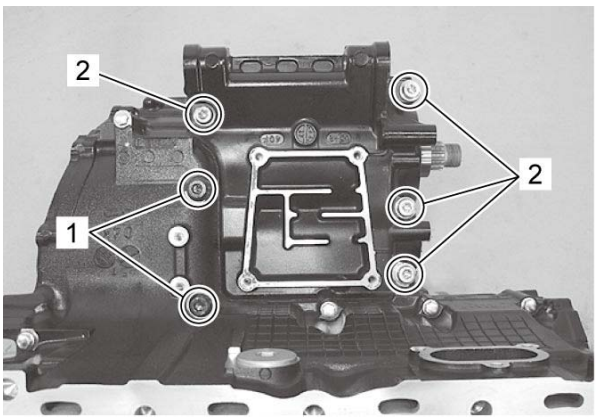

4) Make sure that all of the bolts are removed. Then, tap the sides of the lower crankcase using a plastic hammer to separate the middle and lower crankcase halves and then lift the lower crankcase off the middle crankcase.

5) Remove the dowel pins (1) and O-rings (2).

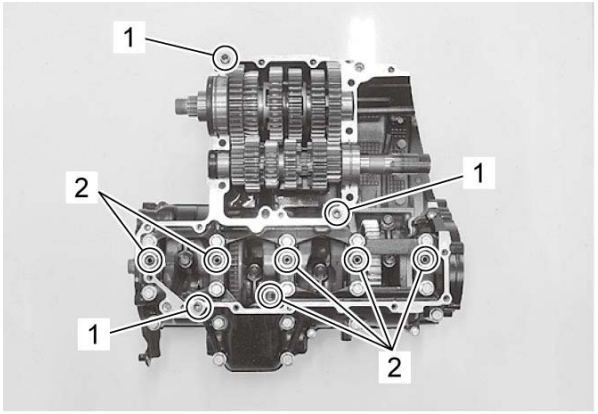

Transmission

1) Remove the driveshaft assembly (1) and countershaft assembly (2). ☞

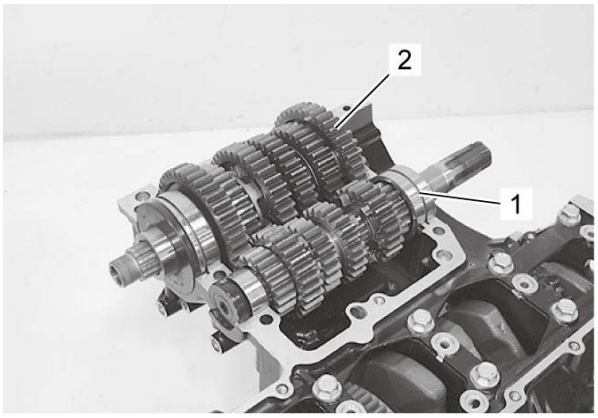

2) Remove the pins (1) and C-rings (2).

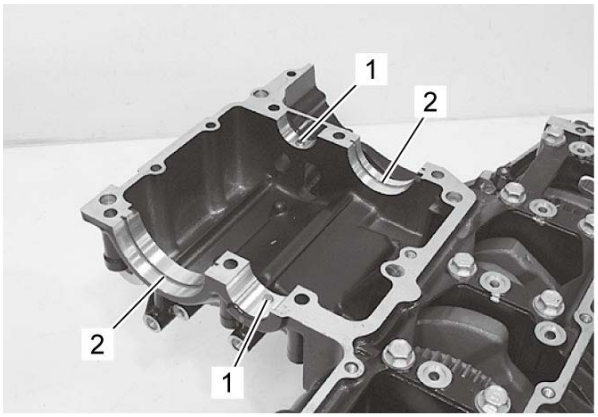

Middle Crankcase

1) Remove the crankcase upper bolts (M6) (1).

2) Remove the crankcase middle bolts (M6) (2), crankcase middle bolts (M8) (3) and crankcase middle bolts (M9) (4).

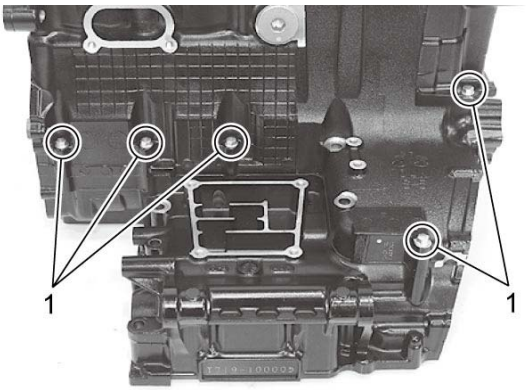

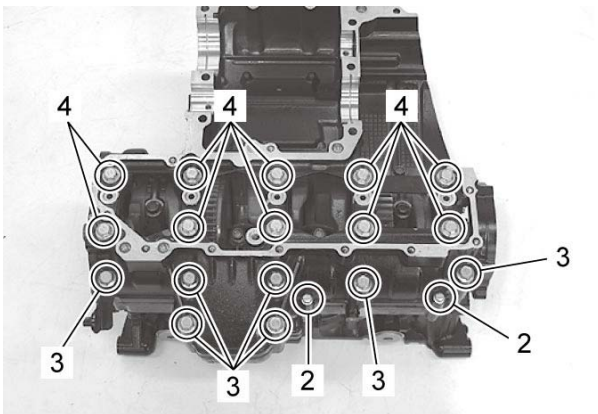

3) Remove the dowel pins (1) and O-ring (2).

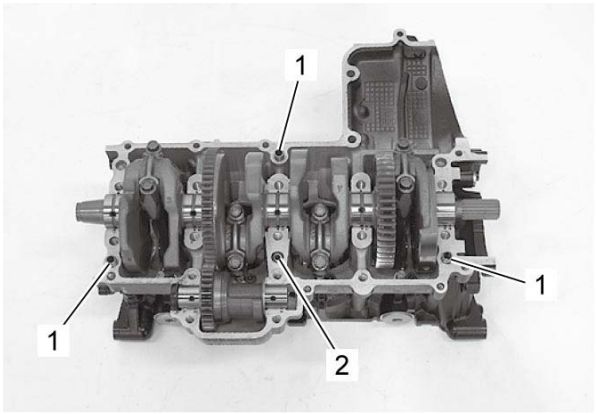

Balancer Shaft

Remove the balancer shaft assembly (1) and plug (2).

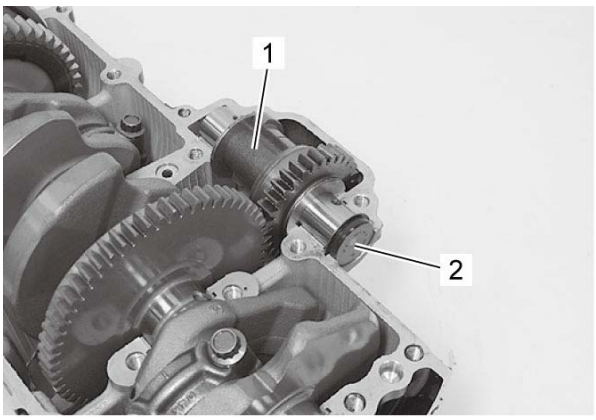

Crankshaft

1) Loosen the conrod cap bolts (1).

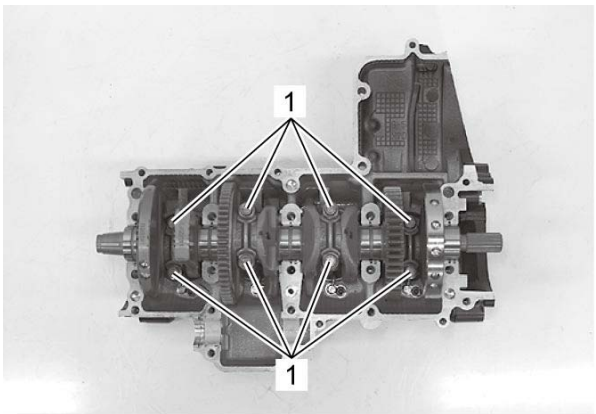

2) Remove the conrod caps (1) by tapping the bolts (2) lightly with a plastic hammer.

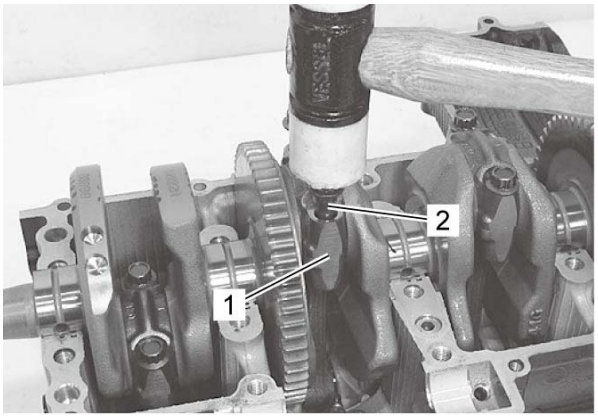

3) Remove the crankshaft (1) and thrust bearings (2).

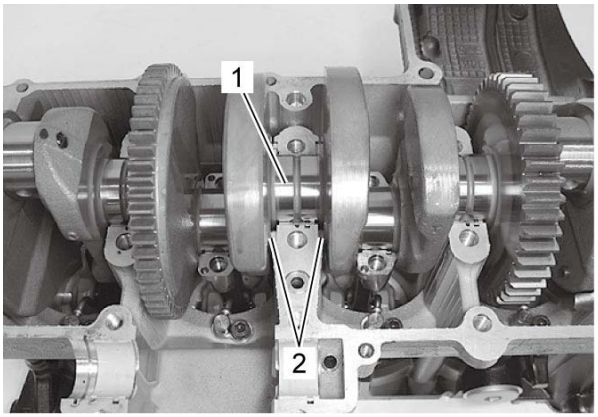

Piston Cooling Jet

Remove the piston cooling jets (1). ☞

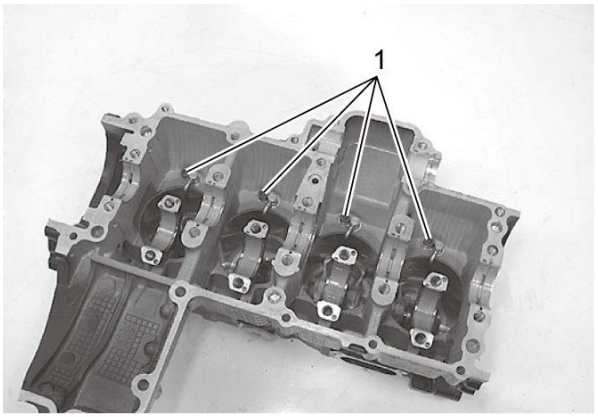

Piston / Conrod

1) Push the conrod to cylinder head side and remove the piston and conrod from the upper crankcase.

NOTICE:
Be careful not to damage the cylinder wall by the conrod.

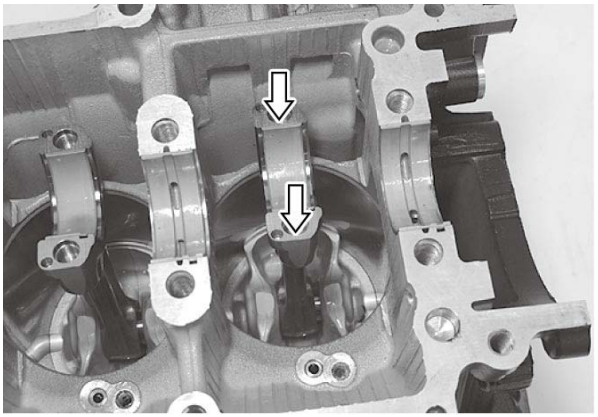

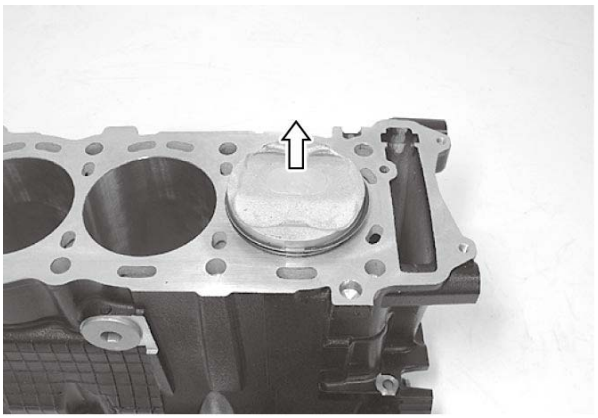

2) Remove the piston pin circlip (1).



3) Draw out the piston pin (1) and piston (2).

NOTE:
Scribe the cylinder number on the piston head.

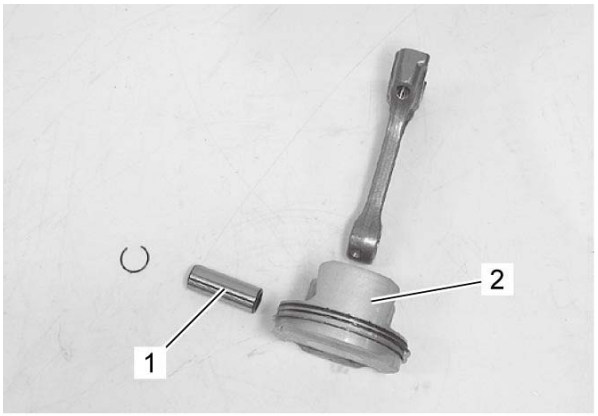

Balancer Shaft Disassembly and Reassembly

Refer to ***Balancer Shaft Assembly / Crankshaft / Piston / Cylinder Removal***.
Refer to ***Balancer Shaft Assembly / Crankshaft / Piston / Cylinder Installation***.

Disassembly

Remove the washers (1), balancer gear (2) and dampers (3).

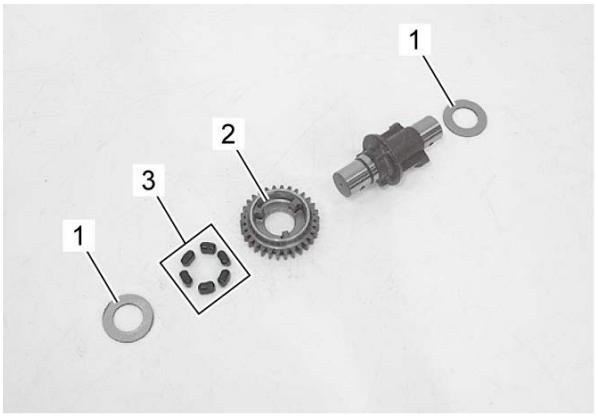

Reassembly

Reassembly is in the reverse order of disassembly. Pay attention to the following points:

- Apply engine oil to each part “A”.

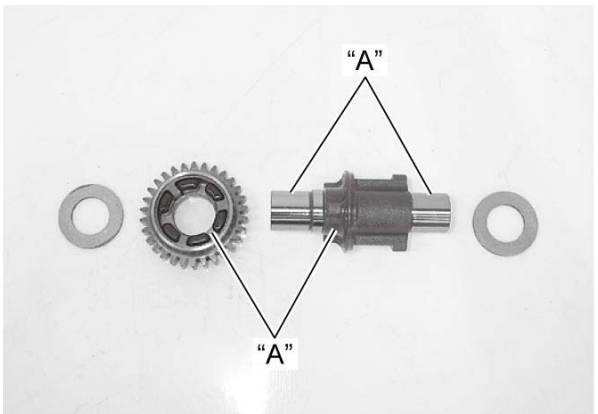

- Set the dampers and install the balancer shaft to balancer gear.

NOTE:

- **Fit the stopper of the balancer shaft between the dampers.**
- **Align the line (1) on the balancer shaft with the punch (2) on the balancer gear.**

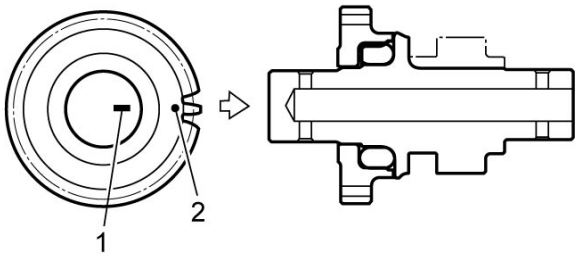
1
2

Balancer Shaft Inspection

Refer to ***Balancer Shaft Disassembly and Reassembly***.

Balancer Shaft

Inspect the balancer shaft for wear or damage. Replace the balancer shaft if there is anything unusual.

Damper

Inspect the dampers for wear and damage, replace them if any defects are found.



Balancer Shaft Journal Bearing Inspection and Selection

Refer to ***Balancer Shaft Assembly / Crankshaft / Piston / Cylinder Removal*** and ***Balancer Shaft Assembly / Crankshaft / Piston / Cylinder Installation***.

Inspection

Inspect the bearing surfaces (1) for any signs of fusion, pitting, burn or flaws. If any, replace them with a specified set of bearings.

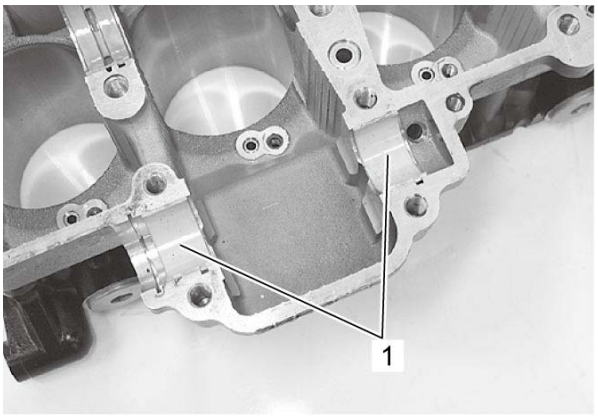

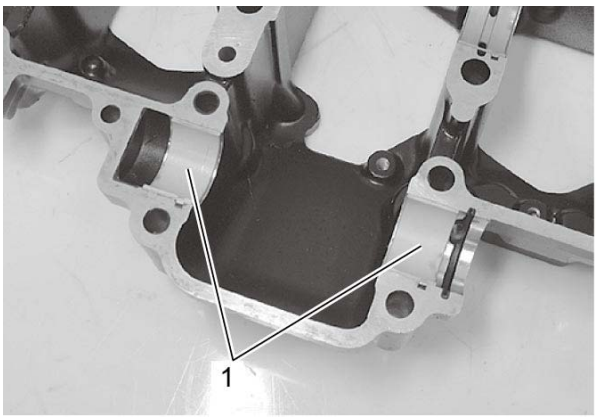

Selection

1) Place the plastigauge axially along the balancer shaft journal as shown.

Special Tool

(A): 09900–22301

NOTICE:
Never rotate the balancer shaft when a piece of plastigauge is installed.

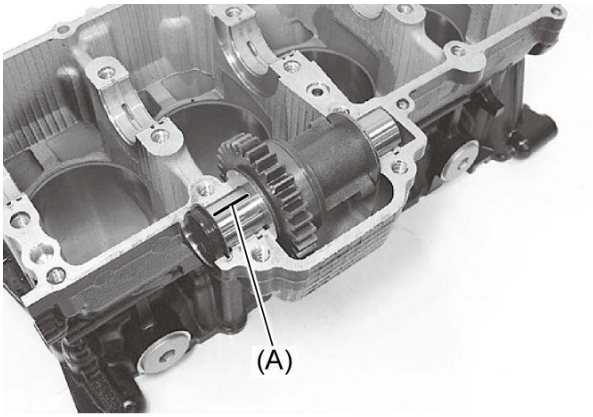

2) Mate the middle crankcase with the upper crankcase, and tighten each crankcase bolt to the specified torque.

Tightening torque

Crankcase middle bolt (M9) (a): 18 N·m (1.8 kgf-m, 13.5 lbf-ft) → turn clockwise 50°
Crankcase middle bolt (M8) (b): 15 → 26 N·m (1.5 → 2.7 kgf-m, 11.0 → 19.5 lbf-ft)
Crankcase middle bolt (M6) (c): 11 N·m (1.1 kgf-m, 8.5 lbf-ft)
Crankcase upper bolt (M6) (d): 11 N·m (1.1 kgf-m, 8.5 lbf-ft)

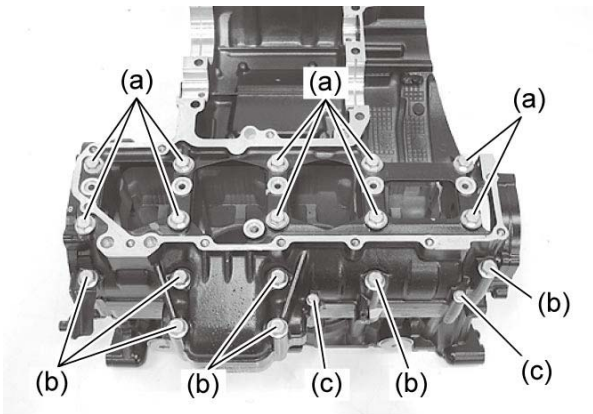

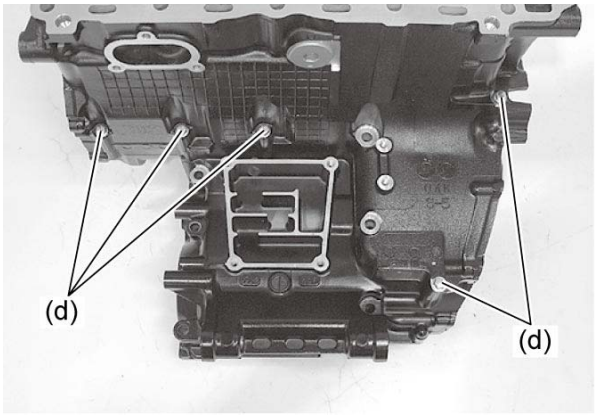

3) Remove the middle crankcase and measure the width of the compressed plastigauge using the envelope scale. This measurement should be taken at the widest part of the compressed plastigauge. If the oil clearance exceeds the service limit, select the specified bearings from the bearing selection table.

Balancer journal oil clearance

[Standard]: 0.028 – 0.052 mm (0.0011 – 0.0020 in)
[Limit]: 0.080 (0.0031 in)

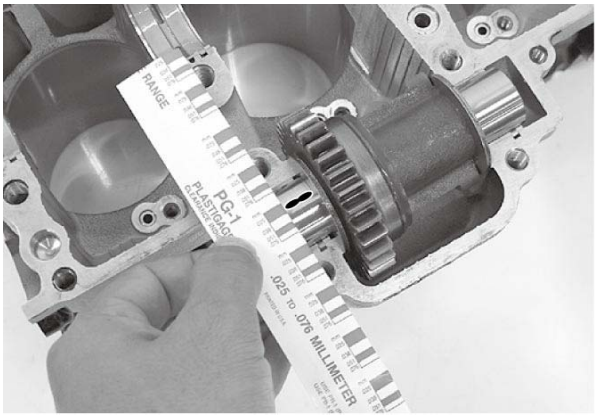

4) Check the corresponding crankcase journal I.D. codes (1), [A] or [B] which is stamped on the rear of upper crankcase.

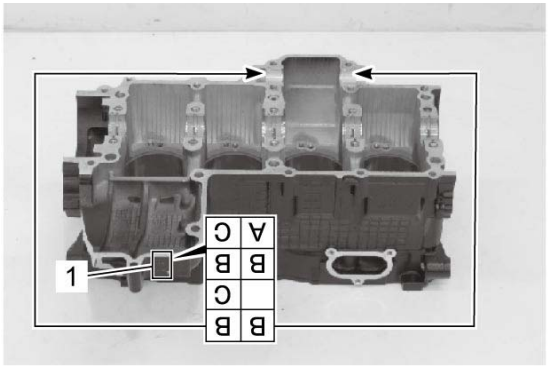

5) Check the corresponding balancer shaft journal O.D. codes (1), [A] or [B] which is stamped on the balancer shaft.

Balancer journal O.D.

[Standard]: 22.976 – 22.992 mm (0.9046 – 0.9051 in)

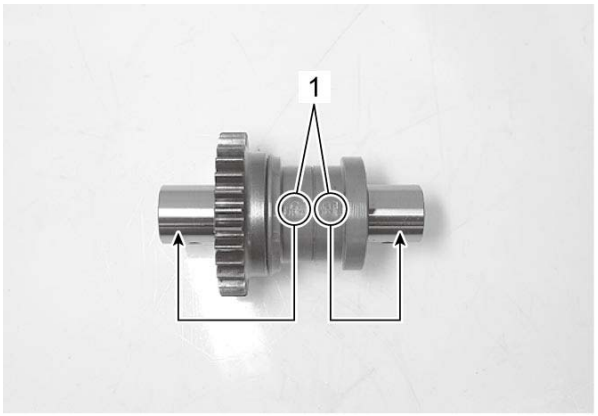

Bearing selection table

		Balancer shaft journal O.D.	
	Code	A	B
Crankcase I.D.	A	Green	Black
	B	Black	Brown

Crankcase I.D. specification

Code	I.D. specification
A	26.000 – 26.008 mm (1.0237 – 1.0239 in)
B	26.008 – 26.016 mm (1.0239 – 1.0243 in)

Balancer shaft journal O.D. specification

Code	O.D. specification
A	22.984 – 22.992 mm (0.9049 – 0.9051 in)
B	22.976 – 22.984 mm (0.9046 – 0.9049 in)

Special Tool

(A): 09912–66310

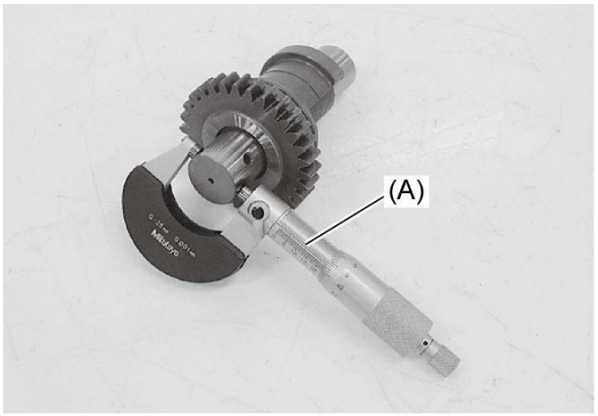

Bearing thickness specification

Color (Part No.)	Thickness
Green (12229-40F5-0A0)	1.486 – 1.490 mm (0.0586 – 0.0587 in)
Black (12229-40F5-0B0)	1.490 – 1.494 mm (0.0587 – 0.0588 in)
Brown (12229-40F5-0C0)	1.494 – 1.498 mm (0.0588 – 0.0589 in)

NOTE:
The balancer shaft journal bearings on upper and middle crankcases are the same.



Balancer Shaft Journal Bearing Removal and Installation

Refer to ***Balancer Shaft Assembly / Crankshaft / Piston / Cylinder Removal*** and ***Balancer Shaft Assembly / Crankshaft / Piston / Cylinder Installation***.

Removal

Remove the balancer shaft journal bearings (1).

NOTICE:
- **When removing the balancer shaft journal bearings, be careful not to scratch the crankcase and the balancer shaft journal bearings.**
- **Do not touch the bearing surfaces with your hands. Grasp the bearings by their edges.**

NOTE:
- **Do not remove the bearings (1) unless absolutely necessary.**
- **Make a note of where the bearings are removed from so that they can be reinstalled in their original positions.**

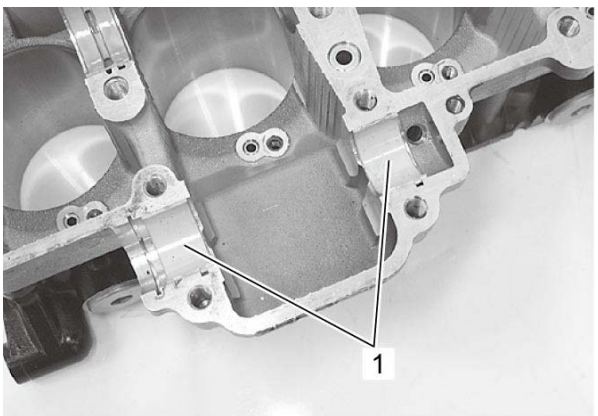

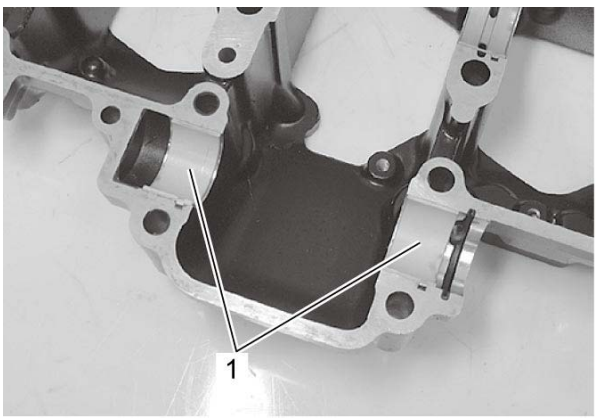

Installation

Reference: Balancer Shaft Journal Bearing Inspection and Selection

When installing the bearings to the crankcases, be sure to install the tab (1) first, and then press in the

other opposite side of the bearing.

NOTE:
Inspect and select the balancer shaft journal bearing if necessary. Refer to *Balancer Shaft Journal Bearing Inspection and Selection*.

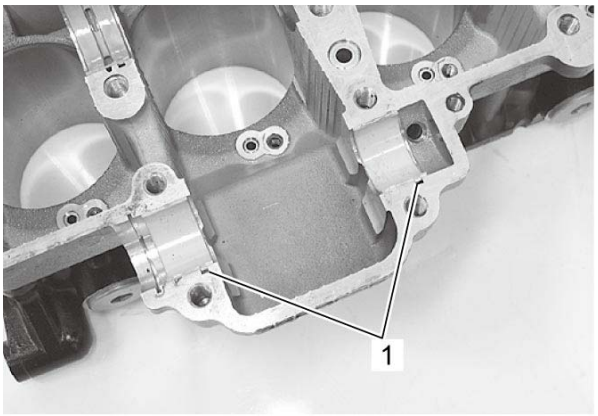

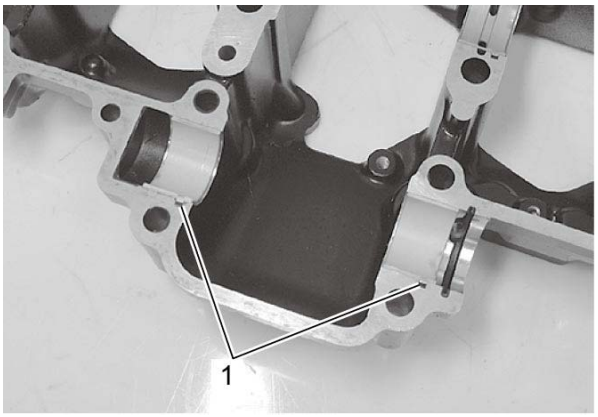

Cam Chain Guide / Cam Chain Tensioner Removal and Installation

Removal

Cam chain guide No. 2

1) Remove the cylinder head cover. ☞
2) Remove the cam chain guide No. 2 (1).

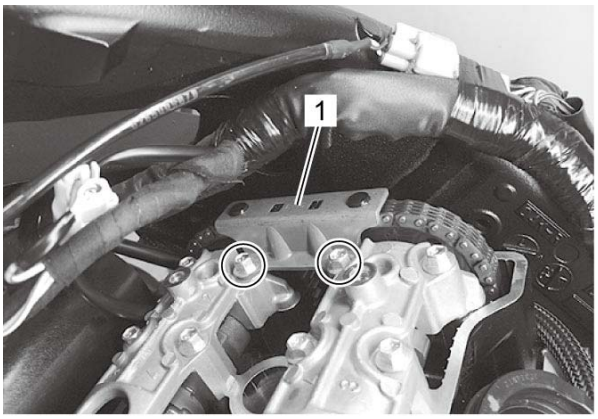

Cam chain guide No. 1 / cam chain tensioner

1) Remove the cylinder head. ☞
2) Remove the starter clutch. ☞
3) Remove the cam chain guide No. 1 (1) and cam chain tensioner (2).

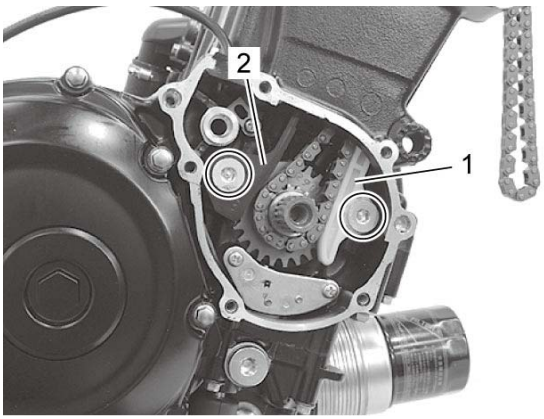

Installation

Reference: Cam Chain Guide Inspection
Reference: Cam Chain Tensioner Inspection

Cam chain guide No. 1 / cam chain tensioner

1) Insert the cam chain tensioner (1).

2) Apply a small quantity of thread lock to the cam chain tensioner bolt (2) and tighten it to the specified torque.

"A": Thread lock cement 99000–32150 (THREAD LOCK CEMENT 1322D)

Tightening torque

Cam chain tensioner bolt (a): 23 N·m (2.3 kgf-m, 17.0 lbf-ft)

3) Insert the cam chain guide No. 1 (3).

4) Apply a small quantity of thread lock to the cam chain guide No. 1 bolt (4) and tighten it.

"A": Thread lock cement 99000–32150 (THREAD LOCK CEMENT 1322D)

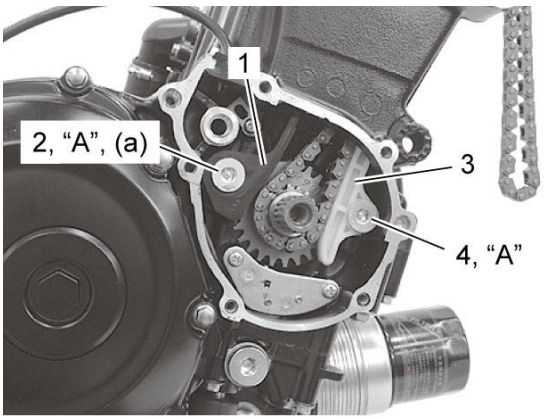

5) Install the starter clutch. ☞

6) Install the cylinder head. ☞

Cam chain guide No. 2

1) Install the cam chain guide No. 2 (1).

2) Tighten the camshaft journal holder bolts (2) to the specified torque.

Tightening torque

Camshaft journal holder bolt (a): 10 N·m (1.0 kgf-m, 7.5 lbf-ft)

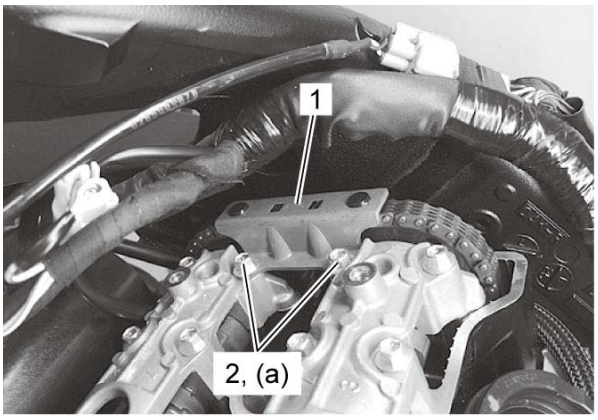

3) Install the cylinder head cover. ☞

Cam Chain Guide Inspection

Refer to ***Cam Chain Guide / Cam Chain Tensioner Removal and Installation***.
Check the contacting surface of the cam chain guides. If it is worn or damaged, replace it with a new one.



Cam Chain Tension Adjuster / Camshaft Installation

Reference: Camshaft Inspection
Reference: Cam Chain Tension Adjuster Inspection

1) Apply engine oil to the camshaft journals and cam faces.

NOTE:
Identify the camshafts according to the following embosses letters.
Intake camshaft (1): [A]
Exhaust camshaft (2): [B]

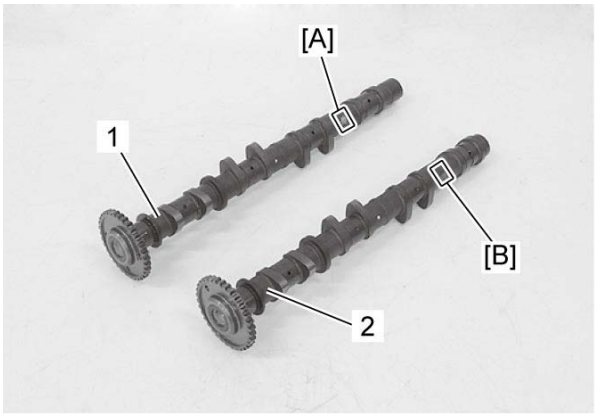

[A]:	IN	[B]:	EX

2) Turn the crankshaft clockwise and align the line (1) on the starter clutch to the slit (2) of cap hole thread while keeping the cam chain pulled upward.

NOTICE:
- **Pull the cam chain upward, or the chain will be caught between crankcase and cam drive sprocket.**
- **To adjust the camshaft timing correctly, be sure to align the line (1) with slit (2) and hold this position when installing the camshafts.**

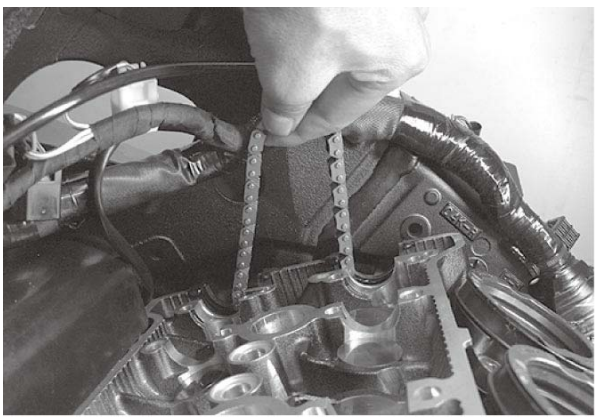

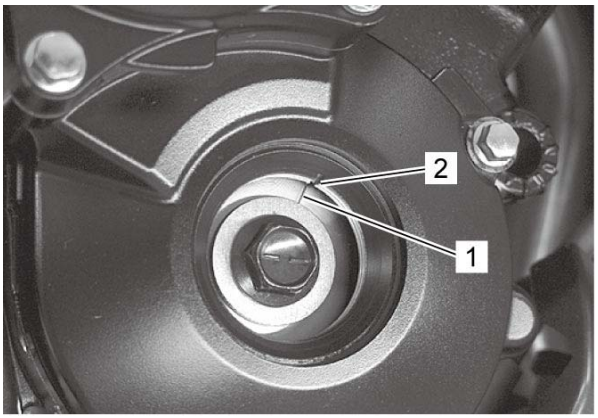

3) Pull the cam chain lightly.

4) Turn the exhaust camshaft so that the arrow is aligned with the gasket surface of the cylinder head.
(The exhaust camshaft sprocket has an arrow marked “1” (1).)

5) Engage the cam chain with the exhaust camshaft sprocket.

NOTE:
Before installing the camshaft, check that the tappets are installed correctly.

6) Bind the cam chain and the sprocket with a proper clamp (2) to prevent the cam chain disengagement while installing the camshaft journal holders.

7) The other arrow marked “2” (3) should now be pointing straight up. Starting from the roller pin that is directly above the arrow marked “2” (3), count out 14 roller pins (from the exhaust camshaft side going towards the intake camshaft side).

8) Engage the 14th roller pin on the cam chain with the arrow marked “3” (4) on the intake camshaft sprocket.

9) Bind the cam chain and the sprocket with a proper clamp (5) to prevent the cam chain disengagement while installing the camshaft journal holders.

NOTE:
The cam chain should now be on all three sprockets. Be careful not to move the crankshaft until the camshaft journal holders and cam chain tension adjuster are secured.

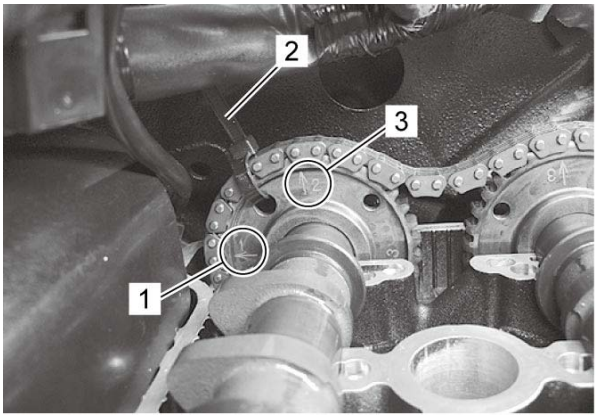
2
3
1

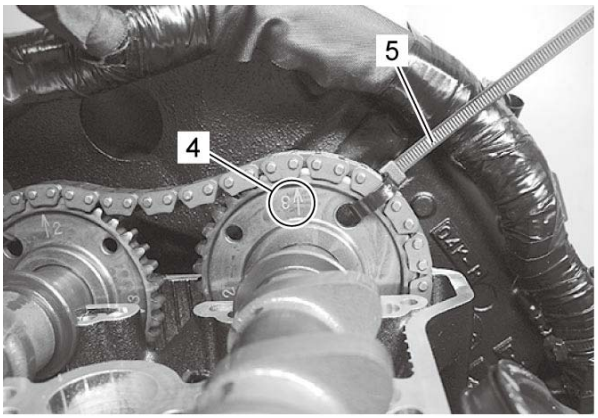
5
4

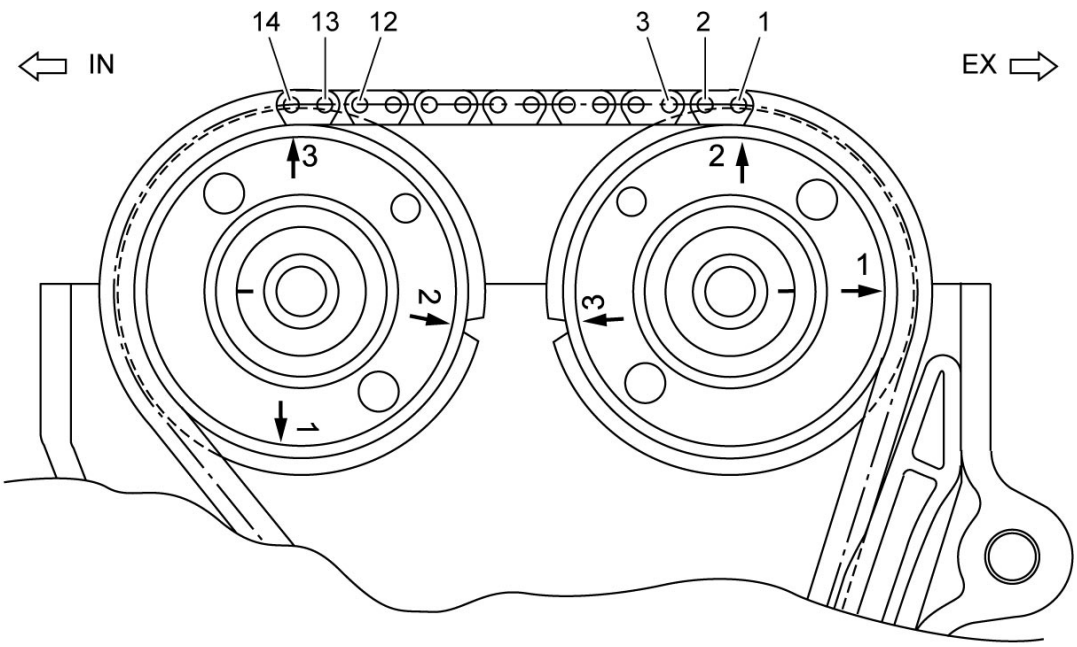
14
13
12
3
2
1
IN
EX
3
2
2
1
3
1

10) Install the dowel pins (1).

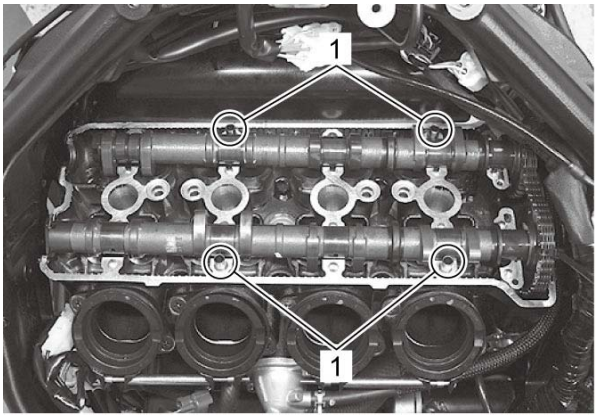

11) Install the camshaft journal holders (1) and cam chain guide No. 2 (2).

12) Have the camshaft journal holders seated evenly by tightening the camshaft journal holder bolts lightly, in the ascending order of numbers.

NOTICE:
Damage to head or camshaft journal holder thrust surfaces may result if the camshaft journal holders (1) are not drawn down evenly.

NOTE:
- **Each camshaft journal holder (1) is identified with a cast-on letters.**
- **The ascending order of numbers are indicated on the camshaft journal holders (1).**

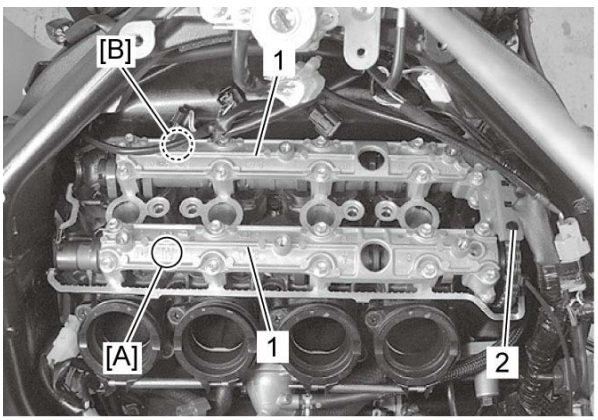

[A]:	IN	[B]:	EX

13) Tighten the camshaft journal holder bolts in ascending order of numbers to the specified torque.

Tightening torque

Camshaft journal holder bolt: 10 N·m (1.0 kgf-m, 7.5 lbf-ft)

NOTICE:
The camshaft journal holder bolts are made of a special material and much superior in strength, compared with other types of high strength bolts.
Take special care not to use other types of bolts.

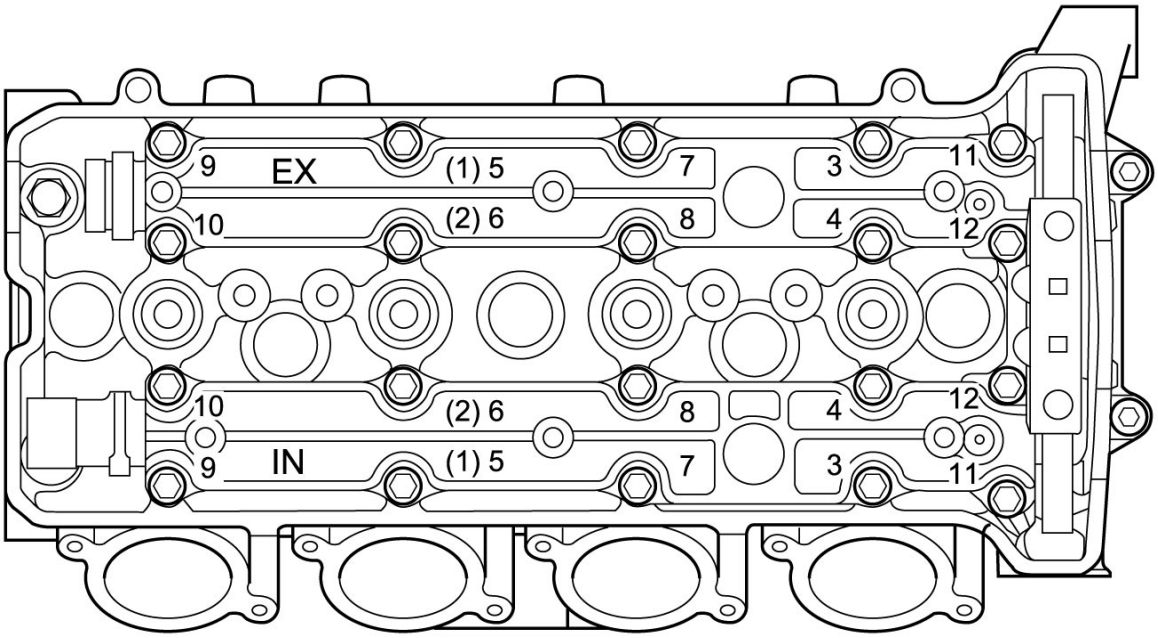

14) Remove the clamps (1).

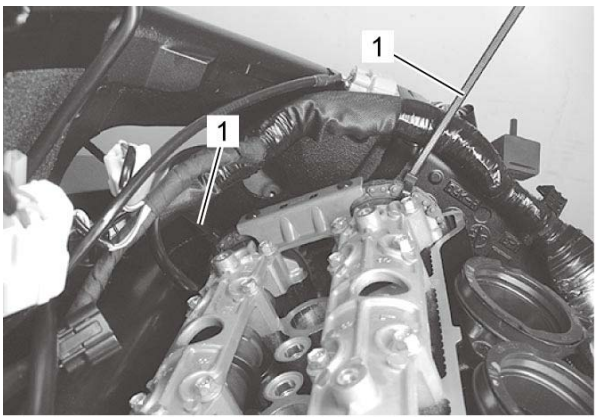

15) Push the stopper (1) and retract the push rod (2).

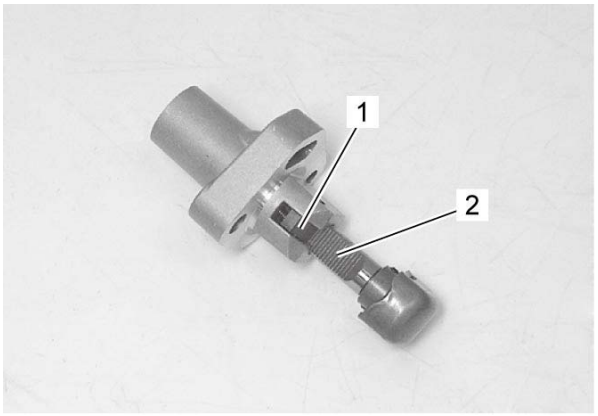

16) Fit a new gasket (1).

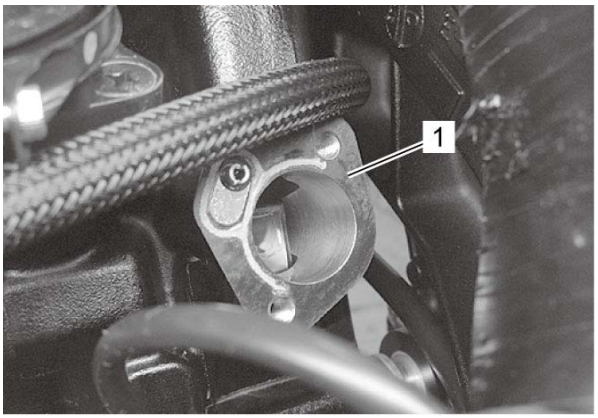

17) Install the cam chain tension adjuster (1) with “UP” mark (2) faced to the top of cylinder head.

Tightening torque

Cam chain tension adjuster bolt (a): 10 N·m (1.0 kgf-m, 7.5 lbf-ft)

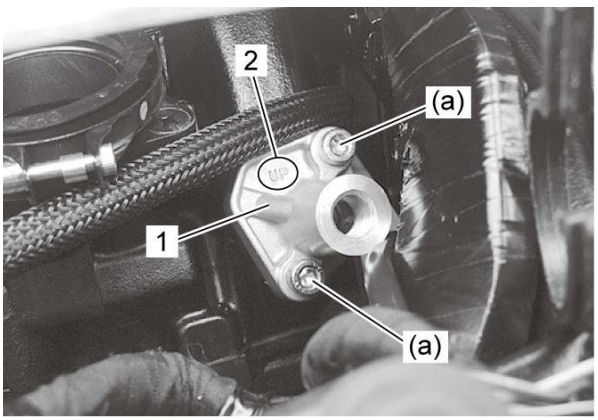

18) Install the spring (1).

19) Install the new gasket (2) and cam chain tension adjuster plug (3).

NOTE:
Click sound is heard when extending the push rod.

20) Tighten the cam chain tension adjuster plug (3) to the specified torque.

Tightening torque

Cam chain tension adjuster plug (a): 23 N·m (2.3 kgf-m, 17.0 lbf-ft)

NOTICE:
After installing the cam chain tension adjuster, check to be sure that the adjuster work properly by checking the slack of cam chain.

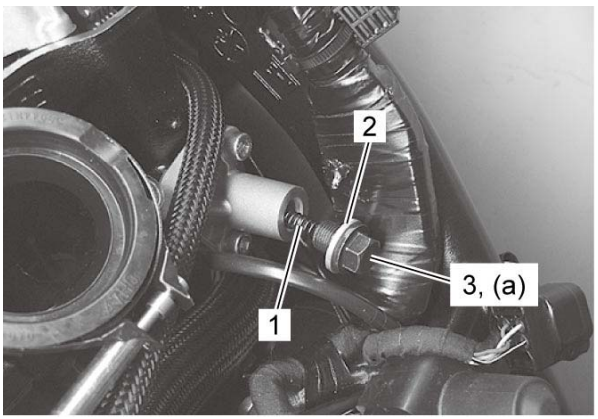

21) Rotate the crankshaft (some turns) and recheck the valve timing.

NOTICE:
Make sure that the adjuster works properly by checking no slack at point [A].

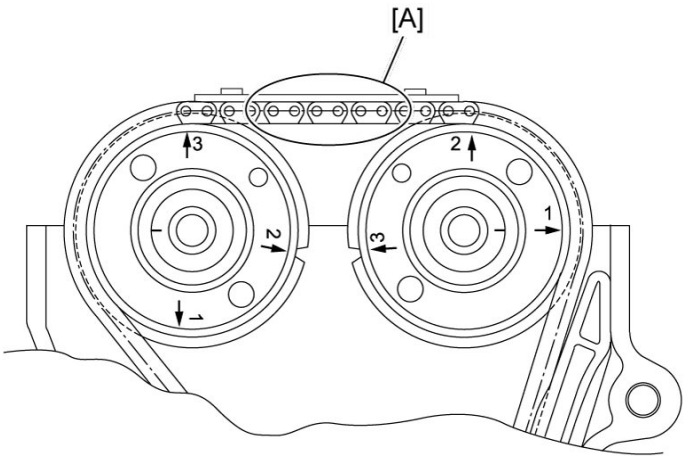

22) Check and adjust the valve clearance.

23) Install the new O-ring (1) and tighten the crankshaft hole plug (2) to the specified torque.

Tightening torque

Crankshaft hole plug (a): 11 N·m (1.1 kgf-m, 8.5 lbf-ft)

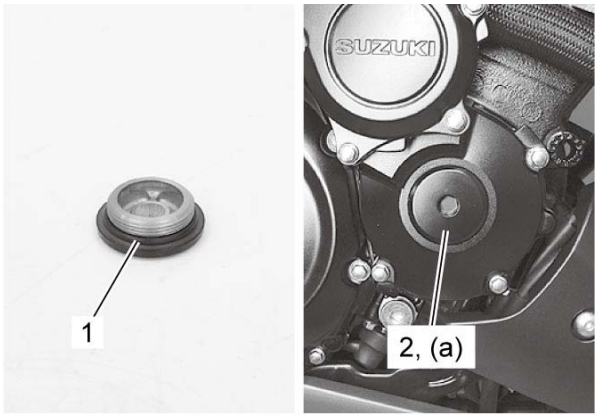

Cam Chain Tension Adjuster / Camshaft Removal

Refer to ***Cylinder Head Cover Removal and Installation***.

1) Remove the spark plugs.

2) Remove the crankshaft hole plug (1).

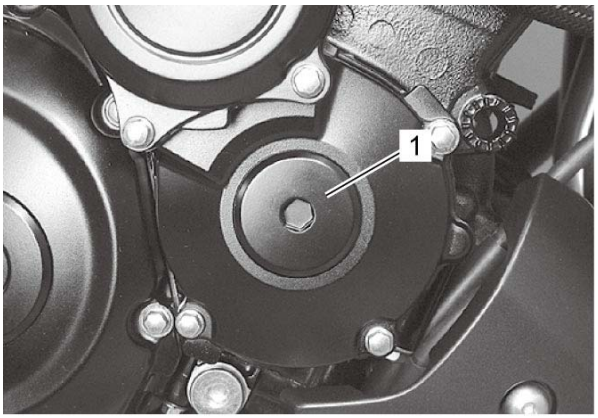

3) Turn the crankshaft to bring the line (1) on the starter clutch to the slit (2) of cap hole thread and also to bring the camshafts to the position as shown.

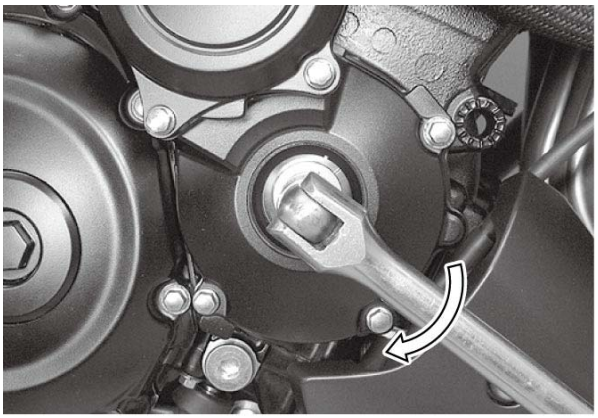

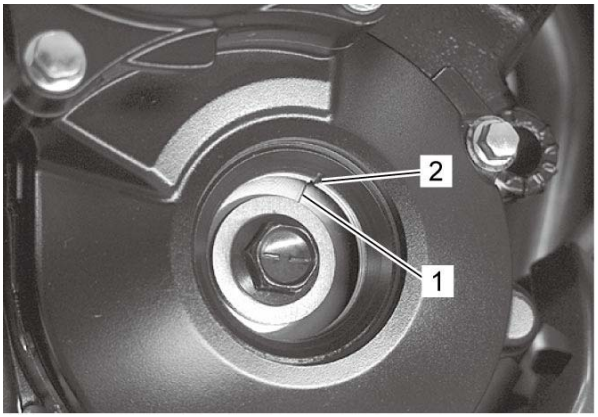

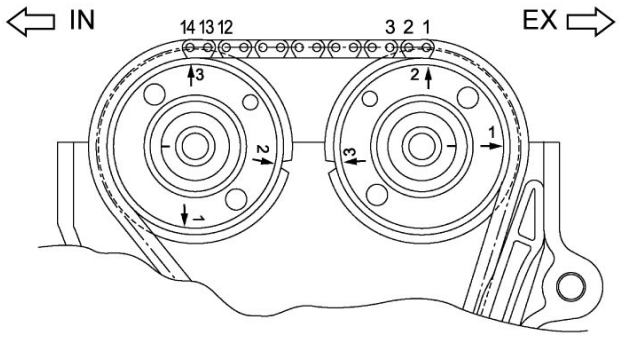

4) Remove the cam chain tension adjuster cap bolt (1), gasket (2) and spring (3).

⚠CAUTION:
The cam chain tension adjuster cap bolt (1) is spring loaded. Be careful when removing it.

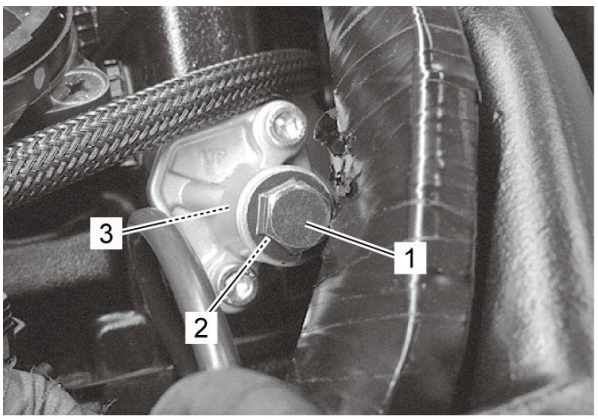

5) Remove the cam chain tension adjuster (1).

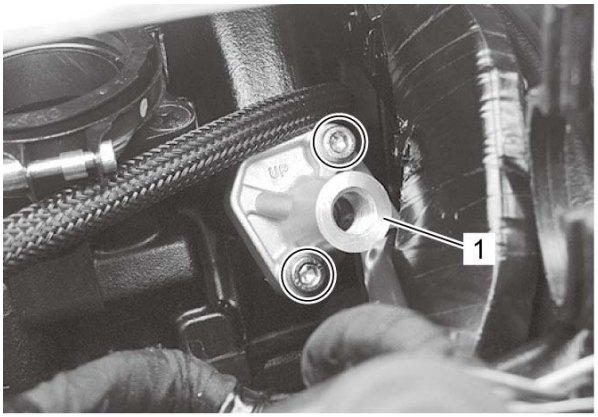

6) Remove the gasket (1).

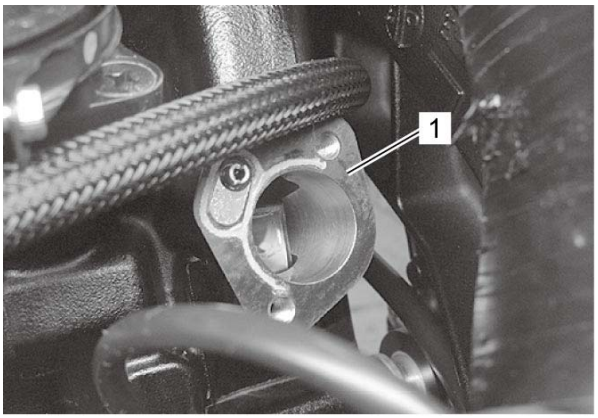

7) Remove the cam chain guide No. 2 (1) and camshaft journal holders (2).

NOTICE:
Be sure to loosen the camshaft journal holder bolts evenly by shifting the wrench in the descending order of numbers.

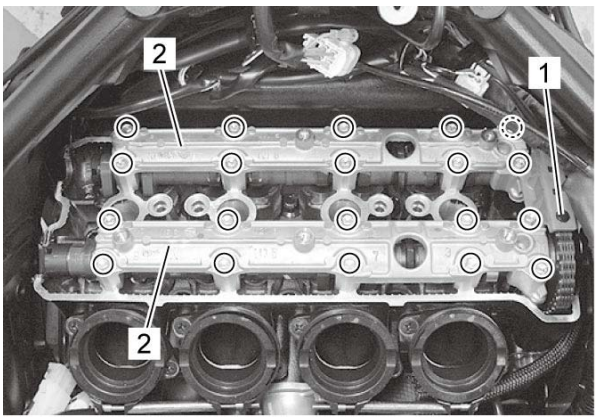

8) Remove the dowel pins (1).

9) Remove the intake camshaft (2) and exhaust camshaft (3).

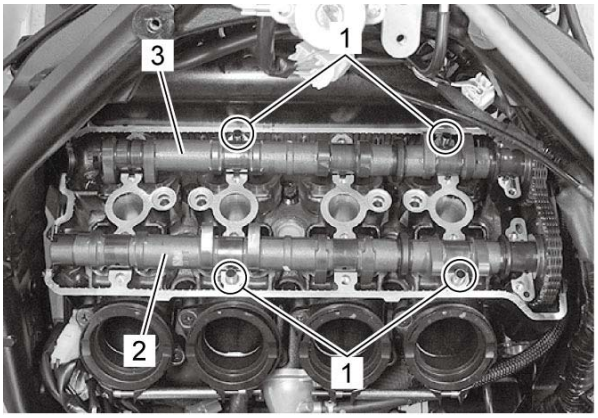

Cam Chain Tension Adjuster Inspection

Refer to ***Cam Chain Tension Adjuster / Camshaft Removal*** and ***Cam Chain Tension Adjuster / Camshaft Installation***.

Unlock the ratchet (1), and move the push rod (2) in place to see if it slides smoothly. If any stickness is noted or ratchet mechanism is faulty, replace the cam chain tension adjuster assembly with a new one.

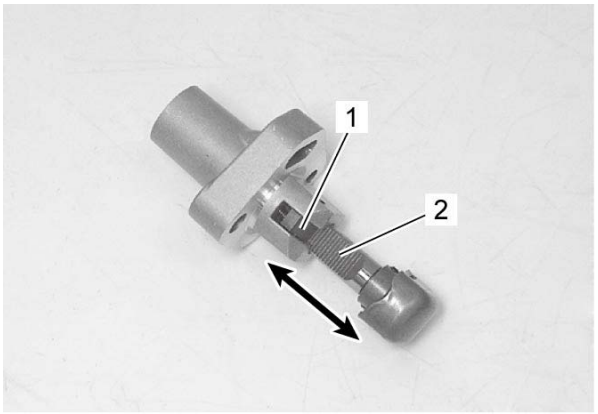

Cam Chain Tensioner Inspection

Refer to ***Cam Chain Guide / Cam Chain Tensioner Removal and Installation***.
Check the contacting surface of the cam chain tensioner. If it is worn or damaged, replace it with a new one.



Camshaft Inspection

Refer to ***Cam Chain Tension Adjuster / Camshaft Removal*** and ***Cam Chain Tension Adjuster / Camshaft Installation***.

Camshaft Identification

The camshafts can be identified by the embossed letter.

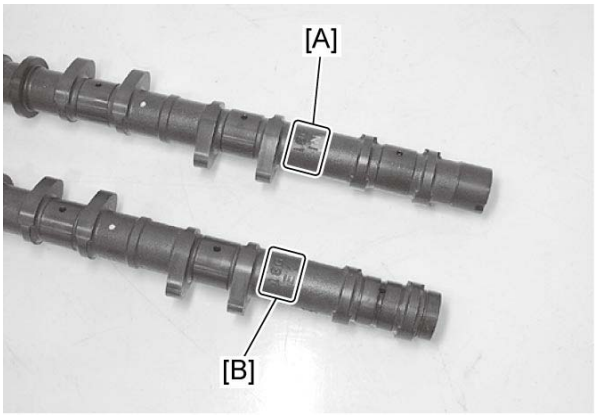

[A]:	IN (Intake camshaft)	[B]:	EX (Exhaust camshaft)

Cam Wear

Check the camshaft for wear or damage.
Measure the cam height “a” with a micrometer.
Replace a camshaft if the cams are worn to the service limit.

Special Tool

09900–20202

Cam height

Intake [Limit]: 36.48 mm (1.437 in)
Exhaust [Limit]: 36.33 mm (1.431 in)

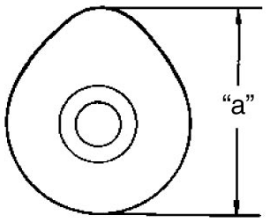

Camshaft Runout

Measure the runout using the dial gauge. Replace the camshaft if the runout exceeds the limit.

Special Tool

(A): 09900–20607
(B): 09900–20701
(C): 09900–21304

Camshaft runout

Intake & Exhaust [Limit]: 0.10 mm (0.004 in)

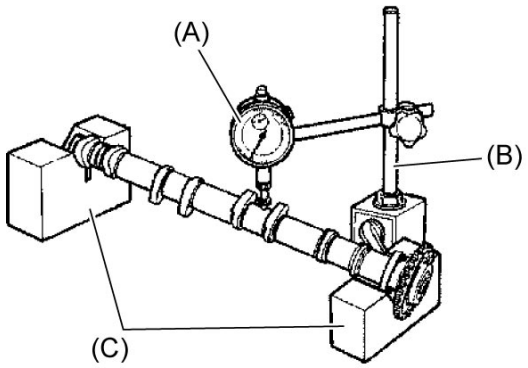

Camshaft Journal Wear

Inspect the camshaft journal wear in the following procedures:

1) Determine whether or not each journal is worn down to the limit by measuring the oil clearance with the camshaft installed in place.
2) Use the plastigauge to read the clearance at the widest portion, which is specified as follows.

Special Tool

(A): 09900–22301
(B): 09900–22302

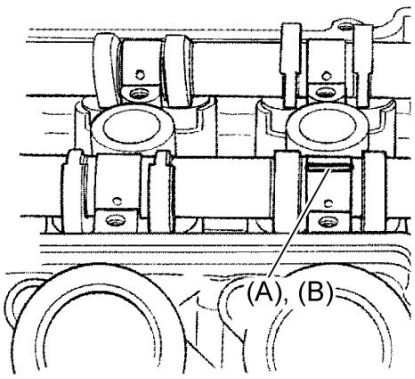

3) Install each camshaft journal holder to its original position. Refer to ***Cam Chain Tension Adjuster / Camshaft Installation***.
4) Tighten the camshaft journal holder bolts in ascending order of numbers to the specified torque. Refer to ***Cam Chain Tension Adjuster / Camshaft Installation***.

NOTE:

Do not rotate the camshafts with the plastigauge in place.

Tightening torque

Camshaft journal holder bolt: 10 N·m (1.0 kgf-m, 7.5 lbf-ft)

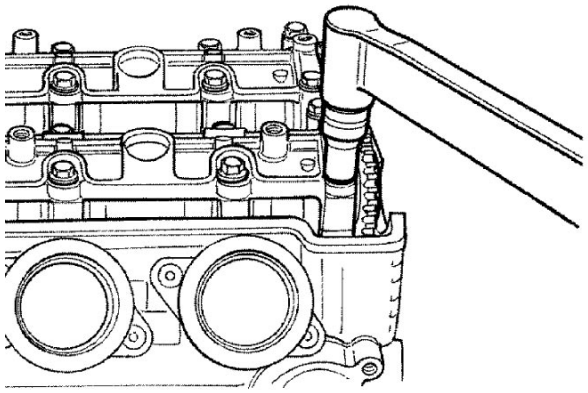

5) Remove the camshaft journal holders and measure the width of the compressed plastigauge using the envelope scale.

6) This measurement should be taken at the widest part of the compressed plastigauge.

Camshaft journal oil clearance

Intake [Limit]: 0.150 mm (0.0059 in)
Exhaust [Limit]: 0.150 mm (0.0059 in)

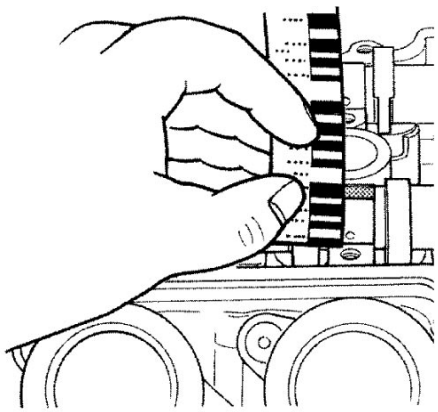

7) If the camshaft journal oil clearance exceeds the limit, measure the inside diameter of the camshaft journal holder and the outside diameter of the camshaft journal. Replace the camshaft or the cylinder head depending upon which one exceeds the specification.

Special Tool

(A): 09900–20602
(B): 09900–22403
(C): 09912–66310

Camshaft journal holder I.D.

Intake [Standard]: 24.012 – 24.025 mm (0.9454 – 0.9458 in)

Exhaust [Standard]: 24.012 – 24.025 mm (0.9454 – 0.9458 in)

Camshaft journal O.D.

Intake [Standard]: 23.959 – 23.980 mm (0.9433 – 0.9440 in)
Exhaust [Standard]: 23.959 – 23.980 mm (0.9433 – 0.9440 in)

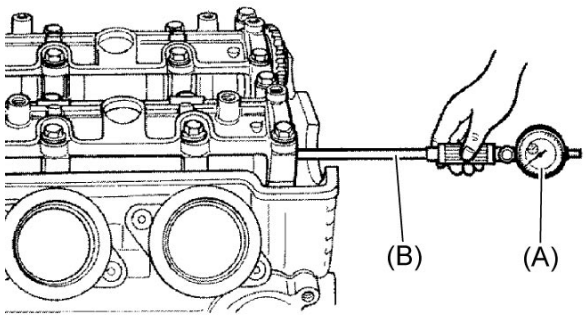

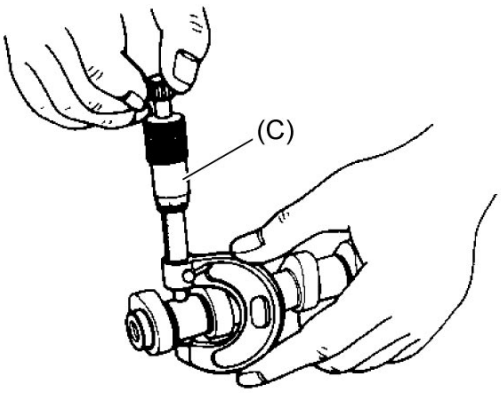

Camshaft Sprocket

Inspect the teeth of each camshaft sprocket for wear or damage.
If they are worn or damaged, replace the sprocket/camshaft assembly and cam chain as a set.





Compression Pressure Check

The compression pressure reading of a cylinder is a good indicator of its internal condition. The decision to overhaul the cylinder is often based on the results of a compression test. Periodic maintenance records kept at your dealership should include compression readings for each maintenance service.

NOTE:
- **Before checking the engine for compression pressure, make sure that the cylinder head bolts are tightened to the specified torque values and the valves are properly adjusted.**
- **Make sure that the battery is in fully-charged condition.**

1) Warm up the engine.

2) Lift and support the fuel tank. ☞

3) Remove the ECM (1) from the air cleaner box.

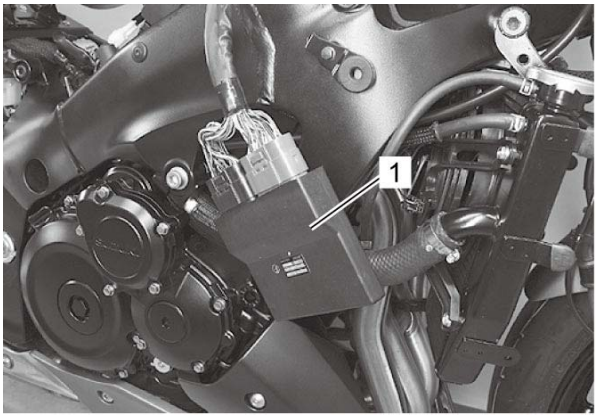

4) Remove the air cleaner box. ☞

5) Remove the spark plugs. ☞

6) Install the compression gauge and adaptor in the spark plug hole. Make sure that the connection is tight.

Special Tool

(A): 09915–64512
(B): 09915–63311

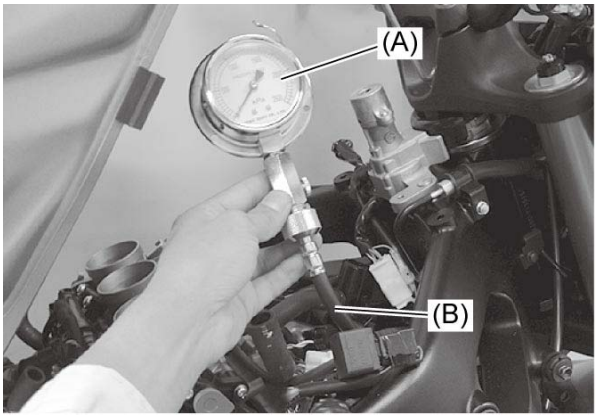

7) Keep the throttle grip in the fully-opened position.



8) Press the starter switch and crank the engine for a few seconds. Record the maximum gauge reading as the cylinder compression.

9) Repeat this procedure with the other cylinders.

Compression pressure

[Standard]: 1300 – 1700 kPa (13.3 – 17.3 kgf/cm^2, 188 – 246 psi)

Compression pressure difference

[Limit]: 200 kPa (2 kgf/cm^2, 28 psi)

If compression pressure is less than the service limit, it is considered any of the following reasons:

- Excessively worn cylinder walls
- Worn piston or piston rings
- Piston rings stuck in grooves
- Poor valve seating
- Ruptured or otherwise defective cylinder head gasket

Overhaul the engine in the following cases:

- Compression pressure in one of the cylinders is 1000 kPa (10.2 kgf/cm^2, 145 psi) and less.
- The difference in compression pressure between any two cylinders is 200 kPa (2 kgf/cm^2, 28 psi) and more.

- All compression pressure readings are below 1300 kPa (13.3 kgf/cm^2, 188 psi) even when they measure 1000 kPa (10.2 kgf/cm^2, 145 psi) and more.

10) After checking the compression pressure, install the removed parts.

Conrod / Crankshaft Inspection

Refer to ***Balancer Shaft Assembly / Crankshaft / Piston / Cylinder Removal*** and ***Balancer Shaft Assembly / Crankshaft / Piston / Cylinder Installation***.

Conrod Small End I.D.

Measure the conrod small end inside diameter using the small bore gauge.
If the conrod small end inside diameter exceeds the service limit, replace the conrod.

Special Tool

(A): 09900–20602
(B): 09900–22401

Conrod small end I.D.

[Limit]: 16.040 mm (0.6314 in)

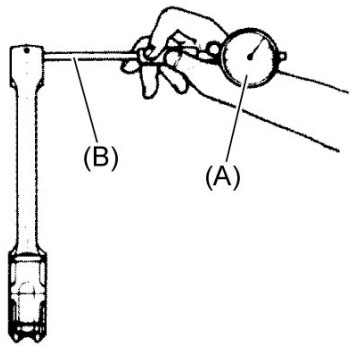

Conrod Big End Side Clearance

1) Check the conrod big end side clearance using the thickness gauge.

Special Tool

(A): 09900–20803

Conrod big end side clearance

[Limit]: 0.3 mm (0.011 in)

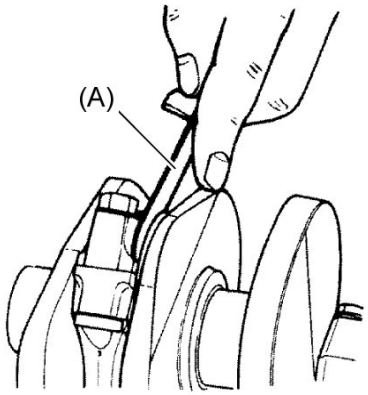

2) If the clearance exceeds the limit, remove the conrod and measure the conrod big end width and crank pin width. Refer to ***Balancer Shaft Assembly / Crankshaft / Piston / Cylinder Installation***. If any of the measurements are out of specification, replace the conrod or crankshaft.

Special Tool

(A): 09912–66310
(B): 09900–20605

Conrod big end width

[Standard]: 19.95 – 20.00 mm (0.7855 – 0.7874 in)

Crank pin width

[Standard]: 20.10 – 20.15 mm (0.7914 – 0.7933 in)

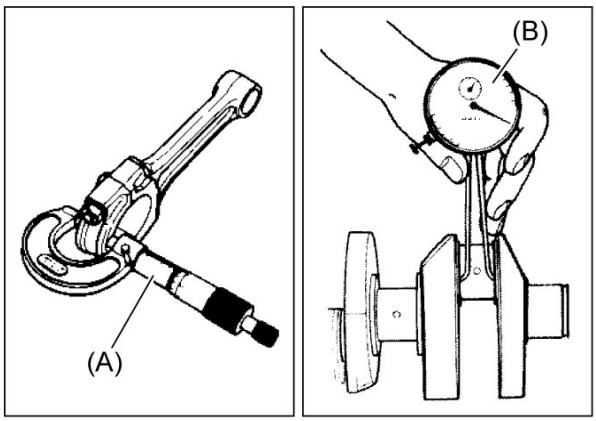

Crankshaft Runout

Support the crankshaft using V-blocks as shown, with the two end journals resting on the blocks. Set up the dial gauge as shown, and rotate the crankshaft slowly to read the runout. Replace the crankshaft if the runout exceeds the service limit.

Special Tool

(A): 09900–20607
(B): 09900–20701
(C): 09900–21304

Crankshaft runout

[Limit]: 0.05 mm (0.0019 in)

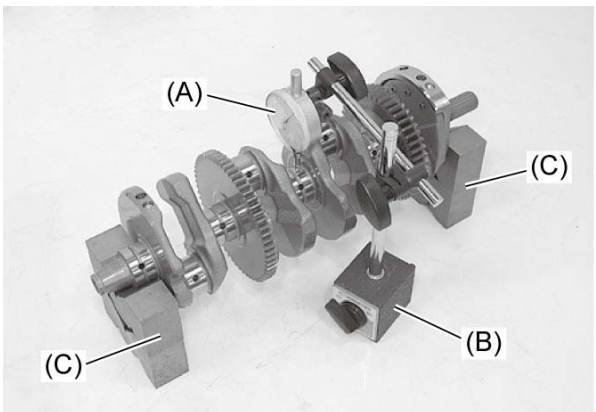



Conrod Crank Pin Bearing Inspection and Selection

Refer to ***Balancer Shaft Assembly / Crankshaft / Piston / Cylinder Removal*** and ***Balancer Shaft Assembly / Crankshaft / Piston / Cylinder Installation***.

Inspection

1) Inspect the bearing surfaces for any signs of fusion, pitting, burn or flaws. If any, replace them with a specified set of bearings.

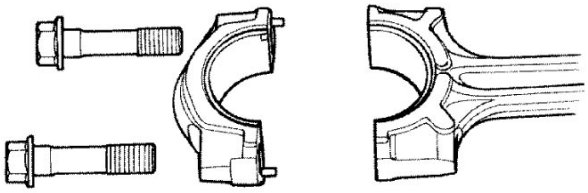

2) Place the plastigauge axially along the crank pin, avoiding the oil hole, as shown in the figure.

Special Tool

(A): 09900–22301

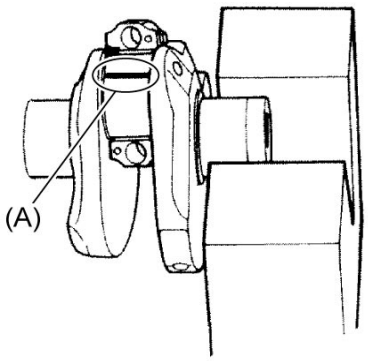

3) Tighten the conrod cap bolts to the specified torque, in two stages.

NOTE:

- **When installing the conrod cap bolts to the crank pin, make sure that I.D. code (1) on the conrod faces towards the intake side.**
- **Never rotate the crankshaft or conrod when a piece of plastigauge is installed.**

Tightening torque

Conrod cap bolt: 21 N·m (2.1 kgf-m, 15.5 lbf-ft) → turn clockwise 90°

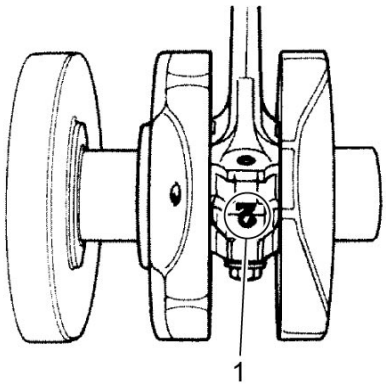

4) Remove the conrod cap bolts and measure the width of the compressed plastigauge using the envelope scale. This measurement should be taken at the widest part of the compressed plastigauge.
If the oil clearance exceeds the service limit, select the specified bearings from the bearing selection table.

Special Tool

(A): 09900–22301

Conrod big end oil clearance

[Standard]: 0.040 – 0.064 mm (0.0016 – 0.0025 in)
[Limit]: 0.080 mm (0.0031 in)

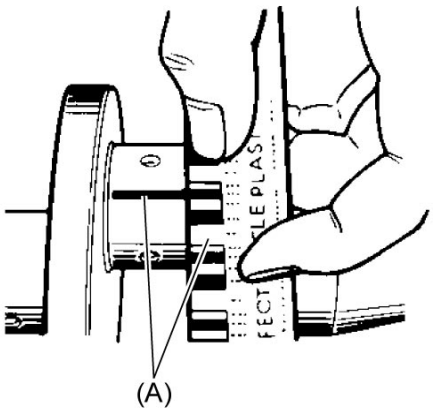

Selection

1) Check the corresponding conrod I.D. code numbers ([1] or [2]) (1).

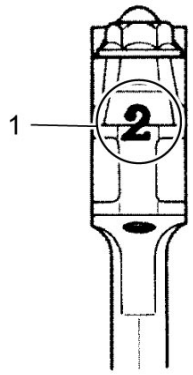

Conrod big end I.D.

[Standard]: 38.000 – 38.0016 mm (1.4961 – 1.4966 in)

Conrod I.D. specification

Code (1)	I.D. specification
1	38.000 – 38.008 mm (1.4961 – 1.4964 in)
2	38.008 – 38.016 mm (1.4964 – 1.4966 in)

2) Check the corresponding crank pin O.D. code numbers ([1], [2] or [3]) (1).

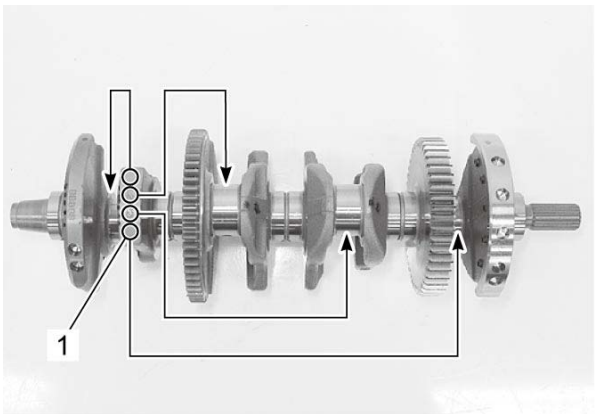

3) Measure the conrod crank pin O.D. with the special tool. If any of the measurements are out of specification, replace the crankshaft.

Crank pin O.D.

[Standard]: 34.976 – 35.000 mm (1.3770 – 1.3779 in)

Crank pin O.D. specification

Code (1)	O.D. specification
1	34.992 – 35.000 mm (1.3776 – 1.3779 in)

2	34.984 – 34.992 mm (1.3773 – 1.3776 in)
3	34.976 – 34.984 mm (1.3770 – 1.3773 in)

Special Tool

(A): 09900–20202

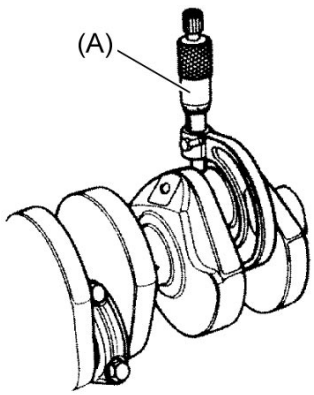

4) Select the specified bearings from the bearing selection table.

NOTICE:
The bearings should be replaced as a set.

Bearing selection table

		Crank pin O.D.		
	Code	1	2	3
Conrod I.D.	1	Green	Black	Brown
	2	Black	Brown	Yellow

Crank pin bearing thickness

[Standard]: 1.476 – 1.492 mm (0.0582 – 0.0587 in)

Bearing thickness specification

Color (1) (Part No.)	Thickness
Yellow (12164-47H10-0D0)	1.488 – 1.492 mm (0.0586 – 0.0587 in)
Brown (12164-47H10-0C0)	1.484 – 1.488 mm (0.0584 – 0.0586 in)
Black (12164-47H10-0B0)	1.480 – 1.484 mm (0.0583 – 0.0584 in)
Green (12164-47H10-0A0)	1.476 – 1.480 mm (0.0582 – 0.0583 in)

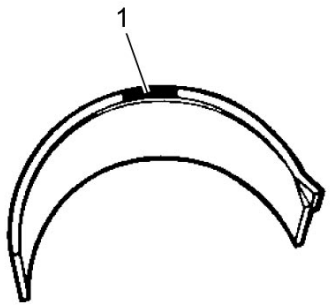

1.	Color code

Conrod Crank Pin Bearing Removal and Installation

Refer to ***Balancer Shaft Assembly / Crankshaft / Piston / Cylinder Removal*** and ***Balancer Shaft Assembly / Crankshaft / Piston / Cylinder Installation***.

Removal

Remove the conrod crank pin bearings (1).

NOTICE:
- **When removing the bearings, be careful not to scratch the conrods and the bearings.**
- **Do not touch the bearing surfaces with your hands. Grasp the bearings by their edges.**

NOTE:
- **Do not remove the bearings (1) unless absolutely necessary.**
- **Make a note of where the bearings are removed from so that they can be reinstalled in their original positions.**

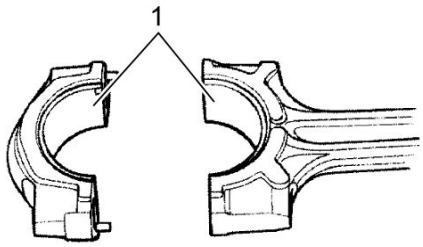

Installation

Reference: Conrod Crank Pin Bearing Inspection and Selection

When installing the bearings into the conrod cap and conrod, be sure to fix the stopper part (1) first, and then press in the other opposite side of the bearing.

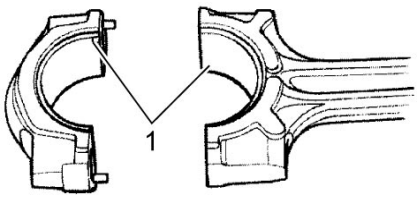

Upper Crankcase / Middle Crankcase / Lower Crankcase Disassembly and Reassembly

Refer to ***Balancer Shaft Assembly / Crankshaft / Piston / Cylinder Removal*** and ***Balancer Shaft Assembly / Crankshaft / Piston / Cylinder Installation***.

Disassembly

Crankshaft journal bearing

Remove the crankshaft journal bearings (1).

NOTICE:
- **When removing the crankshaft journal bearings, be careful not to scratch the crankcase and the crankshaft journal bearings.**
- **Do not touch the bearing surfaces with your hands. Grasp the bearings by their edges.**

NOTE:
- **Do not remove the crankshaft journal bearings unless absolutely necessary.**
- **Make a note of where the crankshaft journal bearings are removed from so that they can be reinstalled in their original positions.**

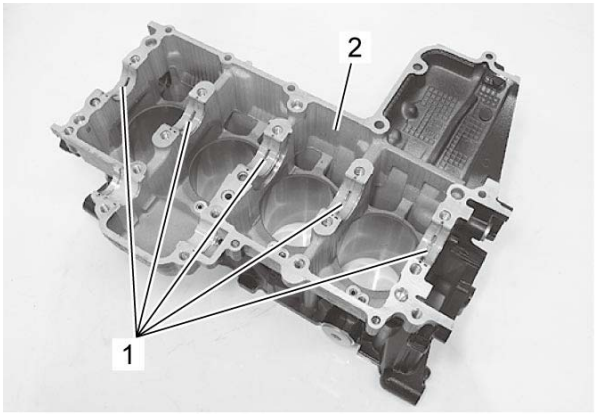

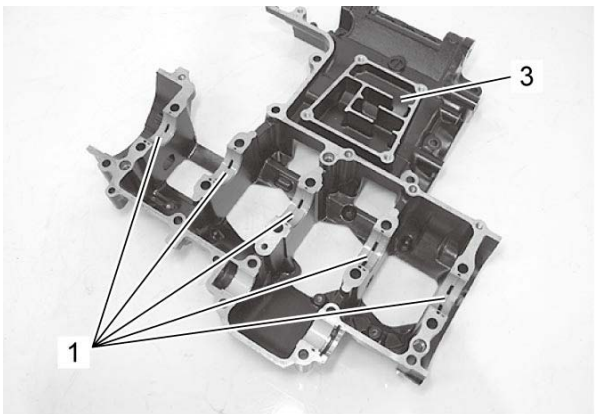

2.	Upper crankcase	3.	Middle crankcase

Balancer shaft bearing

Remove the balancer shaft bearings. ☞

Oil pump

Remove the oil pump (1). ☞

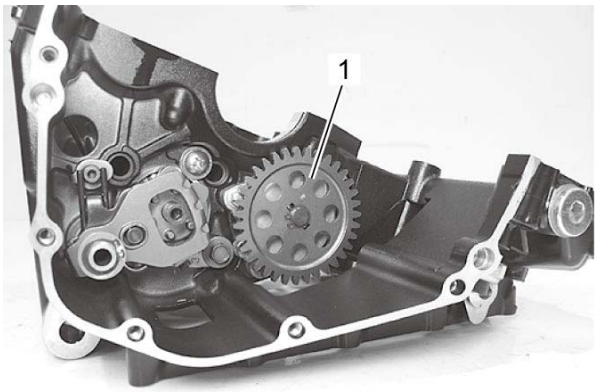

GP switch

Remove the GP switch (1). ☞

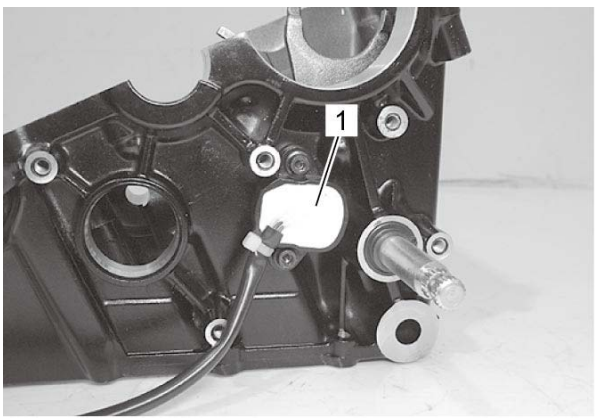

Gearshift system

1) Remove the gearshift shaft (1), gearshift cam plate (2) and gearshift cam stopper (3). ☞

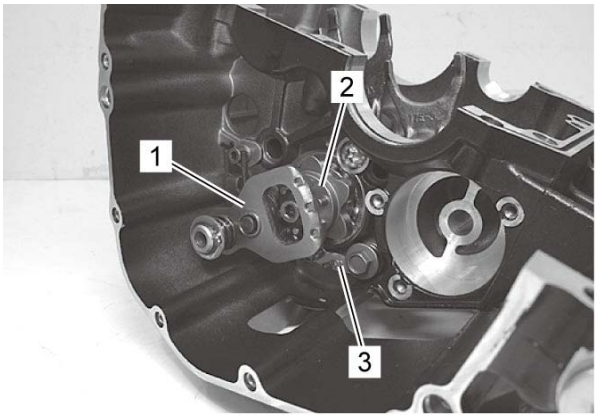

2) Remove the gearshift forks (1) and gearshift cam (2). ☞

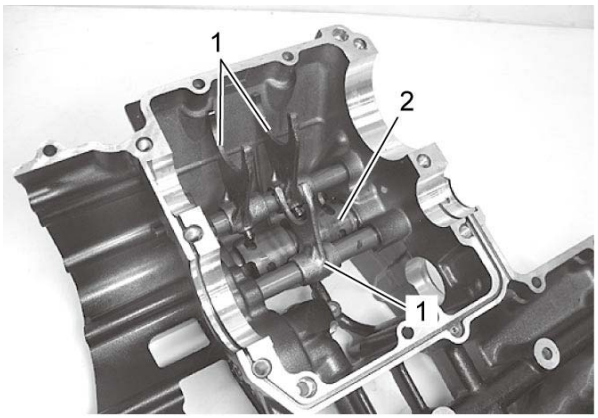

Oil jet

Remove the oil jet (1) (for transmission). ☞

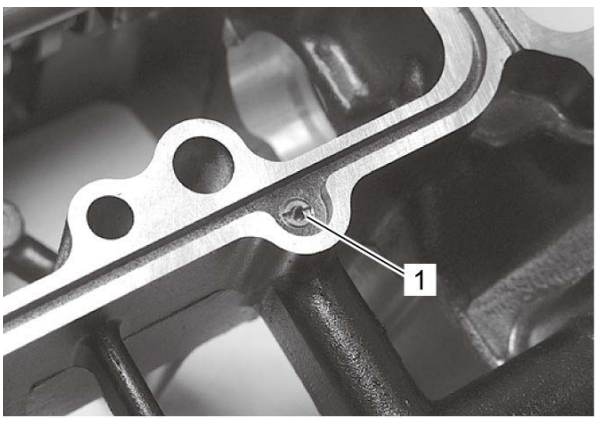

Oil pressure switch

Remove the oil pressure switch (1). ☞

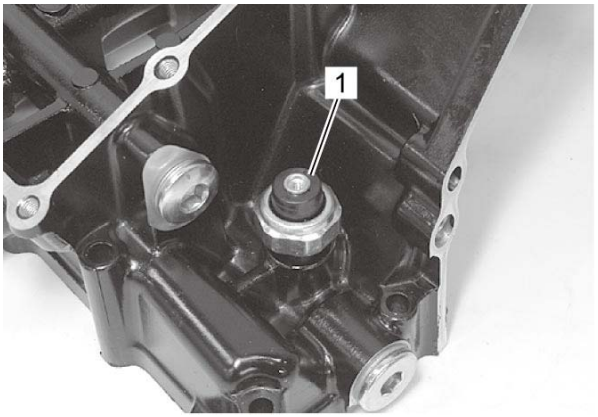

Oil gallery plug

1) Remove the oil gallery plugs (1).

2) Remove the oil gallery lower plugs (2).

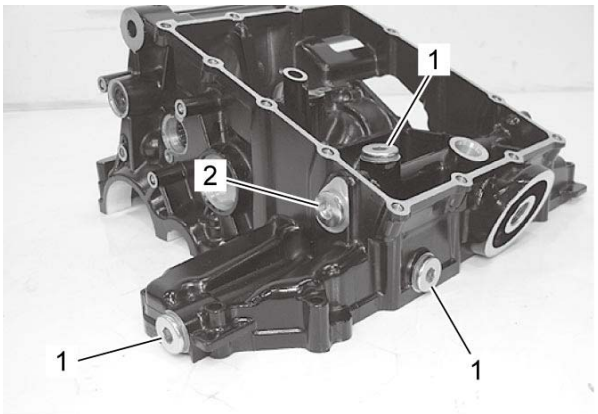

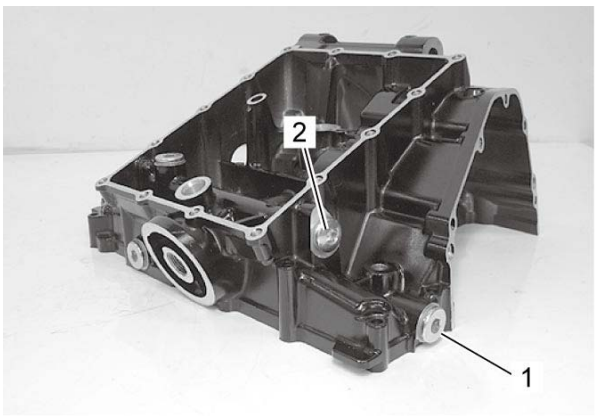

3) Remove the oil gallery upper plug (M10) (1).

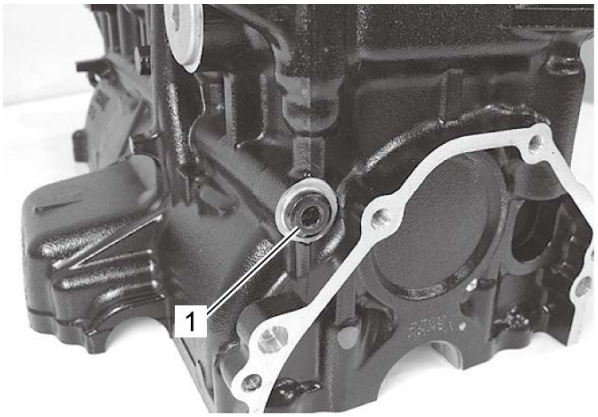

Water jacket plug

Remove the water jacket plugs (1).

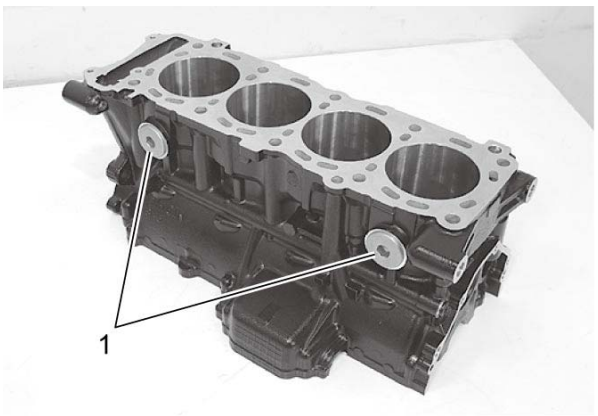

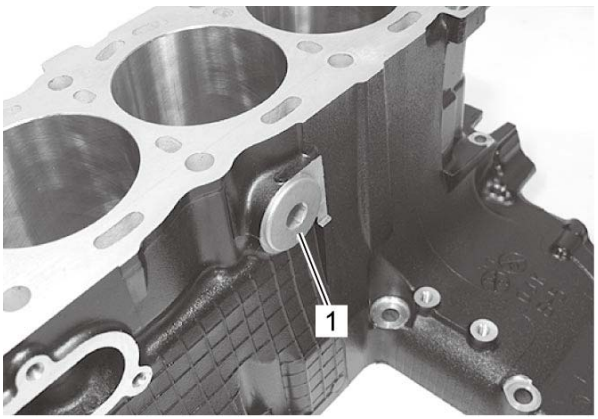

Oil seal / bearing

Remove the gearshift shaft oil seal (1), gearshift shaft bearings (2) and gearshift cam bearing (3). ☞

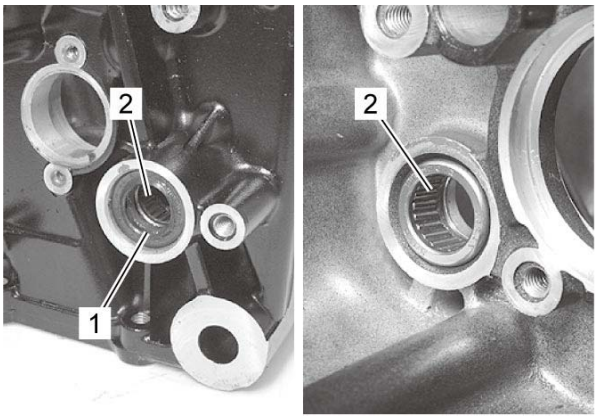

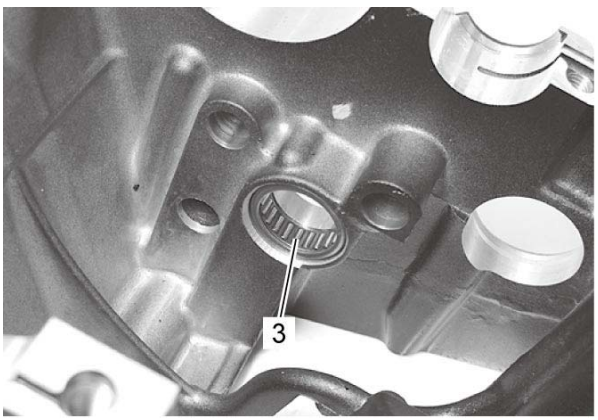

Reassembly

Oil seal / bearing

Install the new gearshift cam bearing, new gearshift shaft bearings and new gearshift shaft oil seal. ☞

Water jacket plug

- Apply engine coolant to the new O-rings (1) of the water jacket plugs.
- Tighten each plug (2) to the specified torque.

Tightening torque

Water jacket plug (a): 9.5 N·m (0.97 kgf-m, 7.00 lbf-ft)

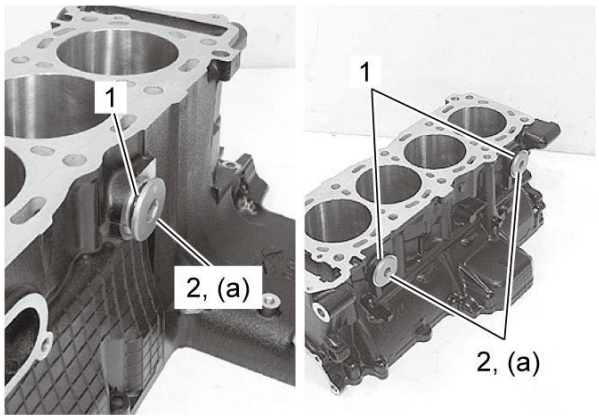

Oil gallery plug

1) Install the new gasket (1) to the oil gallery upper plug (M10) (2).

NOTICE:
The edge (3) of gasket (1) faces the oil gallery upper plug (M10) (2) side.

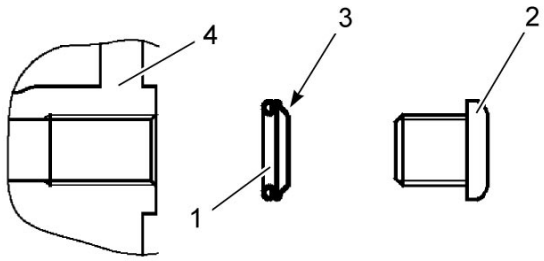

4.	Upper crankcase

2) Apply thread lock to the oil gallery upper plug (M10) (1) and tighten it to the specified torque.

"A": Thread lock cement 99000–32150 (THREAD LOCK CEMENT 1322D)

Tightening torque

Oil gallery upper plug (M10) (a): 18 N·m (1.8 kgf-m, 13.5 lbf-ft)

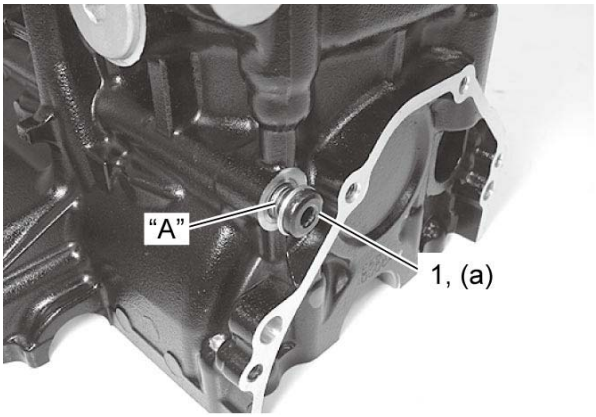

3) Install the new gaskets to the oil gallery plugs.

4) Tighten the oil gallery plugs (1) to the specified torque.

Tightening torque

Oil gallery plug (M16) (a): 35 N·m (3.6 kgf-m, 26.0 lbf-ft)

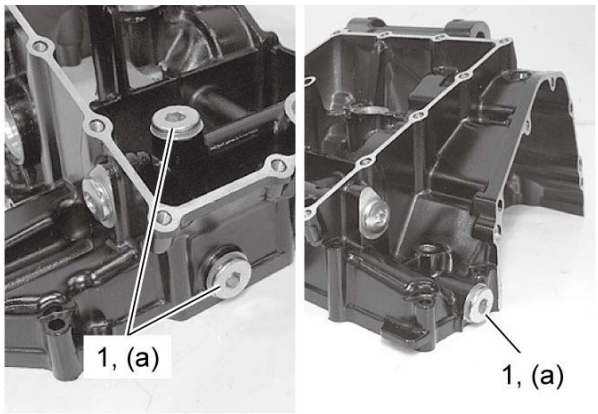

5) Install the new gaskets (1) to the oil gallery lower plugs (2).

NOTE:
The edge (3) of gasket (1) faces the oil gallery lower plug (2) side.

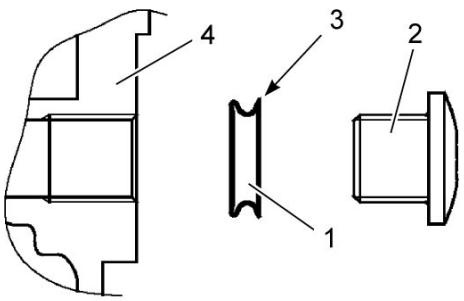

4.	Lower crankcase

6) Tighten the oil gallery lower plugs (1) to the specified torque.

Tightening torque

Oil gallery lower plug (M14) (a): 23 N·m (2.3 kgf-m, 17.0 lbf-ft)

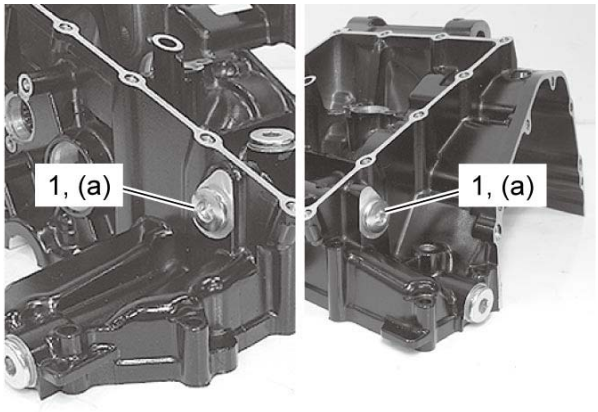

Oil jet

Install the oil jet (for transmission). ☞

Gearshift system

1) Install the gearshift cam (1) and gearshift forks (2). ☞

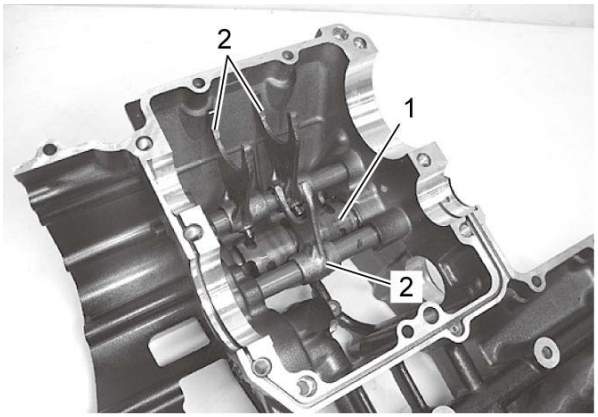

2) Install the gearshift cam stopper (1), gearshift cam plate (2) and gearshift shaft (3). ☞

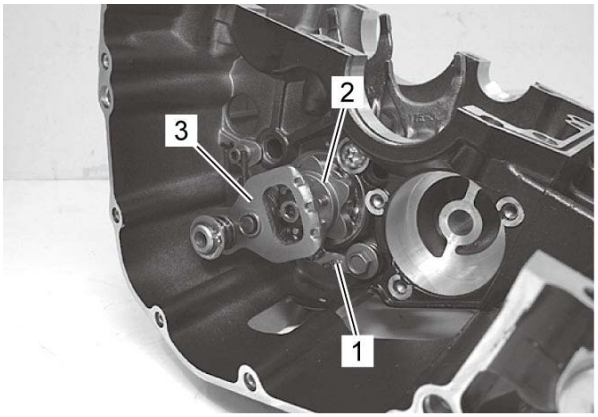

GP switch

Install the GP switch (1). ☞

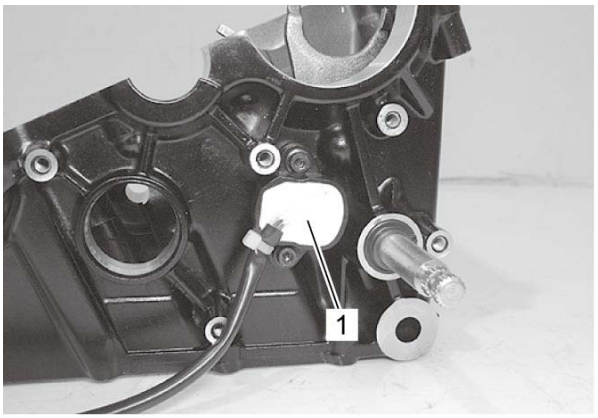

Oil pump

Install the oil pump (1). ☞

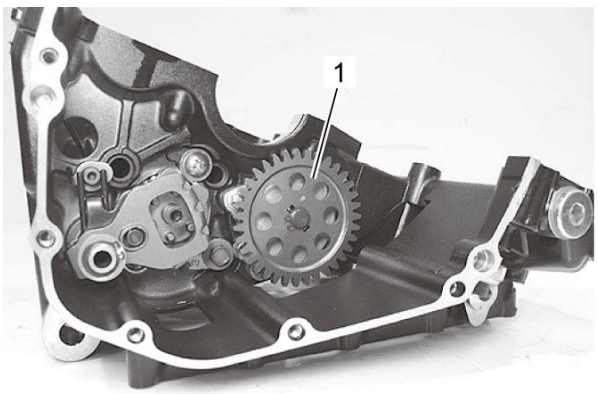

Balancer shaft bearing

Install the balancer shaft bearings. ☞

Crankshaft journal bearing

Install the crankshaft journal bearings to the upper and lower crankcases, be sure to fix the stopper part (1) first and press the other end.

NOTICE:

- **When removing the crankshaft journal bearings, be careful not to scratch the crankcase and the crankshaft journal bearings.**
- **Do not touch the bearing surfaces with your hands. Grasp the bearings by their edges.**

NOTE:

- **Do not touch the bearing surfaces with your hands. Grasp by the edge of the bearing shell.**
- **Inspect and select the crankshaft journal bearing if necessary. Refer to *Crankshaft Journal Bearing Inspection and Selection*.**

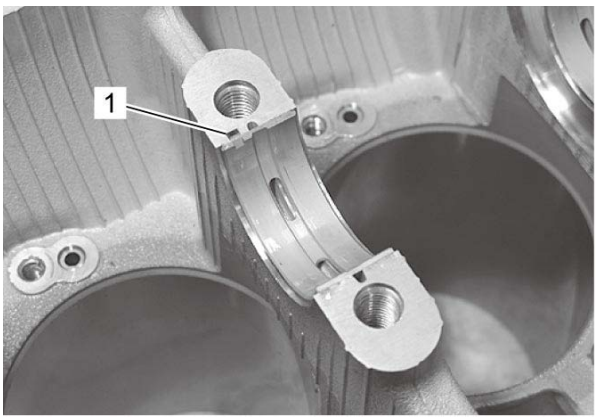

Crankshaft Journal Bearing Inspection and Selection

Refer to ***Balancer Shaft Assembly / Crankshaft / Piston / Cylinder Removal*** and ***Balancer Shaft Assembly / Crankshaft / Piston / Cylinder Installation***.

Inspection

1) Inspect each upper and lower crankcase bearing (1) for any damage.

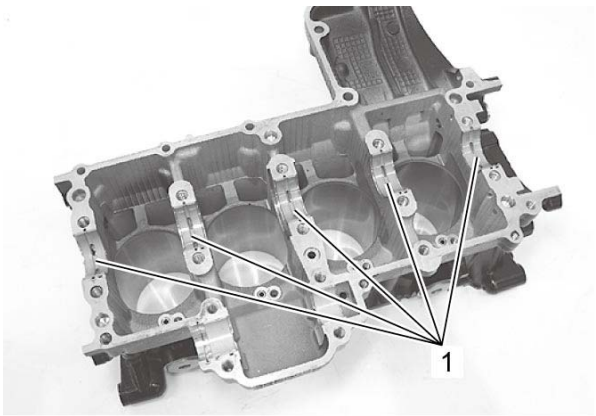

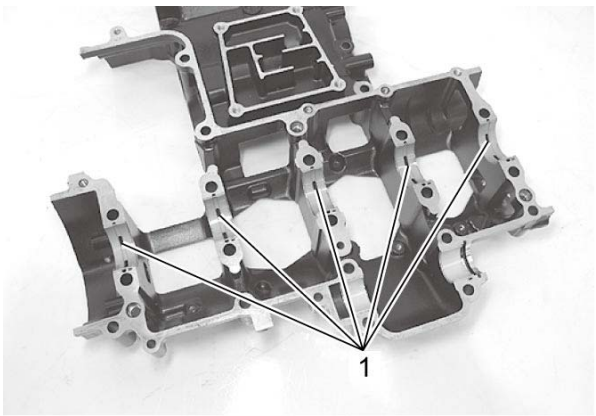

2) Set the crankshaft onto the upper crank case.

3) Install the plastigauge onto each crankshaft journal.

Special Tool

(A): 09900–22301

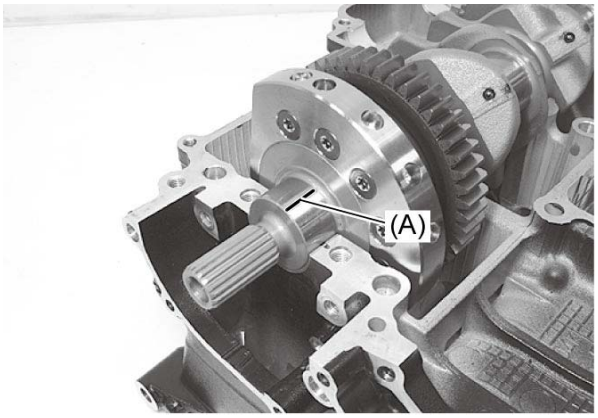

4) Mate the lower crankcase with the upper crankcase.

5) Tighten the crankcase middle bolts (M9) (1) in order of number. Tighten each bolt a little at a time to equalize the pressure in the following two steps.

NOTE:
Do not rotate the crankshaft when a piece of plastigauge is installed.

Tightening torque

Crankcase middle bolt (M9) (a): 18 N·m (1.8 kgf-m, 13.5 lbf-ft) → turn clockwise 50°

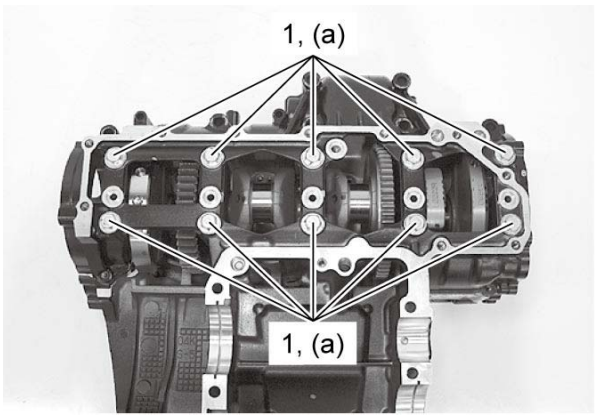

6) Remove the middle crankcase and measure the width of compressed plastigauge using the envelope scale. This measurement should be taken at the widest part of the compressed plastigauge. If the oil clearance exceeds the service limit, select the specified bearings from the bearing selection table.

Crankshaft journal oil clearance

[Standard]: 0.010 – 0.028 mm (0.0004 – 0.0011 in)
[Limit]: 0.080 mm (0.0031 in)

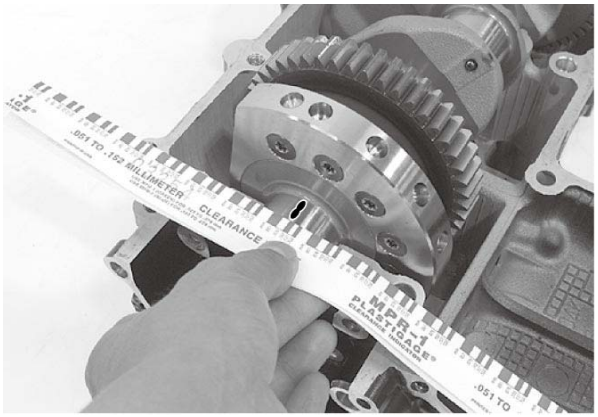

Selection

1) Check the corresponding crankcase journal I.D. codes (1) ([A], [B] or [C]), which are stamped on the upper crankcase.

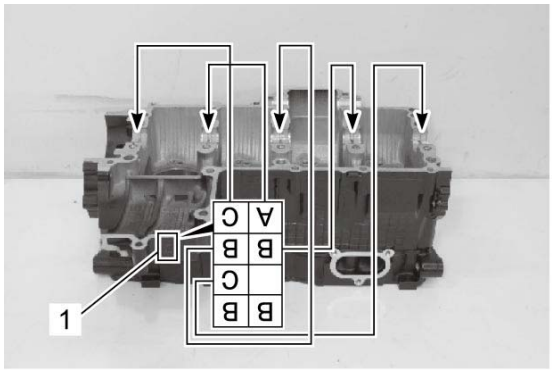

Crankcase journal I.D.

[Standard]: 38.000 – 38.018 mm (1.4961 – 1.4967 in)

Crankcase journal I.D. specification

Code (1)	I.D. specification
A	38.000 – 38.006 mm (1.4961 – 1.4963 in)
B	38.006 – 38.012 mm (1.4963 – 1.4965 in)
C	38.012 – 38.018 mm (1.4965 – 1.4967 in)

2) Check the corresponding crankshaft journal O.D. codes (1) ([A], [B] or [C]), which are stamped on the crankshaft.

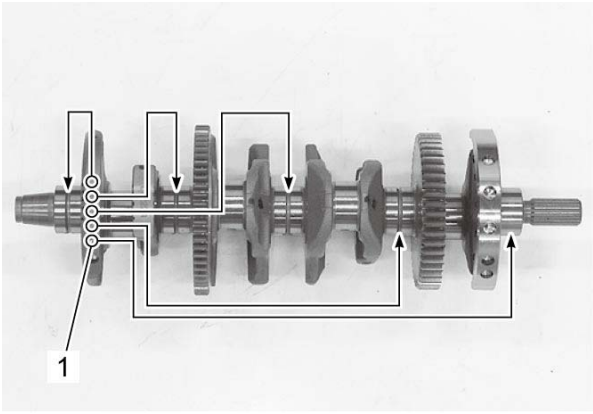

3) Measure the crankshaft O.D. with the special tool. If any of the measurements are out of specification, replace the crankshaft.

Crankcase journal O.D.

[Standard]: 34.982 – 35.000 mm (1.3773 – 1.3779 in)

Crankshaft journal O.D. specification

Code (1)	O.D. specification
A	34.994 – 35.000 mm (1.3777 – 1.3779 in)
B	34.988 – 34.994 mm (1.3775 – 1.3777 in)
C	34.982 – 34.988 mm (1.3773 – 1.3775 in)

Special Tool

(A): 09900–20202

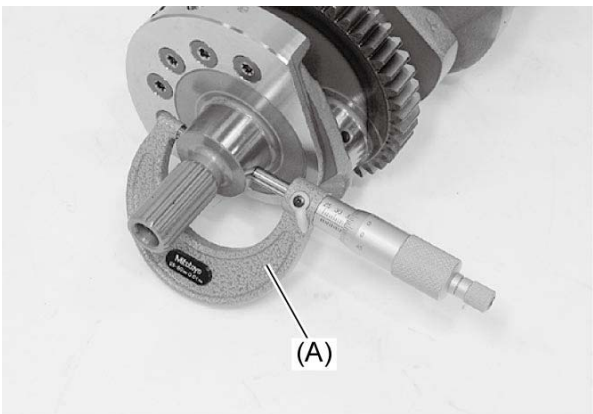

4) Select the specified bearings from the bearing selection table.

Bearing selection table

		Crankshaft O.D.		
	Code	A	B	C
Crankcase I.D.	A	Green	Black	Brown
	B	Black	Brown	Yellow
	C	Brown	Yellow	Blue

Crankcase journal bearing thickness

[Standard]: 1.492 – 1.507 mm (0.0588 – 0.0593 in)

Bearing thickness specification

Color (1) (Part No.)	Thickness
Blue (12229-04K00-0E0)	1.504 – 1.507 mm (0.0592 – 0.0593 in)
Yellow (12229-04K00-0D0)	1.501 – 1.504 mm (0.0591 – 0.0592 in)
Brown (12229-04K00-0C0)	1.498 – 1.501 mm (0.0590 – 0.0591 in)
Black (12229-04K00-0B0)	1.495 – 1.498 mm (0.0589 – 0.0590 in)
Green (12229-47H10-0A0)	1.492 – 1.495 mm (0.0588 – 0.0589 in)

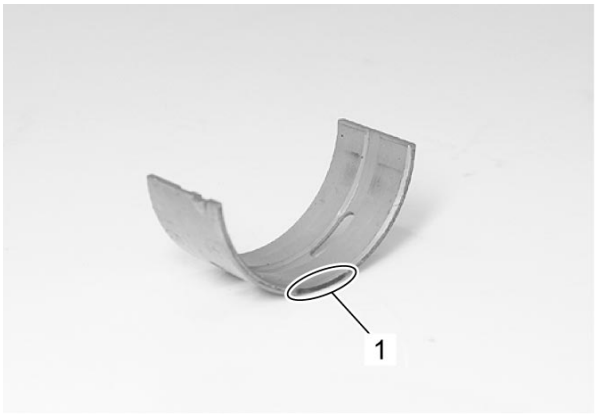

1.	Color code

Crankshaft Thrust Clearance Inspection and Selection

Refer to ***Balancer Shaft Assembly / Crankshaft / Piston / Cylinder Removal*** and ***Balancer Shaft Assembly / Crankshaft / Piston / Cylinder Installation***.

Inspection

1) With the crankshaft's right-side and left-side thrust bearings inserted into the upper crankcase.

2) Measure the thrust clearance "a" between the left-side thrust bearing and crankshaft using the thickness gauge. If the thrust clearance exceeds the standard range, adjust the thrust clearance.

NOTE:
Pull the crankshaft to the left (generator side) so that there is no clearance on the right-side thrust bearing.

Special Tool

(A): 09900–20803

Crankshaft thrust clearance

[Standard]: 0.060 – 0.110 mm (0.0024 – 0.0043 in)

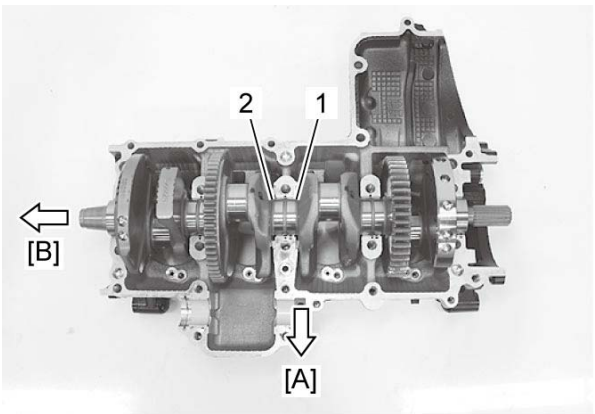

[A]:	Front side	1.	Right-side thrust bearing
[B]:	Left side	2.	Left-side thrust bearing

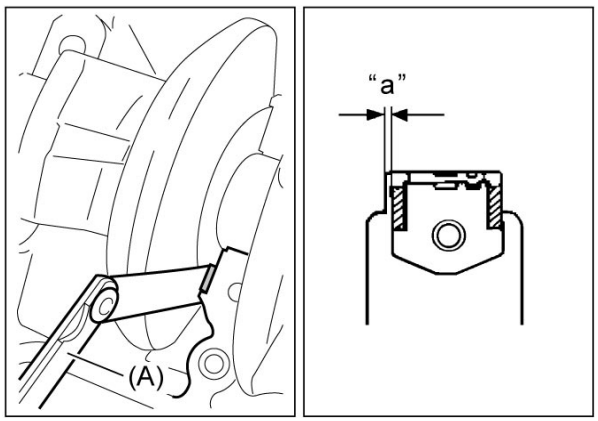

“a”:	Clearance

Selection

1) Remove the right-side thrust bearing and measure its thickness using the micrometer. If the thickness of the right-side thrust bearing is below standard, replace it with a new bearing and measure the thrust clearance again, as described in Inspection 1) and 2).

Special Tool

(A): 09912–66310

Thrust bearing thickness

Right side [Standard]: 2.42 – 2.44 mm (0.0953 – 0.0960 in)
Left side [Standard]: 2.36 – 2.50 mm (0.0930 – 0.0984 in)

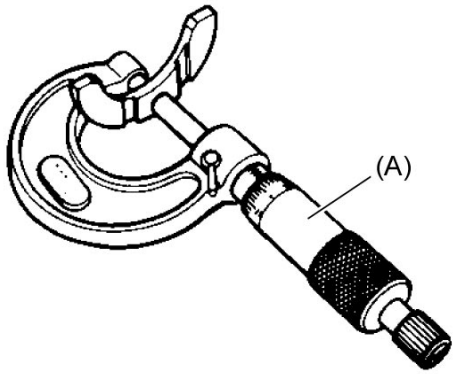

2) If the right-side thrust bearing is within the standard range, reinsert the right-side thrust bearing and remove the left-side thrust bearing.

3) With the left-side thrust bearing removed, measure the clearance “a” using the thickness gauge as shown.

Special Tool

(A): 09900–20803

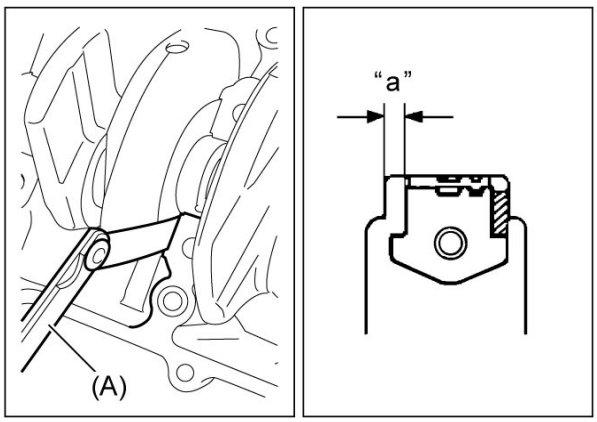

4) Select a left-side thrust bearing from the selection table.

NOTE:
Right-side thrust bearing has the same specification as the GREEN (12228-48B00-0E0) of left-side thrust bearing.

Thrust bearing selection table

Clearance before inserting left-side thrust bearing	Color (1) (Part No.)	Thrust bearing thickness	Thrust clearance
2.570 – 2.590 mm (0.1012 – 0.1020 in)	Brown (12228-48B00-0B0)	2.480 – 2.500 mm (0.0976 – 0.0984 in)	0.070 – 0.110 mm (0.0028 – 0.0043 in)
2.550 – 2.570 mm (0.1004 – 0.1012 in)	Red (12228-48B00-0C0)	2.460 – 2.480 mm (0.0969 – 0.0976 in)	
2.530 – 2.550 mm (0.0996 – 0.1004 in)	Yellow (12228-48B00-0D0)	2.440 – 2.460 mm (0.0960 – 0.0969 in)	
2.510 – 2.530 mm (0.0988 – 0.0996 in)	Green (12228-48B00-0E0)	2.420 – 2.440 mm (0.0953 – 0.0960 in)	
2.490 – 2.510 mm (0.0980 – 0.0988 in)	Blue (12228-48B00-0F0)	2.400 – 2.420 mm (0.0945 – 0.0953 in)	
2.470 – 2.490 mm (0.0972 – 0.0980 in)	Orange (12228-48B00-0G0)	2.380 – 2.400 mm (0.0937 – 0.0945 in)	
2.440 – 2.470 mm (0.0960 – 0.0972 in)	Black (12228-48B00-0H0)	2.360 – 2.380 mm (0.0930 – 0.0937 in)	0.060 – 0.110 mm (0.0024 – 0.0043 in)

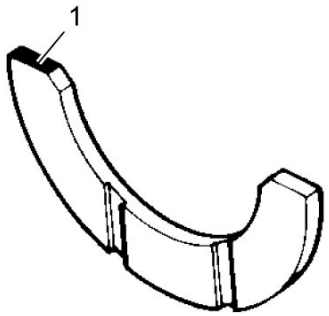

1.	Color code

5) After selecting a left-side thrust bearing, install it and then measure the thrust clearance again.

Cylinder Head Cover Inspection

Refer to ***Cylinder Head Cover Removal and Installation***.
Clean and check the gasket grooves (1) and PAIR reed valve mating surfaces (2) of the cylinder head cover.
If there is anything unusual, replace the cylinder head cover with a new one.

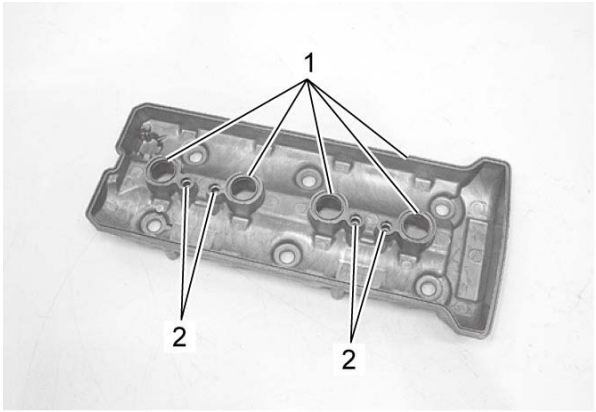

Cylinder Head Cover Removal and Installation

Refer to ***Throttle Body Removal and Installation***.

Removal

1) Remove the ignition coils. ☞

2) Disconnect the PAIR solenoid valve coupler and remove the PAIR reed valves. ☞

3) Remove the cylinder head cover (1).

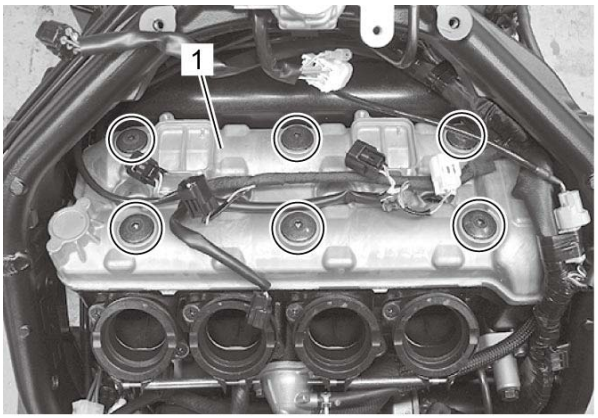

4) Remove the dowel pins (1) and O-rings (2).

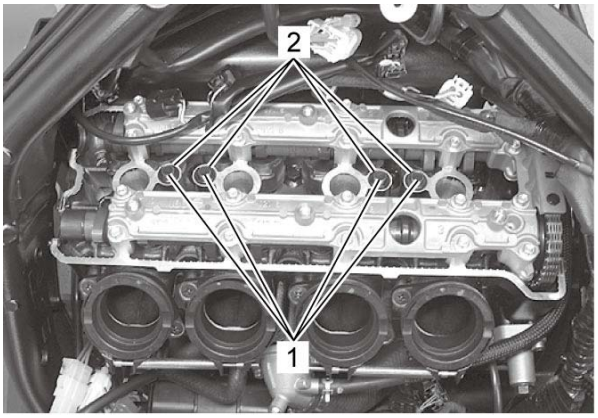

5) Remove the gaskets (1) and (2).

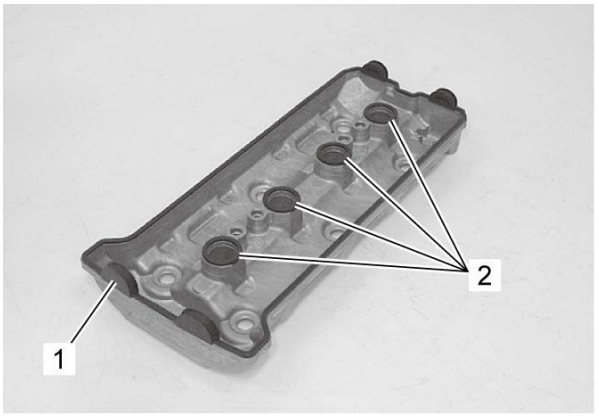

Installation

Reference: Cylinder Head Cover Inspection

1) Install the dowel pins (1) and new O-rings (2).

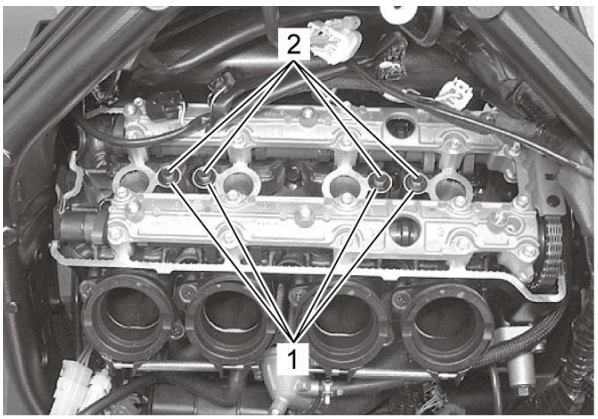

2) Install new gaskets to the cylinder head cover.

3) Apply sealant to the cam end cap points of the gasket as shown.

"A": Sealant 99000–31140 (SUZUKI BOND 1207B)

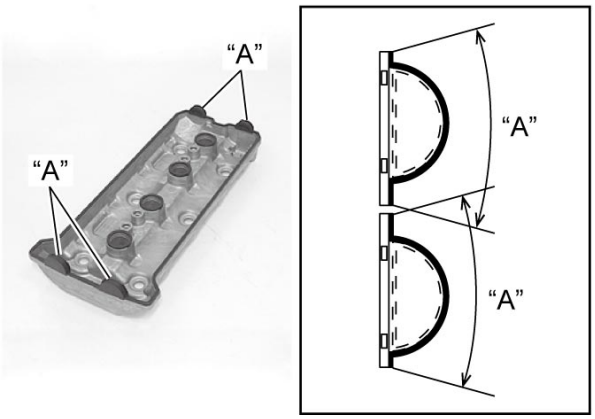

4) Place the cylinder head cover on the cylinder head.

5) Set the new gaskets (1) to each cylinder head cover bolt and coat the both sides of the gasket with engine oil.

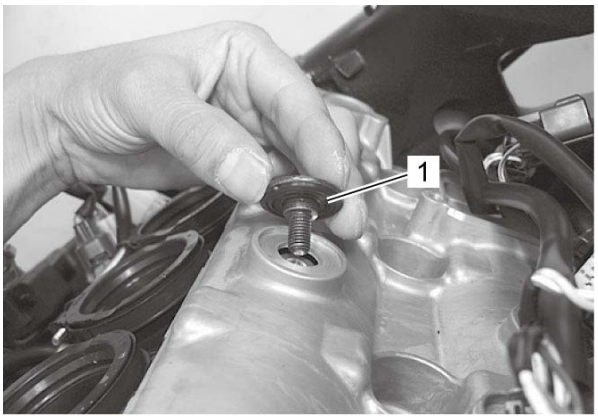

6) Tighten the cylinder head cover bolts (1) to the specified torque.

Tightening torque

Cylinder head cover bolt (a): 14 N·m (1.4 kgf-m, 10.5 lbf-ft)

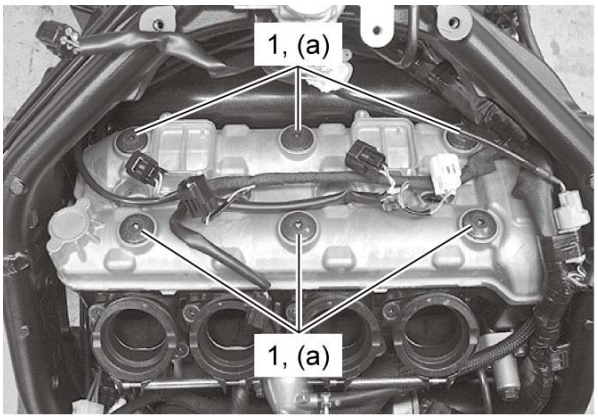

7) Install the following parts.

- PAIR reed valves. ☞
- PAIR control solenoid valve. ☞
- Ignition coils. ☞

Cylinder Head Disassembly and Reassembly

Refer to ***Cylinder Head Removal*** and ***Cylinder Head Installation***.

Disassembly

1) Remove the ECT sensor (1). ☞

2) Remove the thermostat (2). ☞

3) Remove the water bypass hose union (3).

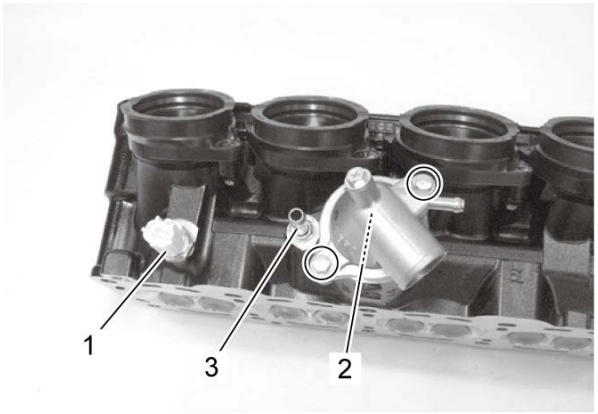

4) Remove the oil jet (for cam chain tension adjuster) (1). ☞

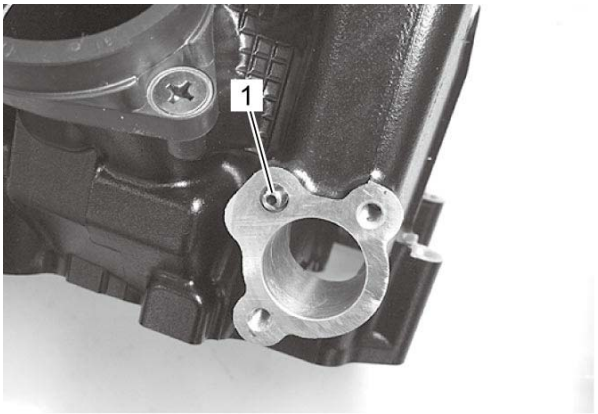

5) Remove the oil gallery plug (1).

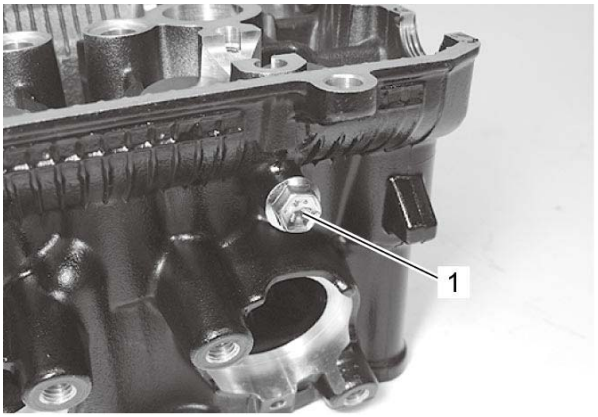

6) Remove the following parts.
- Intake pipes (1): ☞
- Valves (2) and valve springs: ☞
- Valve guides: ☞

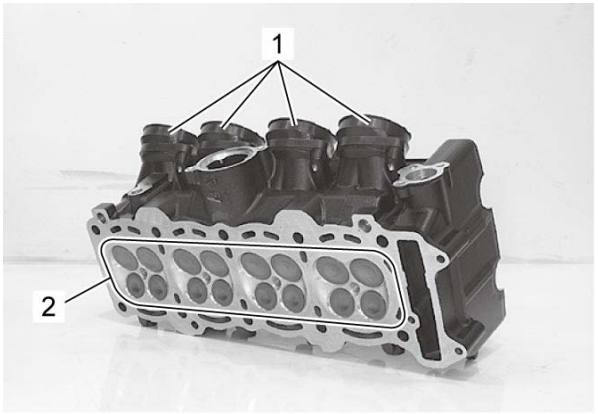

Reassembly

Reference: Valve Inspection
Reference: Cylinder Head Inspection
Reference: Valve Seat Repair

1) Install the following parts:
- Intake pipes: ☞
- Valves and valve springs: ☞
- Valve guides: ☞

2) Install the oil gallery bolt (1) with new gasket and tighten it to the specified torque.

Tightening torque

Oil gallery bolt (a): 10 N·m (1.0 kgf-m, 7.5 lbf-ft)

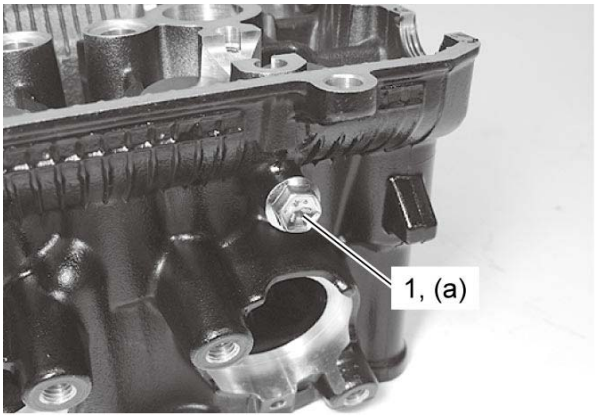

3) Install the oil jet (1) (for cam chain tension adjuster). ☞

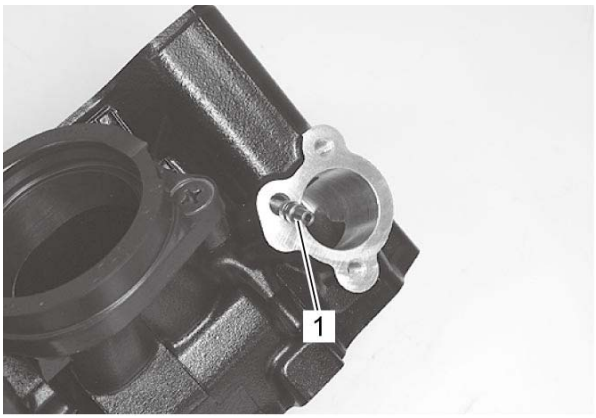

4) Apply sealant to the thread part of bypass hose union (1) and tighten it to the specified torque.
"A": Sealant 99000–31140 (SUZUKI BOND 1207B)

Tightening torque
Bypass hose union (a): 12 N·m (1.2 kgf-m, 9.0 lbf-ft)

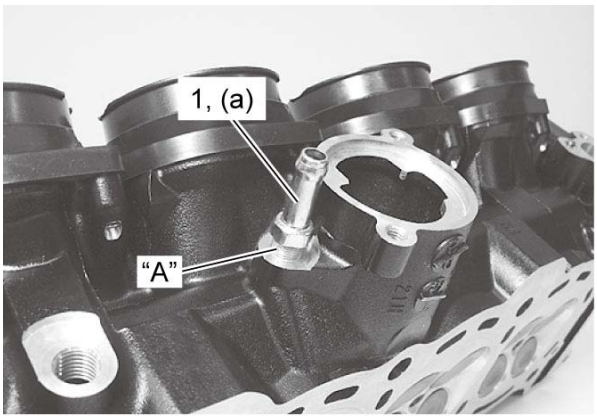

5) Install the thermostat. ☞

6) Install the ECT sensor. ☞

Cylinder Head Inspection

Refer to ***Cylinder Head Removal*** and ***Cylinder Head Installation***.

1) Decarbonize the combustion chambers.

2) Check the gasket surface of the cylinder head for distortion with a straightedge and thickness gauge, taking a clearance reading at several places as indicated. If the largest reading at any position of the straightedge exceeds the limit, replace the cylinder head.

Special Tool

09900–20803

Cylinder head distortion

[Limit]: 0.20 mm (0.0078 in)

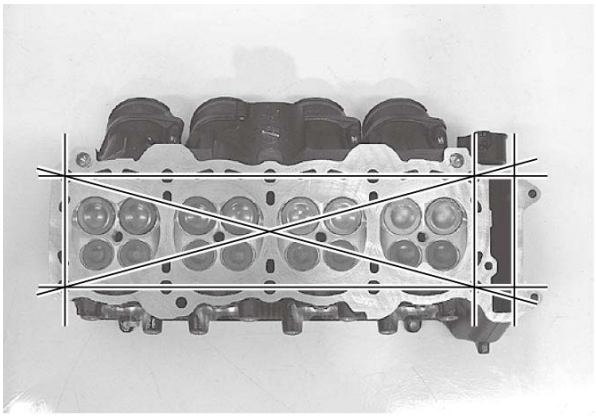

Cylinder Head Installation

Reference: Cylinder Head Inspection

1) Install the dowel pins (1) and a new cylinder head gasket (2) to the cylinder.

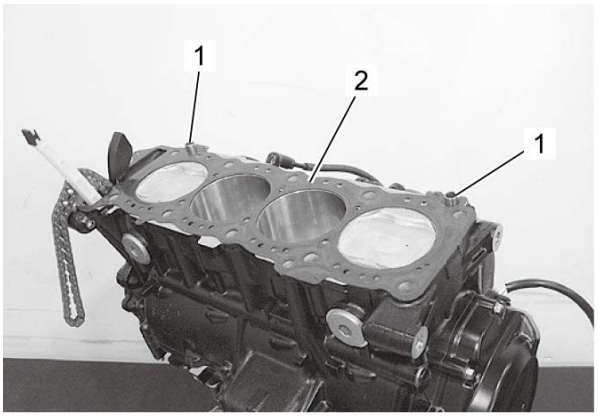

2) Place the cylinder head on the gasket.

NOTE:
When installing the cylinder head, keep the cam chain taut.

3) Apply engine oil to the both side of the washers “A” and thread portion “B” of the bolts before installing the cylinder head bolts (L105).

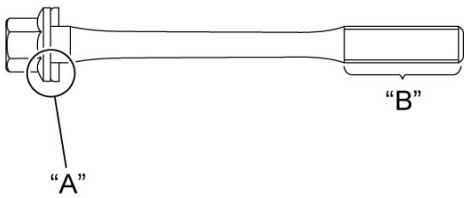

4) Tighten the cylinder head bolts (L105) to the specified torque with a torque wrench sequentially and diagonally.

5) Additionally tighten the cylinder head bolts (1) with the specified angles diagonally using an angular torque gauge.

Tightening torque

Cylinder head bolt (L105) (a): 31 N·m (3.2 kgf-m, 23.0 lbf-ft) → turn clockwise 60°

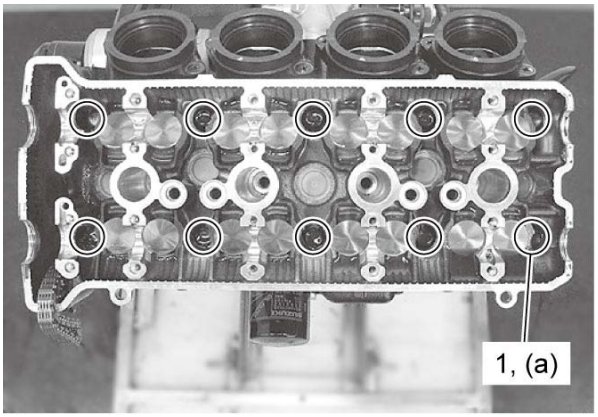

6) Tighten the cylinder head bolts (L50) (1) to the specified torque.

Tightening torque

Cylinder head bolt (L50) (a): 10 N·m (1.0 kgf-m, 7.5 lbf-ft)

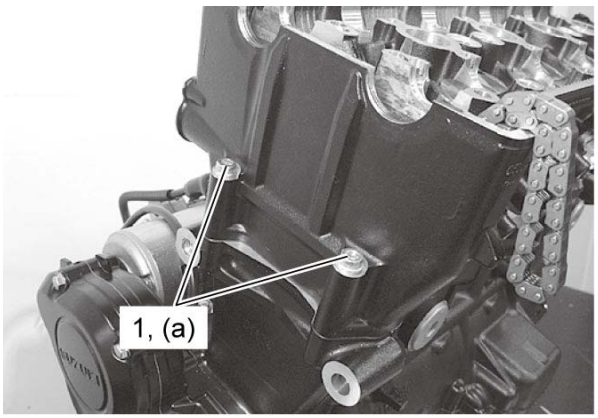

7) Connect the water bypass hose (1).

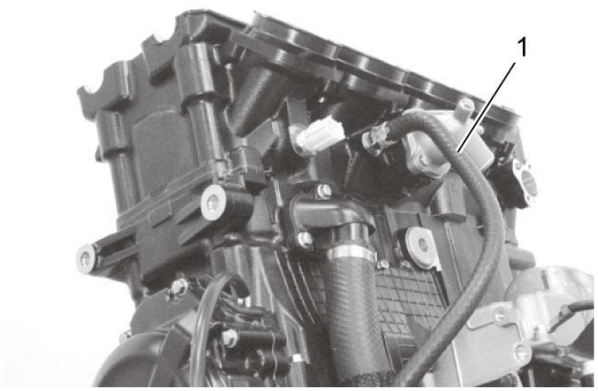

8) Install the camshafts. ☞

Cylinder Head Removal

Refer to ***Engine Assembly Removal*** and ***Cam Chain Tension Adjuster / Camshaft Removal***.

1) Disconnect the water bypass hose (1).

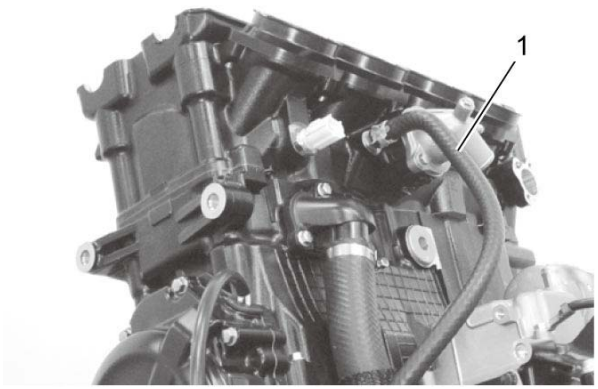

2) Remove the cylinder head bolts (L50) (1).

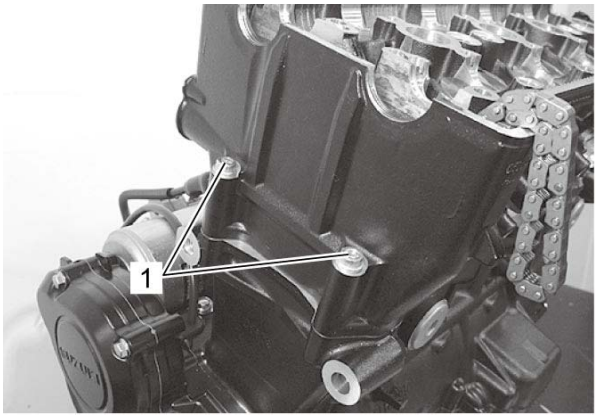

3) Remove the cylinder head bolts (L105) (1).

NOTE:
When loosening the cylinder head bolts, loosen each bolt little by little diagonally.

4) Remove the cylinder head (2).

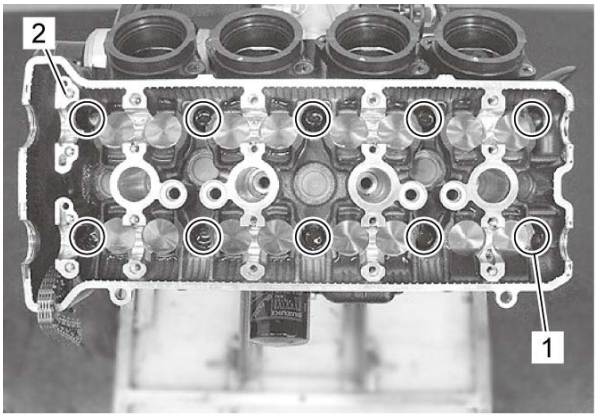

5) Remove the dowel pins (1) and cylinder head gasket (2).

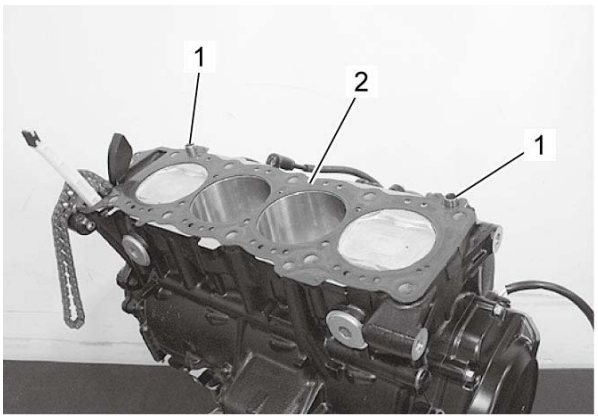

Cylinder Inspection

Refer to ***Balancer Shaft Assembly / Crankshaft / Piston / Cylinder Removal*** and ***Balancer Shaft Assembly / Crankshaft / Piston / Cylinder Installation***.

Cylinder Distortion

Check the gasket surface of the cylinder for distortion. Use a straightedge and thickness gauge. Take clearance readings at several places. If any reading exceeds the service limit, replace the crankcase set.

Special Tool

09900–20803

Cylinder distortion

[Limit]: 0.20 mm (0.0078 in)

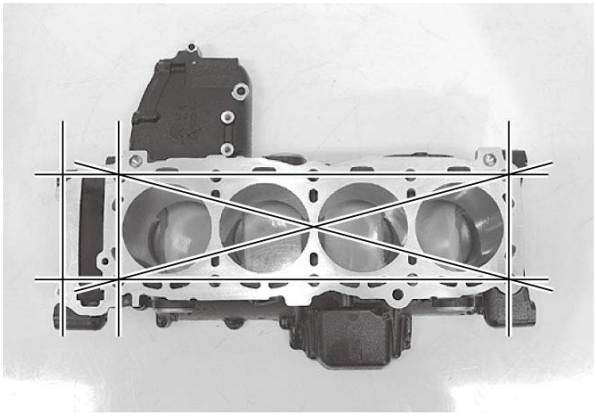

Cylinder Bore

Measure the cylinder bore diameter at six places. If any one of the measurements exceed the limit, overhaul the cylinder and replace the piston with an oversize piston. The remaining cylinders must also be rebored accordingly; otherwise, the imbalance might cause excessive vibration.

Special Tool

(A): 09900–20530

Cylinder bore

[Standard]: 73.400 – 73.415 mm (2.8898 – 2.8903 in)
[Limit]: No nicks or Scratches

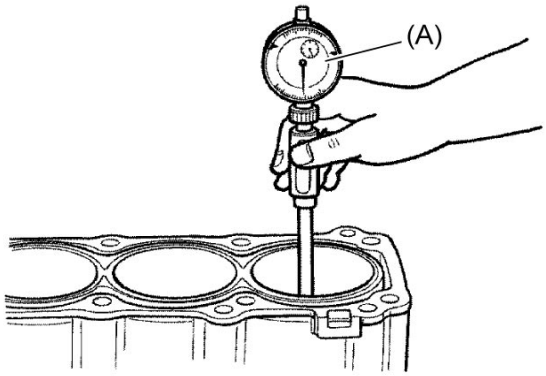

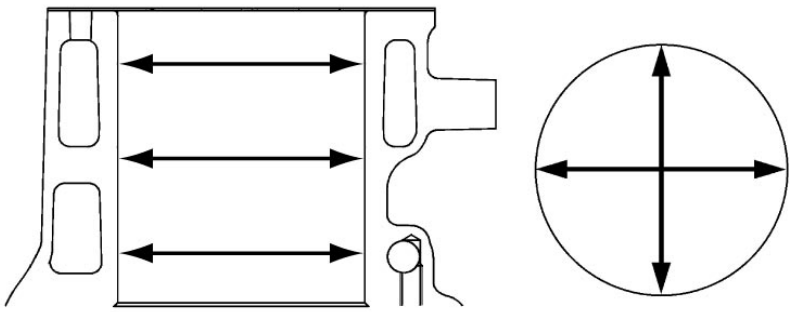

Piston-to-cylinder Clearance

Refer to ***Piston / Piston Ring Inspection***.

Engine Assembly Installation

Install the engine in the reverse order of engine removal. Pay attention to the following points:

- Gradually raise the rear side of the engine assembly, and then put the drive chain on the driveshaft.

NOTICE:
Be careful not to catch the wiring harness between the frame and the engine.

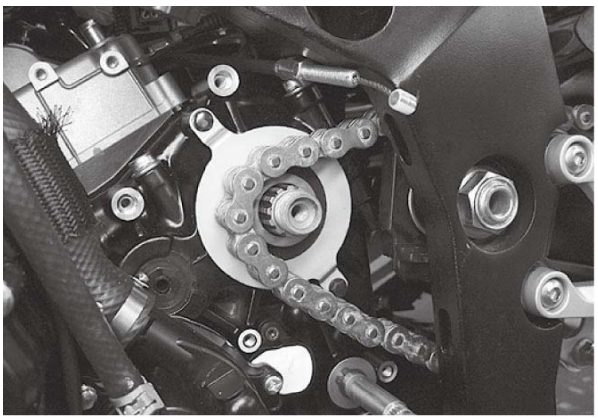

- Install all engine mounting bolts and tighten them temporarily.
- Tighten the engine mounting thrust adjusters (1) to the specified torque.

Tightening torque

Engine mounting thrust adjuster (a): 23 N·m (2.3 kgf-m, 17.0 lbf-ft)

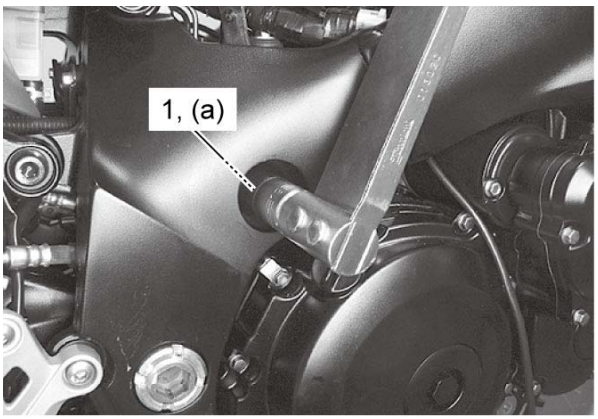

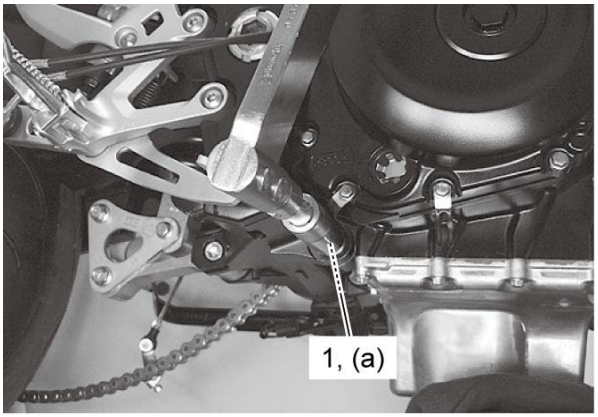

- Tighten the engine mounting thrust adjuster lock-nuts (1) to the specified torque with the special tool.

Tightening torque

Engine mounting thrust adjuster lock-nut (a): 45 N·m (4.6 kgf-m, 33.5 lbf-ft)

Special Tool

(A): 09940–14990

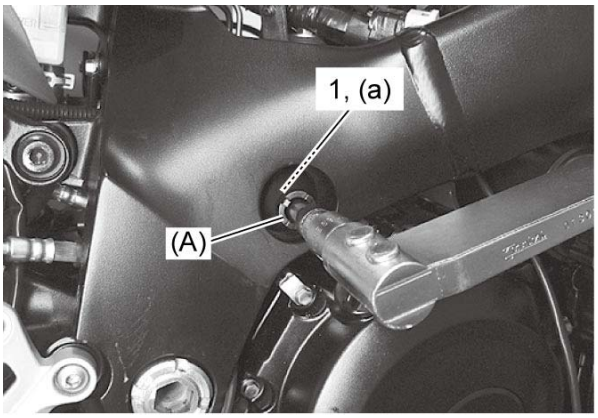

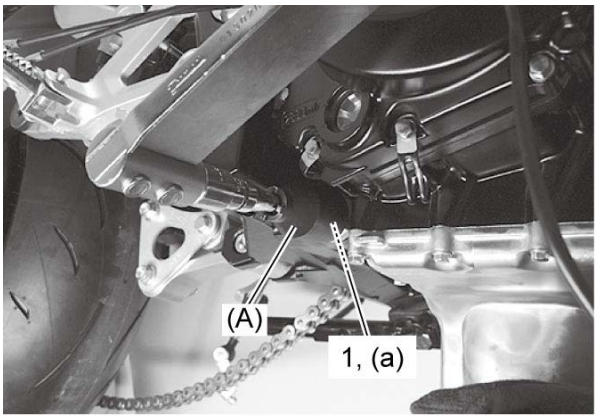

- Tighten all engine mounting bolts and nuts to the specified torque, as shown in the following illustration.

NOTE:
The engine mounting nuts are self-locking. Once the nuts have been removed, they are no longer of any use.

- Tighten the engine mounting pinch bolt to the specified torque, as shown in the following illustration.

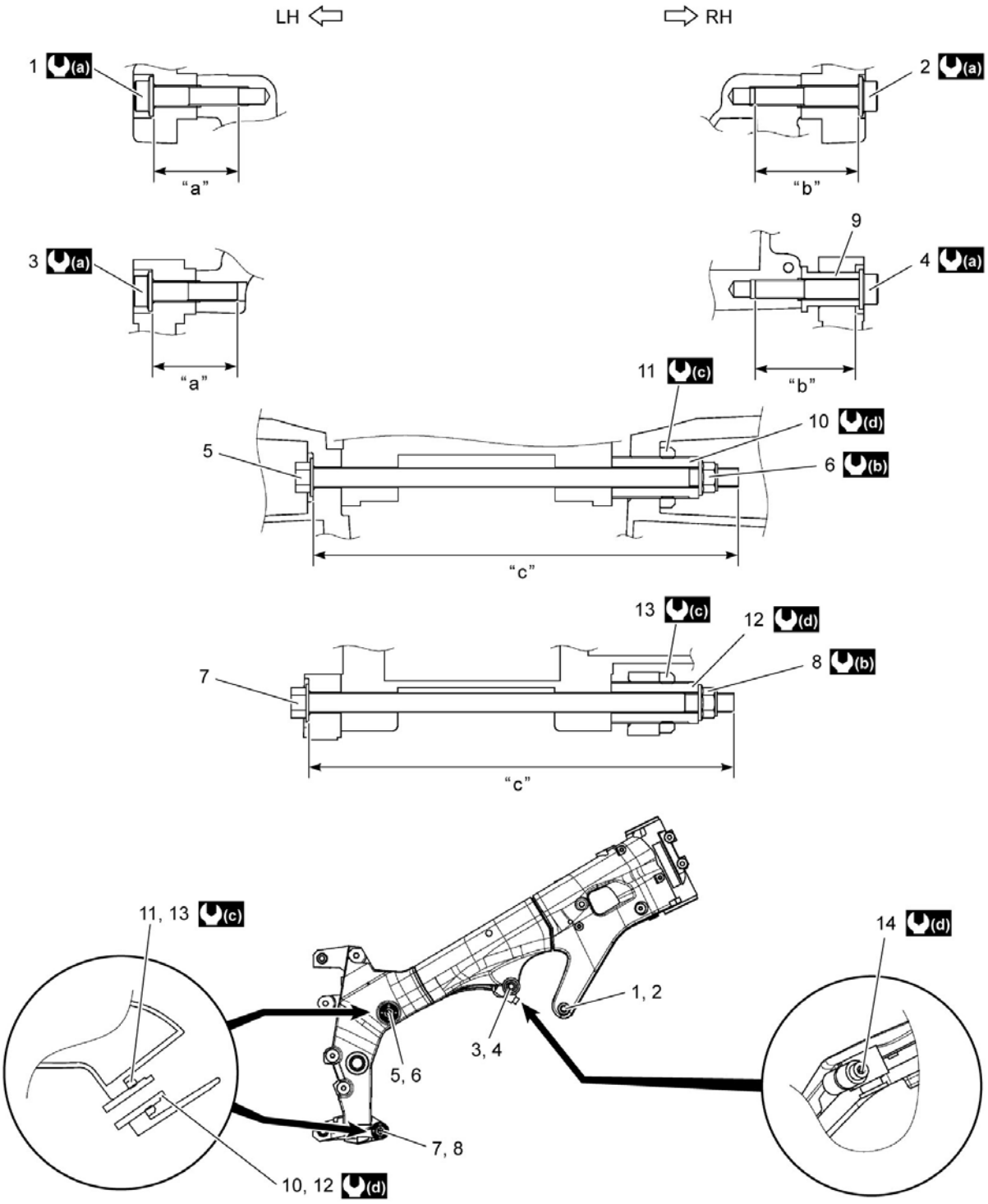

1.	Engine mounting bolt (Front upper, Left)	8.	Engine mounting nut (Rear lower)	“a”:	45 mm (1.8 in)
2.	Engine mounting bolt (Front upper, Right)	9.	Engine mounting spacer	“b”:	55 mm (2.1 in)
3.	Engine mounting bolt (Rear upper, Left)	10.	Engine mounting thrust adjuster (Rear upper)	“c”:	225 mm (8.86 in)
4.	Engine mounting bolt (Rear upper, Right)	11.	Engine mounting thrust adjuster lock-nut (Rear upper)	(a):	55 N·m (5.6 kgf-m, 40.5 lbf-ft)
5.	Engine mounting bolt (Rear upper)	12.	Engine mounting thrust adjuster (Rear lower)	(b):	75 N·m (7.6 kgf-m, 55.5 lbf-ft)
6.	Engine mounting nut (Rear upper)	13.	Engine mounting thrust adjuster lock-nut (Rear lower)	(c):	45 N·m (4.6 kgf-m, 33.5 lbf-ft)
7.	Engine mounting bolt (Rear lower)	14.	Engine mounting pinch bolt	(d):	23 N·m (2.3 kgf-m, 17.0 lbf-ft)

- Install the engine sprocket. Refer to ***Engine Sprocket Removal and Installation***.
- Install the exhaust pipe assembly and muffler. Refer to ***Exhaust Pipe / Muffler Installation***.
- Install the radiator. Refer to ***Radiator / Cooling Fan Motor Removal and Installation***.
- Install the throttle body. Refer to ***Throttle Body Removal and Installation***.
- Install the air cleaner box. Refer to ***Air Cleaner Box Removal and Installation***.
- Check the radiator hose routing. ☞
- Check the wiring harness routing. ☞
- After finishing the engine installation, check the following items.
  - Throttle cable play: ☞
  - Throttle valve synchronization: ☞
  - Clutch cable play: ☞
  - Engine oil leakage: ☞
  - Engine coolant leakage: ☞

Engine Assembly Removal

Before taking the engine out of the frame, wash the engine using a steam cleaner. Engine removal is sequentially explained in the following steps:

1) Remove the front seat. ☞

2) Disconnect the battery (–) lead wire (1).

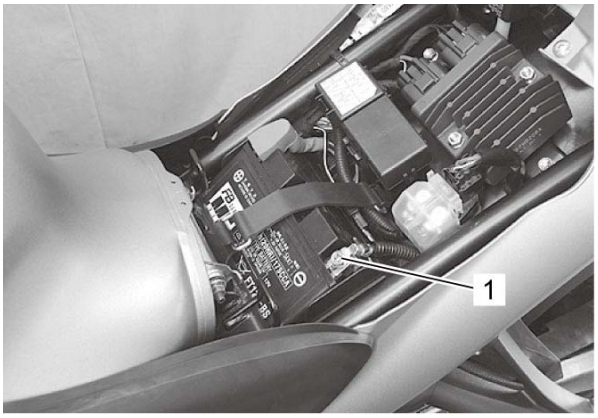

3) Jack up the motorcycle and fix it for safety.

4) Drain engine oil. ☞

5) Drain engine coolant. ☞

6) Remove the air cleaner box. ☞

7) Remove the throttle body assembly. ☞

8) Remove the oil cooler water outlet hose (1).

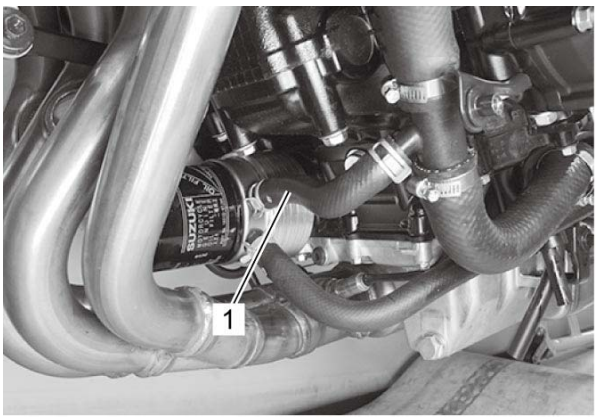

9) Remove the radiator assembly. ☞

10) Disconnect the air bleed hose (1) and radiator inlet hose (2).

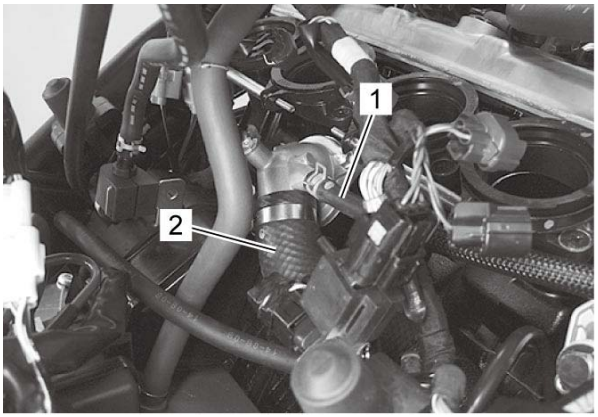

11) Remove the EVAP canister (If equipped). Refer to ***EVAP Control System Removal and Installation (If Equipped)***.

12) Release the clamp (1) and remove the fuel tank breather hose (EVAP canister drain hose (If equipped)) (2) and water drain hose (3) from engine.

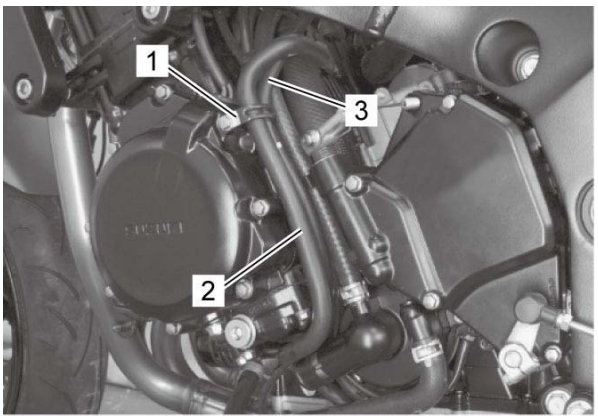

13) Remove the left radiator heat shield (1) and right heat shield clip (2) (GSX-S1000F/FA).

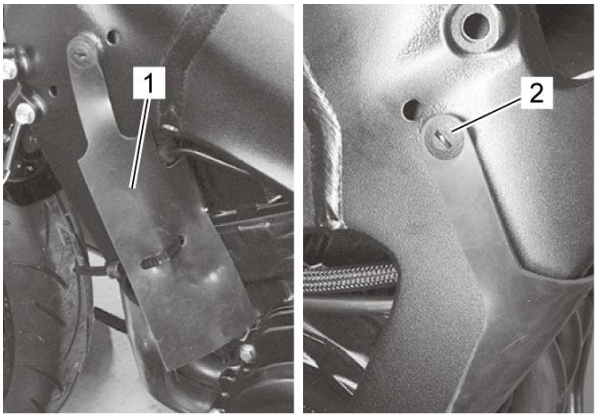

14) Remove the horn (1) and radiator heat shield (2).

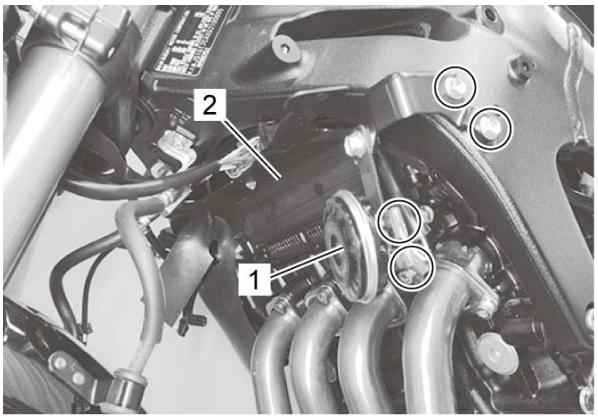

15) Remove the exhaust system components. Refer to ***Exhaust Pipe / Muffler Removal*** and ***Exhaust Pipe / Muffler Installation***.

16) Remove the radiator lower bracket (1) with reservoir tank (2), reservoir tank inlet hose (3) and reservoir tank over flow hose (4).

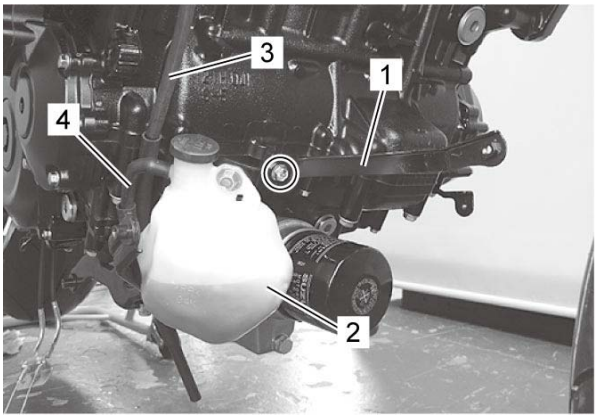

17) Disconnect the oil pressure switch lead wire (1) and release the clamps (2). ☞

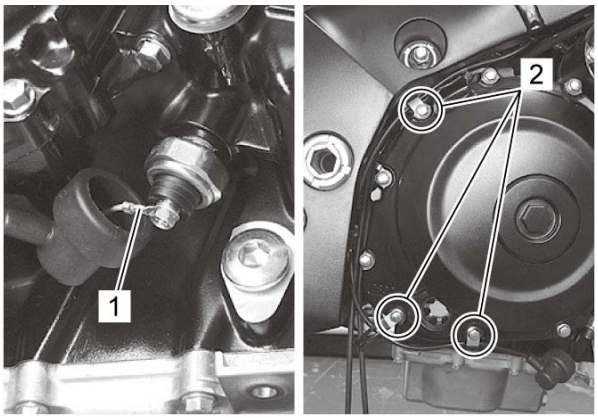

18) Disconnect the GP switch lead wire coupler (1), generator lead wire coupler (2) and ECT sensor coupler (3).

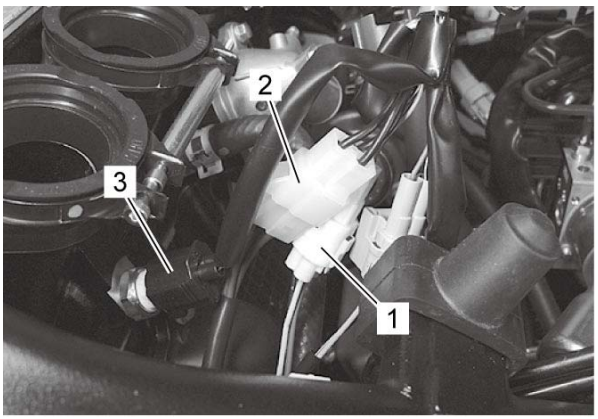

19) Remove the side-stand switch (1).

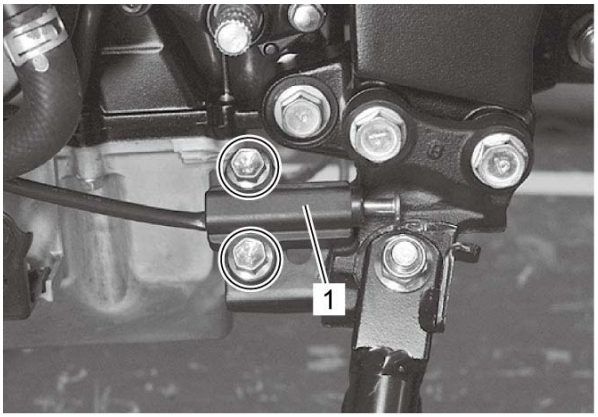

20) Disconnect the starter motor lead wire (1) and engine ground lead wire (2).

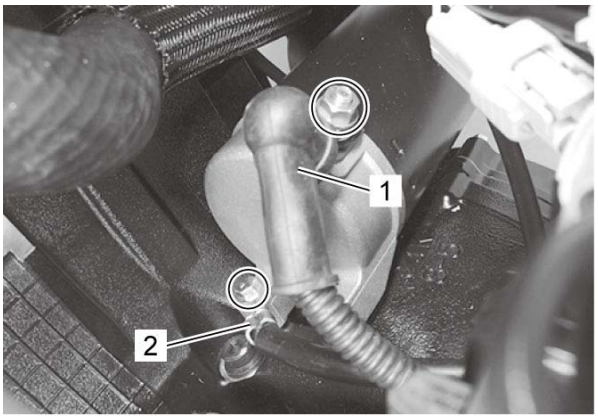

21) Remove the crankcase breather (PCV) hose (1).

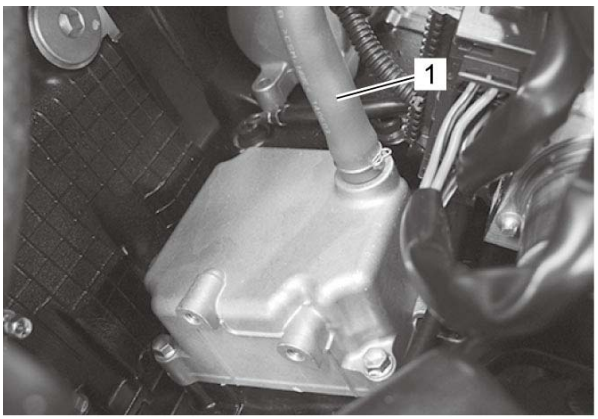

22) Disconnect the CKP sensor lead wire coupler (1).

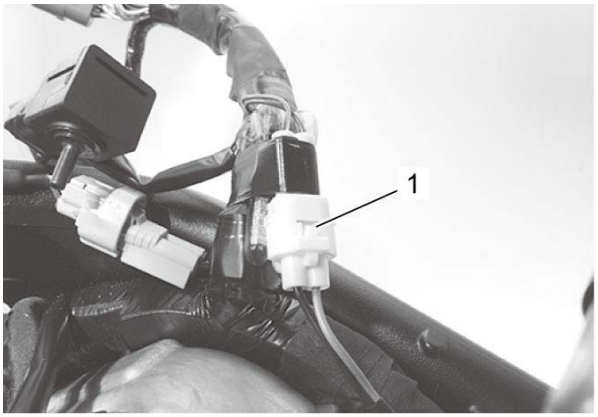

23) Disconnect the PAIR solenoid valve coupler (1) and ignition coil couplers (2).
24) Remove the ignition coils (3). ☞

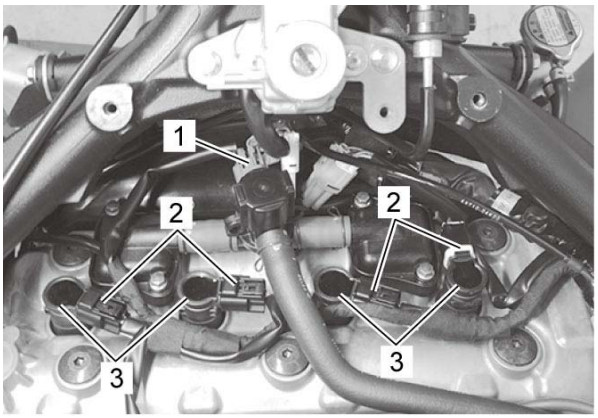

25) Remove the engine sprocket cover (1). Refer to ***Clutch Push Rod (Left) / Clutch Release Camshaft Removal and Installation***.

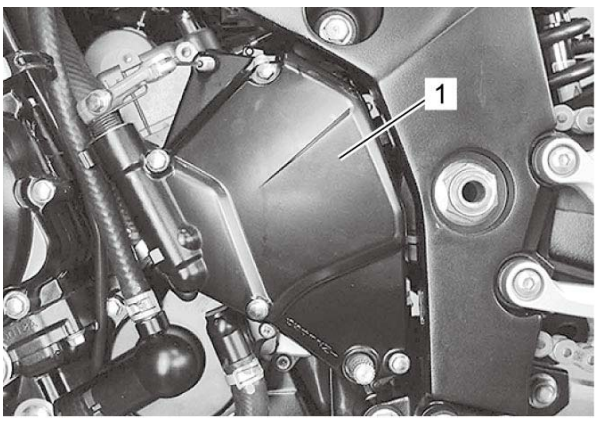

26) Remove the dowel pins (1) and clutch push rod (2).

27) Remove the engine sprocket (3). Refer to ***Engine Sprocket Removal and Installation***.

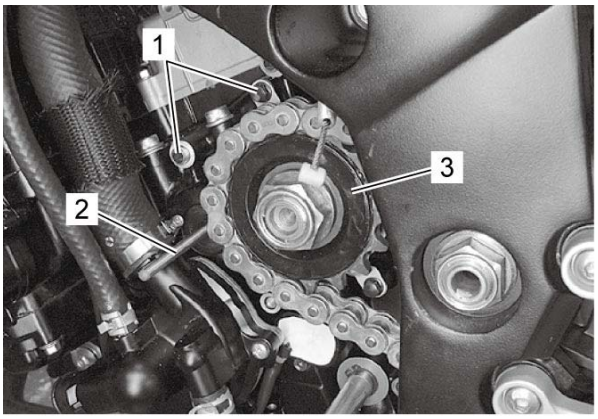

28) Support the engine with a proper jack.

29) Loosen the engine mounting pinch bolt (1) (RH).

30) Remove the engine mounting bolts (2) (RH).

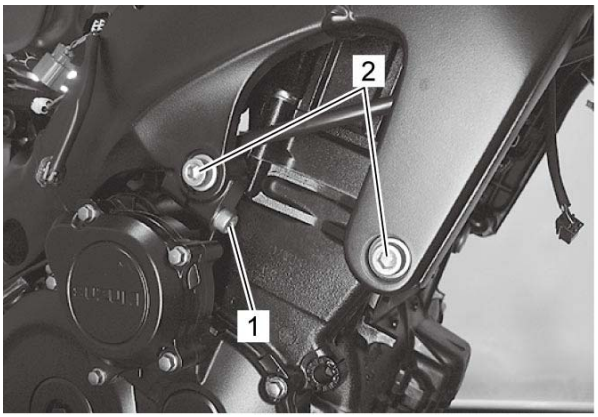

31) Remove the engine mounting bolts (1) (LH).

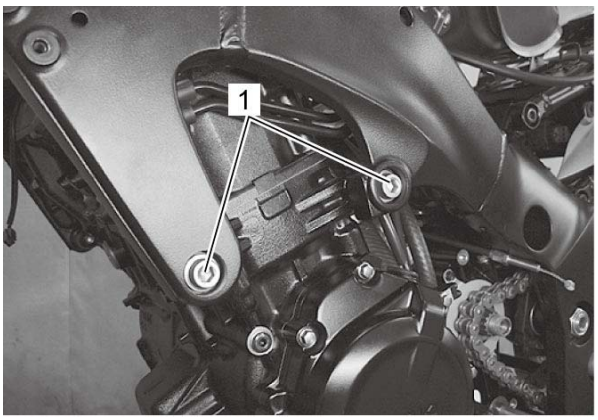

32) Remove the engine mounting nut (1).
33) Remove the engine mounting thrust adjuster lock-nut (2) with the special tool.
34) Loosen the engine mounting thrust adjuster (3) fully.

Special Tool

(A): 09940–14990

NOTE:
Do not remove the engine mounting bolt at this stage.

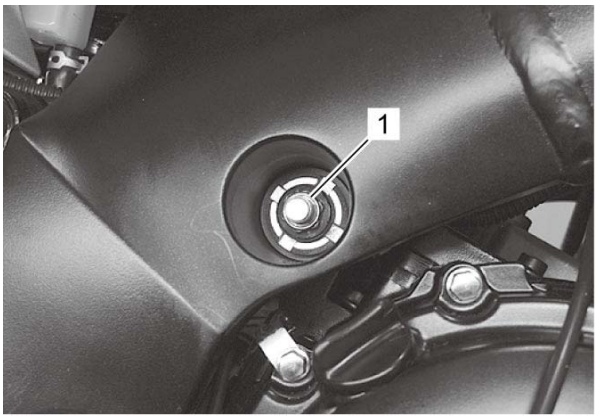

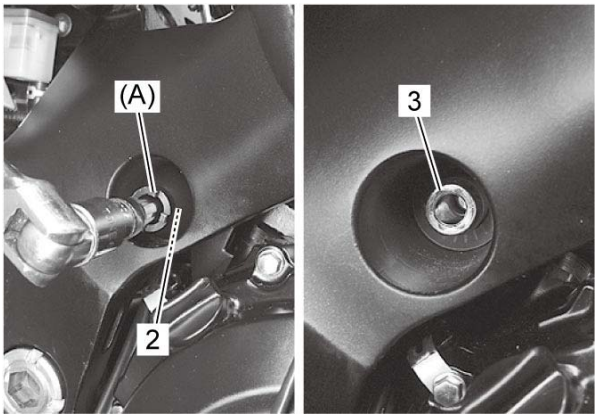

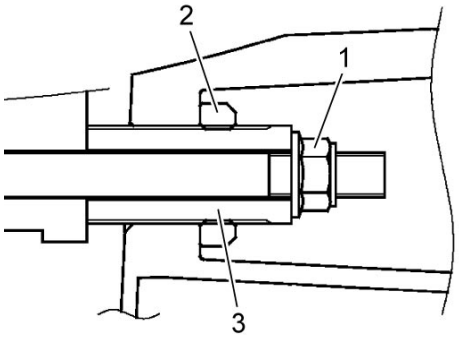

35) Remove the engine mounting nut (1).
36) Loosen the engine mounting thrust adjuster lock-nut (2) with the special tool.
37) Loosen the engine mounting thrust adjuster (3) fully.

Special Tool
(A): 09940–14990

NOTE:
Do not remove the engine mounting bolt at this stage.

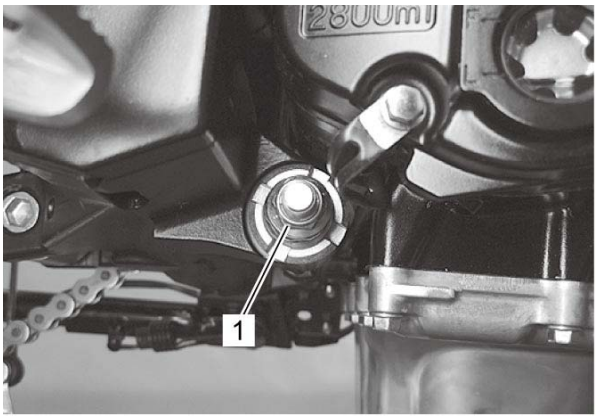

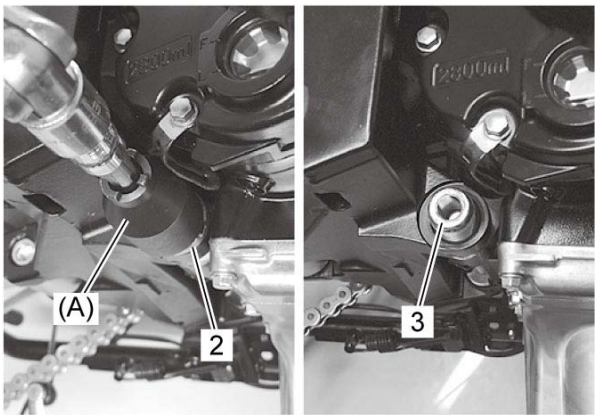

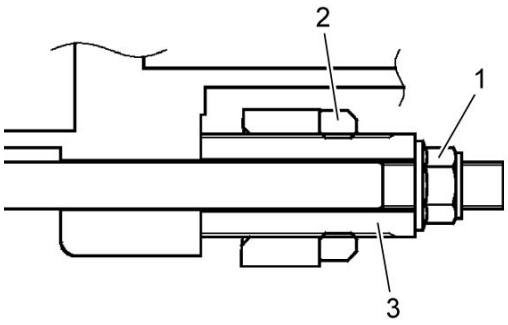

38) Remove the engine mounting bolts and gradually lower the front side of the engine. Then, take off the drive chain from the driveshaft.

39) Remove the engine assembly.

Intake Pipe Removal and Installation

Refer to ***Throttle Body Removal and Installation***.

Removal

1) Remove the intake pipe clamps (1).
2) Remove the intake pipes (2).

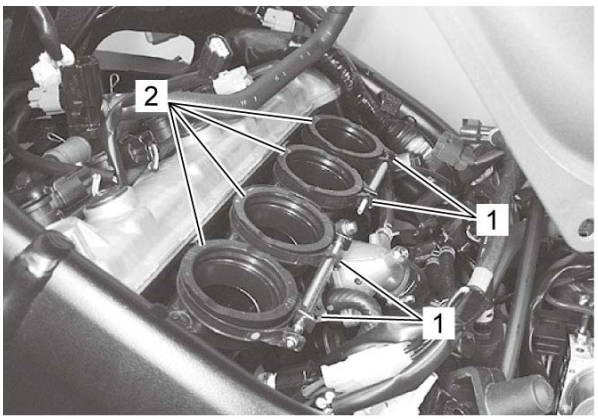

Installation

Install the intake pipe in the reverse order of removal. Pay attention to the following point:

- Apply grease to the new O-ring (1) and install the intake pipe.

NOTE:
Face the "UP" mark (2) on the intake pipe to upper.

"A": Grease 99000–25011 (SUZUKI SUPER GREASE A)

Tightening torque

Intake pipe screw (a): 8.5 N·m (0.87 kgf-m, 6.30 lbf-ft)

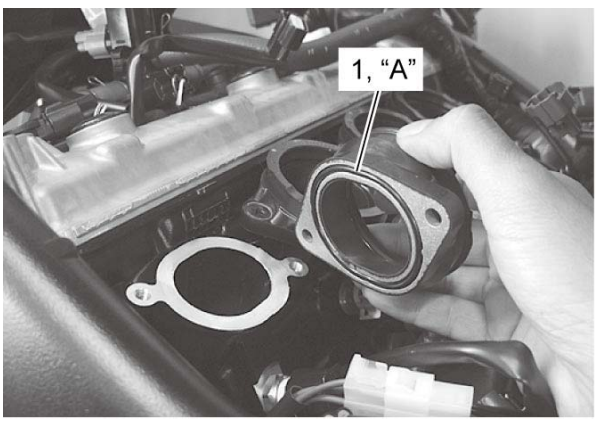

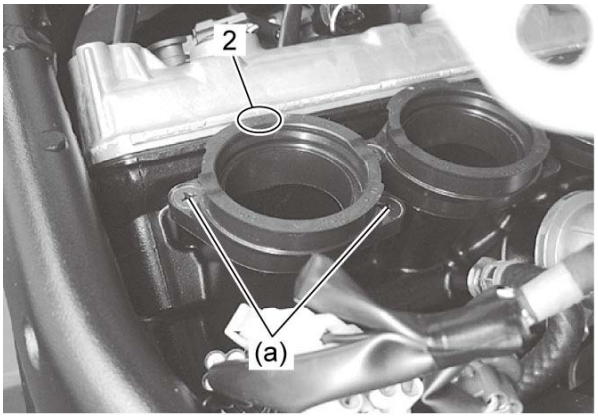
2
(a)

Intake System Construction

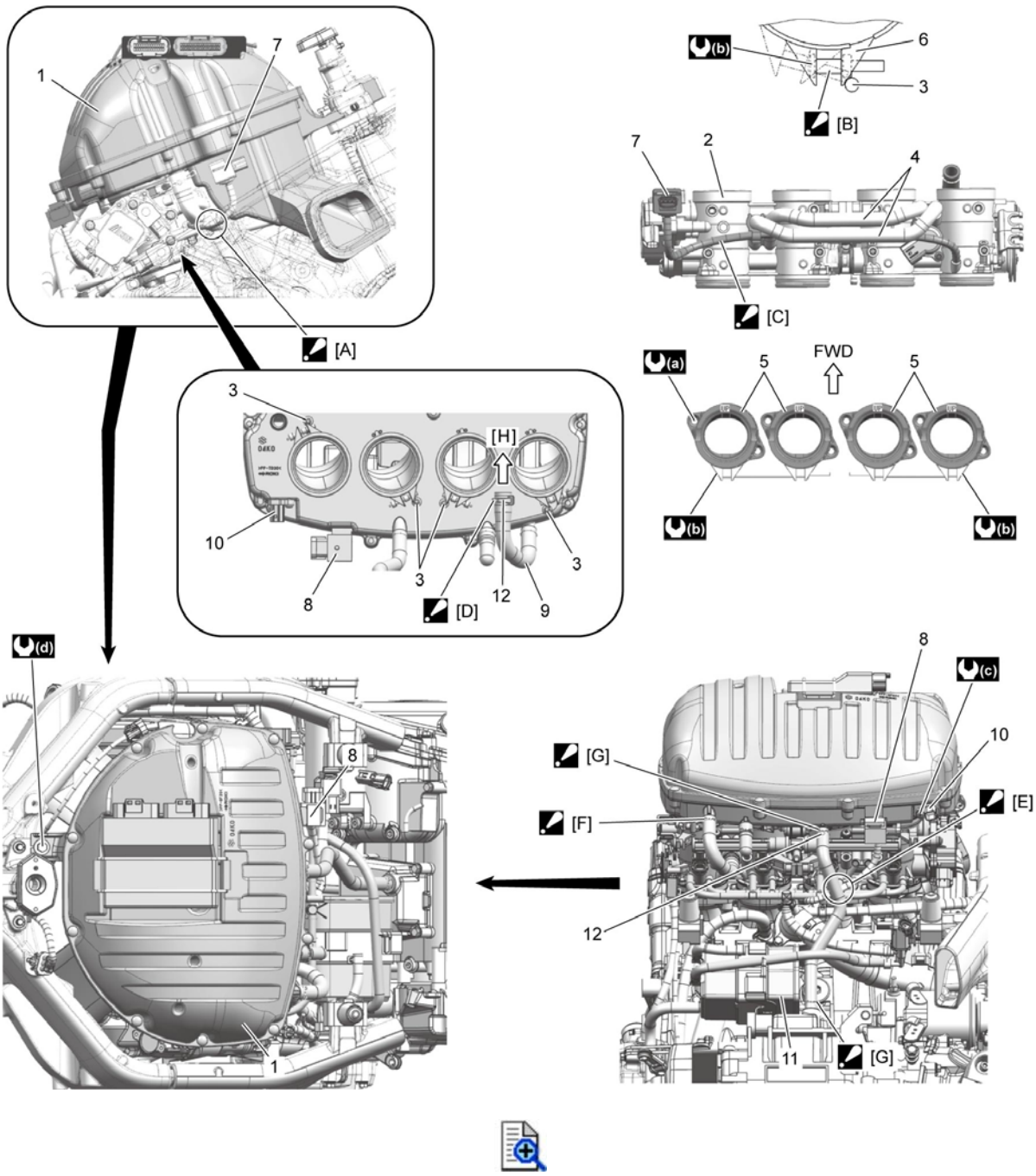

[A]:	Pass the vacuum hose under the PAIR hose.	1.	Air cleaner box	9.	ISC valve hose
[B]:	Do not contact the screw to the stopper.	2.	Throttle body assembly	10.	IAT sensor
[C]:	Pass the vacuum hose between the throttle body and ISC delivery hose.	3.	Stopper	11.	EVAP canister (if equipped)
[D]:	Face the clamp end downward.	4.	ISC delivery hose	12.	White mark

[E]:	Pass the vacuum hose between the PCV hose and throttle body.	5.	Intake pipe	(a):	8.5 N·m (0.87 kgf-m, 6.30 lbf-ft)
[F]:	Face the clamp end backward.	6.	Air cleaner outlet hose tube clamp	(b):	1.5 N·m (0.15 kgf-m, 1.10 lbf-ft)
[G]:	Face the clamp end backward. Position the clamp at 4 – 8 mm (0.16 – 0.3 in) from hose end.	7.	AP sensor	(c):	1.3 N·m (0.13 kgf-m, 0.95 lbf-ft)
[H]:	To throttle body	8.	IAP sensor	(d):	5.5 N·m (0.56 kgf-m, 4.05 lbf-ft)

Piston / Piston Ring Inspection

Refer to ***Piston Ring Removal and Installation***.

Piston Diameter

Measure the piston diameter using the micrometer at 8 mm (0.3 in) “a” from the skirt end. If the piston diameter is less than the service limit, replace the piston.

Special Tool

(A): 09900–20203

Piston diameter

Measure at 8 mm (0.3 in) from the skirt end
[Limit]: 73.280 mm (2.8851 in)

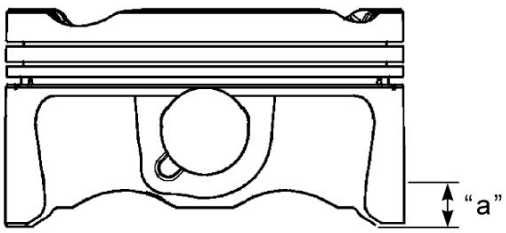

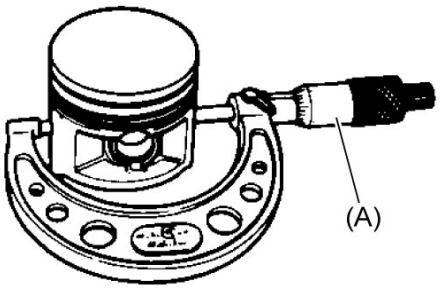

Piston-to-cylinder Clearance

Subtract the piston diameter from the cylinder bore diameter. If the piston-to-cylinder clearance exceeds the service limit, replace both the cylinder and the piston.

Piston-to-cylinder clearance

[Limit]: 0.120 mm (0.0047 in)

Piston Ring-to-groove Clearance

Measure the side clearances of the 1st and 2nd piston rings using the thickness gauge. If any of the clearances exceed the limit, replace both the piston and piston rings.

Special Tool

(A): 09900–20803
(B): 09912–66310

Piston ring to groove clearance

1st [Limit]: 0.180 mm (0.0070 in)
2nd [Limit]: 0.150 mm (0.0059 in)

Piston ring groove width

1st [Standard]: 0.81 – 0.83 mm (0.0319 – 0.0326 in)
2nd [Standard]: 0.81 – 0.83 mm (0.0319 – 0.0326 in)
Oil [Standard]: 1.51 – 1.53 mm (0.0595 – 0.0602 in)

Piston ring thickness

1st [Standard]: 0.77 – 0.79 mm (0.0304 – 0.0311 in)
2nd [Standard]: 0.77 – 0.79 mm (0.0304 – 0.0311 in)

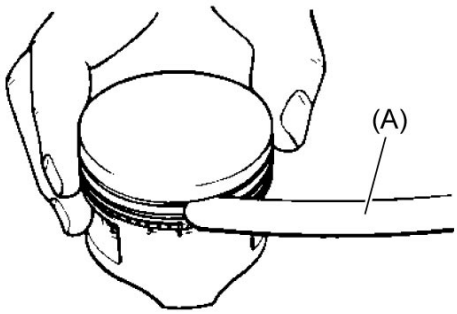

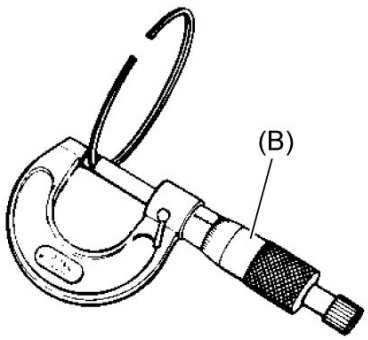

Piston Ring Free End Gap and Piston Ring End Gap

Measure the piston ring free end gap using vernier calipers. Next, fit the piston ring squarely into the cylinder and measure the piston ring end gap using the thickness gauge. If any of the measurements exceed the service limit, replace the piston ring with a new one.

Special Tool

(A): 09900–20102

Piston ring free end gap

1st [Limit]: 7.2 mm (0.29 in)
2nd [Limit]: 6.4 mm (0.26 in)

Special Tool

(B): 09900–20803

Piston ring end gap

1st [Limit]: 0.50 mm (0.019 in)
2nd [Limit]: 0.50 mm (0.019 in)

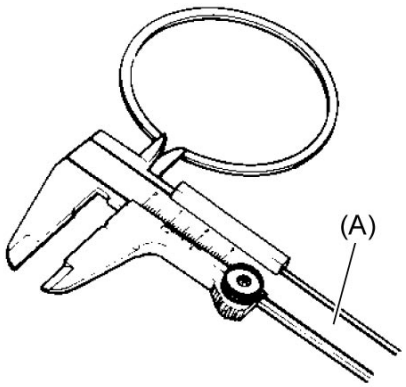

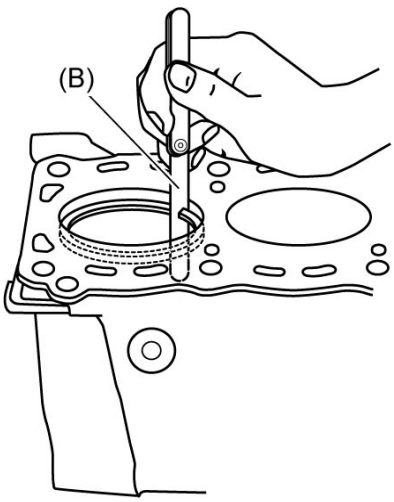

Piston Pin and Pin Bore

Measure the piston pin bore inside diameter using the small bore gauge. If either is out of specification or the difference between these measurements surpass limits, replace the piston.

Special Tool

(A): 09900–20602
(B): 09900–22401

Piston pin bore I.D.

[Limit]: 16.030 mm (0.6311 in)

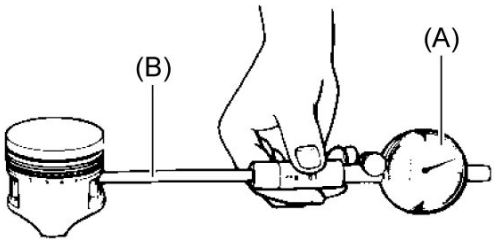

Measure the piston pin outside diameter at three positions using the micrometer. If any of the measurements are out of specification, replace the piston pin.

Special Tool

(A): 09912–66310

Piston pin O.D.

[Limit]: 15.980 mm (0.6292 in)

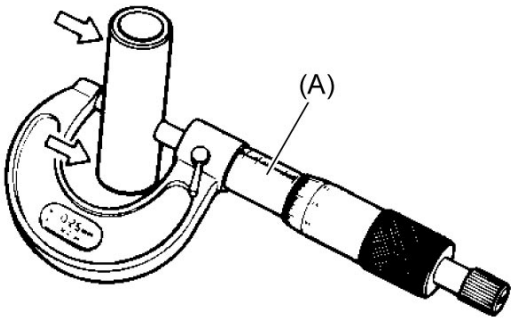

Piston Ring Removal and Installation

Removal

1) Remove the piston. Refer to ***Balancer Shaft Assembly / Crankshaft / Piston / Cylinder Removal***.

2) Carefully spread the ring opening with your thumbs and then push up the opposite side of the 1st ring to remove it.

NOTE:
Do not expand the piston ring excessively since it is apt to be broken down.

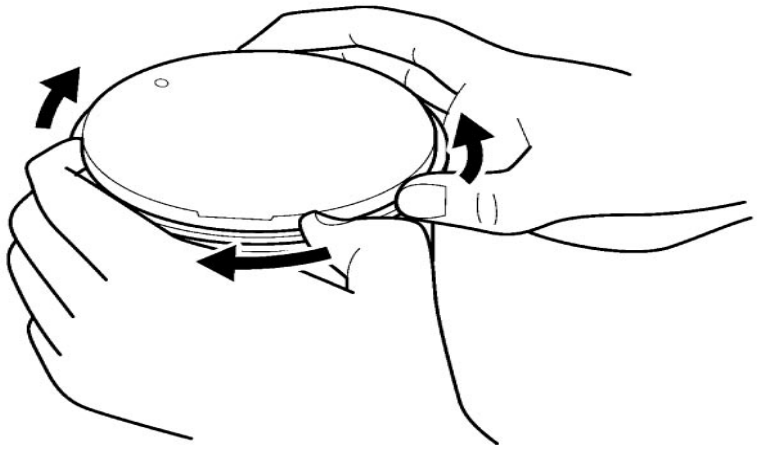

3) Remove the 2nd ring and oil ring in the same manner.

Installation

NOTE:
- **When installing the piston ring, be careful not to damage the piston.**
- **Do not expand the piston ring excessively since it is apt to be broken down.**

1) Install the piston rings in the order of the oil ring, 2nd ring and 1st ring.
a) The first member to go into the oil ring groove is the spacer (1).
After placing the spacer, fit the two side rails (2).

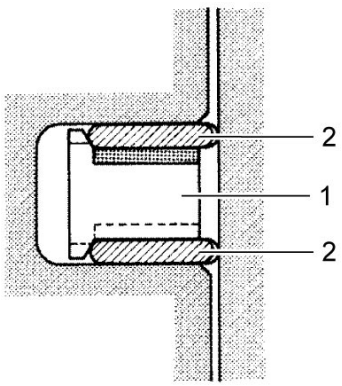

⚠CAUTION:
When installing the spacer, be careful not to allow its two ends to overlap in the groove.

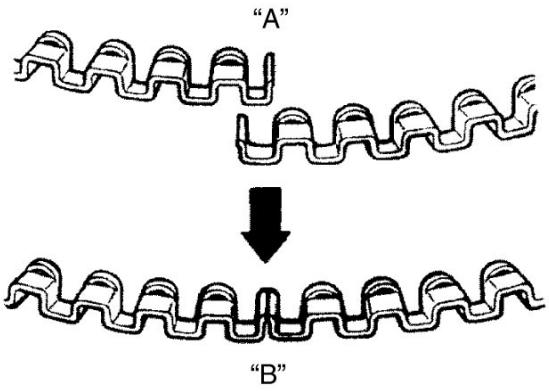

"A":	INCORRECT	"B":	CORRECT

b) Install the 2nd ring (1) and 1st ring (2) to piston.

NOTE:
1st ring (2) and 2nd ring (1) differ in shape.

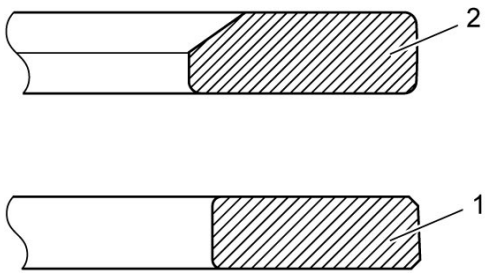

NOTE:
Face the side with the stamped mark upward when assembling.

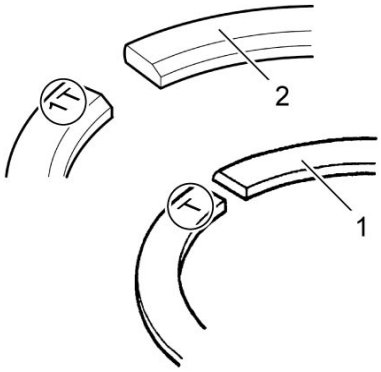

2) Position the gaps of the three rings and side rails as shown. Before inserting piston into the cylinder, check that the gaps are so located.

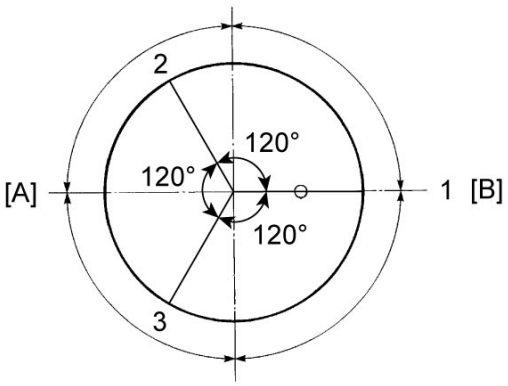

[A]:	IN
[B]:	EX
1.	1st ring and upper side rail
2.	Spacer
3.	2nd ring and lower side rail

3) Install each piston and piston pin. ☞

Throttle Body Components

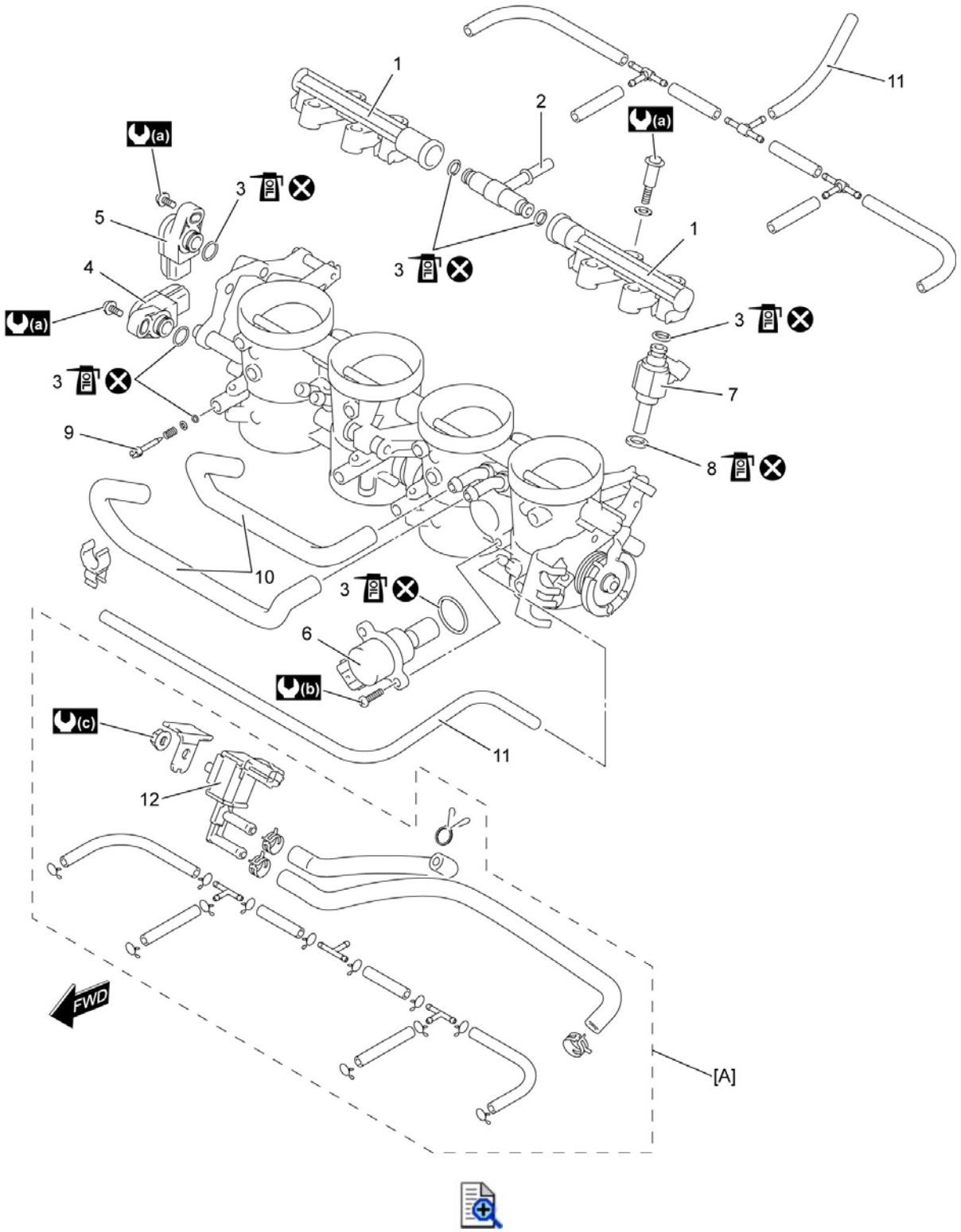

[A]:	If equipped	5.	STP sensor	10.	ISC delivery hose	(c):	10 N·m (1.0 kgf-m, 7.5 lbf-ft)

1.	Fuel delivery pipe	6.	ISC valve	11.	Vacuum hose	 :	Apply engine oil.
2.	Nipple joint	7.	Fuel injector	12.	EVAP system purge control solenoid valve	 :	Do not reuse.
3.	O-ring	8.	Cushion seal	 :	3.5 N·m (0.36 kgf-m, 2.60 lbf-ft)		
4.	TP sensor	9.	Air screw	 :	2 N·m (0.20 kgf-m, 1.50 lbf-ft)		

Throttle Body Disassembly and Reassembly

Refer to ***Throttle Body Removal and Installation***.
Reference: Throttle Body Components

Disassembly

NOTICE:

- **Identify the position of each removed part. Organize the parts in their respective groups so that they can be reinstalled in their original positions.**
- **Never remove the STVA (1).**



- **Never remove the throttle valves (1) and secondary throttle valves (2).**

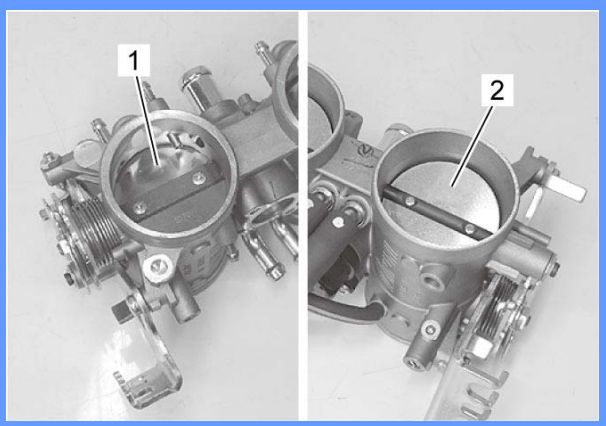

- **These adjusting screws (1) and (2) are factory-adjusted at the time of delivery and therefore avoid removing of turning it unless otherwise necessary.**

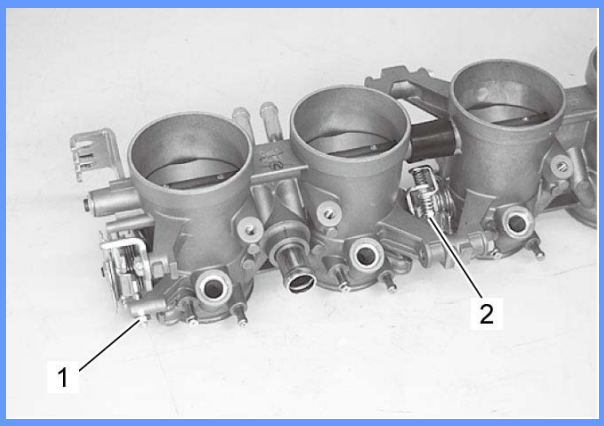

1) Disconnect the fuel feed hose (1), ISC valve hose (2) and vacuum hoses (3).
2) Disconnect the purge hoses (4). (If equipped)

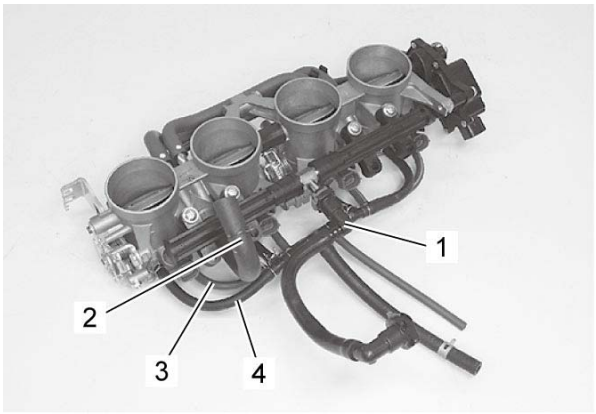

3) Remove the fuel delivery pipe assembly (1). Refer to ***Fuel Injector / Fuel Delivery Pipe Removal and Installation***.

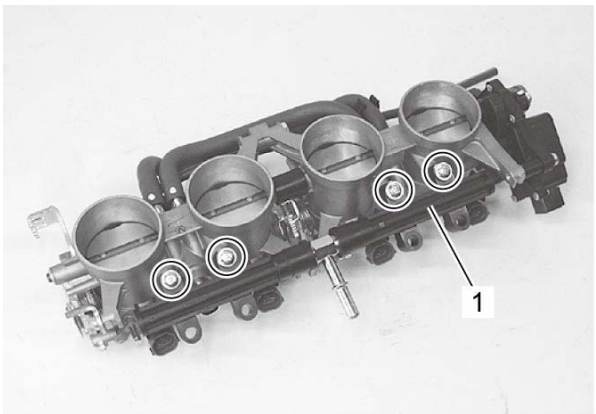

4) Disconnect the ISC delivery hoses (1) and vacuum hose (2).

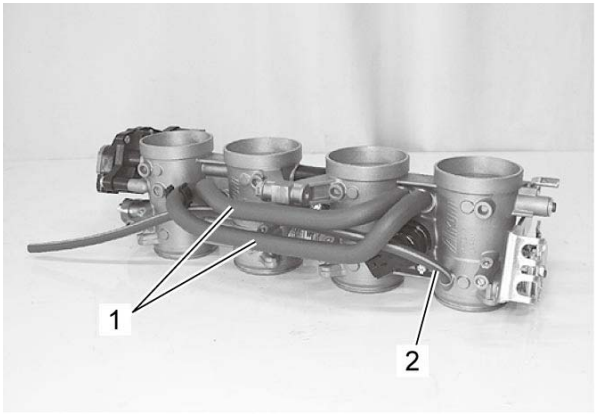

5) Remove the ISC valve (1). ☞

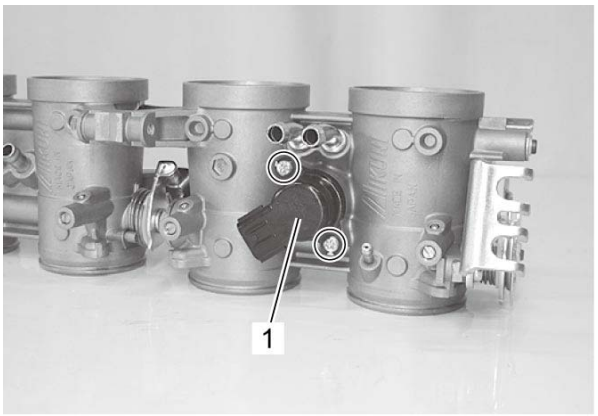

6) Remove the TP sensor (1). ☞

7) Remove the STP sensor (2). ☞

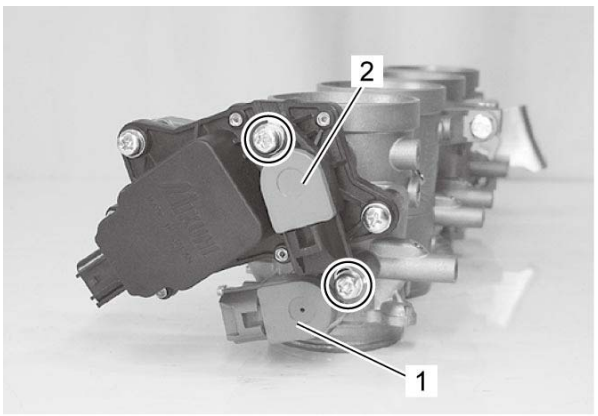

Reassembly

Reference: Throttle Body Inspection and Cleaning

1) Install the STP sensor. ☞

2) Check the STV operating smoothly.

3) Adjust the position of STP sensor, if necessary. ☞

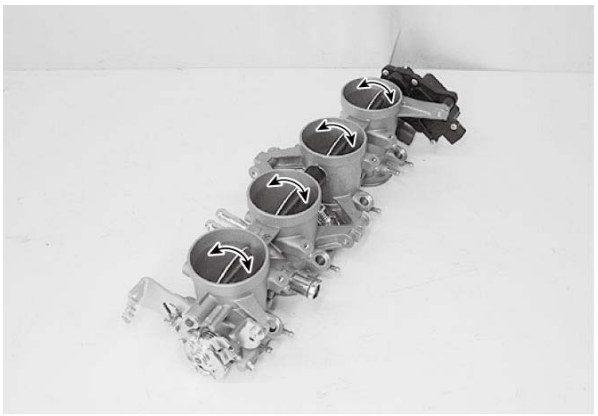

4) Install the TP sensor. ☞

5) Check the throttle valve operating smoothly.

6) Adjust the position of TP sensor, if necessary. ☞

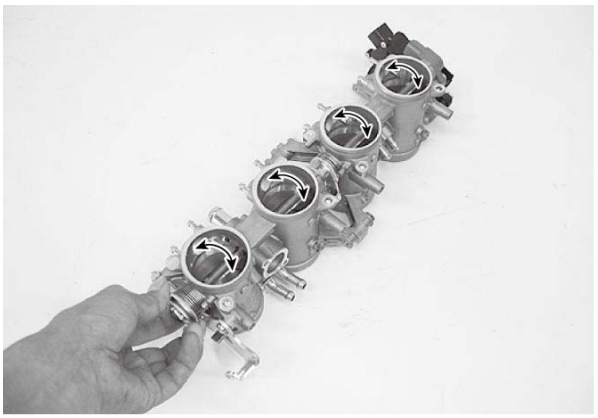

7) Install the ISC valve (1). ☞



8) Connect the vacuum hose (1) and ISC delivery hoses (2).

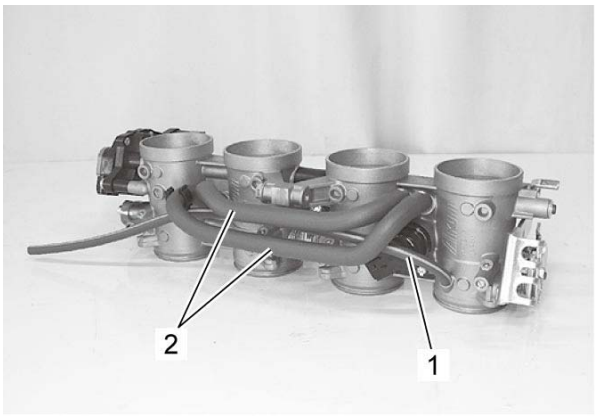

9) Install the fuel delivery pipe assembly (1). ☞

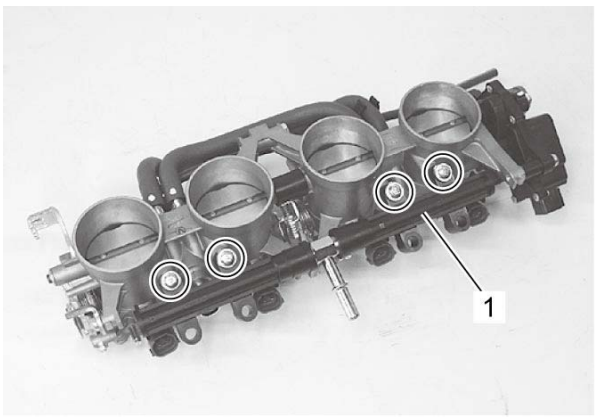

10) Connect the purge hoses (1) (If equipped).

11) Connect the vacuum hoses (2), ISC valve hose (3) and fuel feed hose (4).

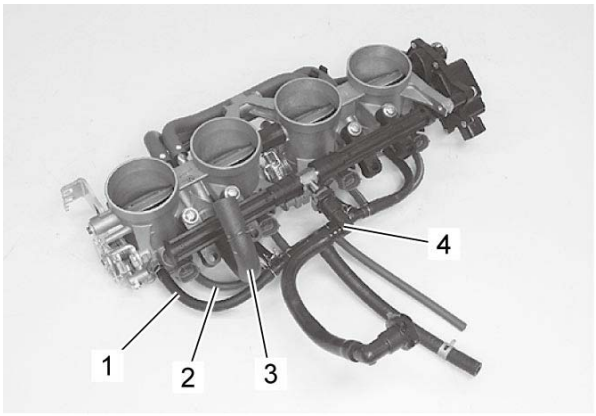
4
1
2
3

Throttle Body Inspection and Cleaning

Refer to ***Throttle Body Disassembly and Reassembly***.

Inspection

Check following items for any defects or clogging. Replace the damaged part or throttle body, if necessary.

- O-rings
- Throttle valves
- Secondary throttle valves
- Vacuum hoses
- ISC valve hoses
- Fuel delivery pipes
- Cushion seals
- Fuel injectors

Cleaning

- Plug the sensor hole(s) in the main bore with tape or the like.
- Clean the main bore, throttle valve and passage(s) using a cotton swab moistened with a carburetor cleaning chemical.

NOTICE:

- **Some carburetor cleaning chemicals are very corrosive. Always follow the chemical manufacturer's instructions for proper use, handling and storage.**
- **Do not dip the throttle body in a carburetor cleaning chemical or do not splay the cleaning chemical directly to the throttle valve. Cleaning chemical will penetrate into electronic parts resulting in cause of malfunction.**
- **Do not use wire to clean passages. Wire may damage them.**
- **If the throttle valve is molybdenum-coated, avoid applying cleaning chemical to the coated surfaces. Cleaning chemical loosens the coating, so the air-tightness of the throttle valve would be impaired.**
- **Do not apply any cleaning chemical to parts made of rubber and plastic materials. Cleaning chemical may damage these parts.**

Throttle Body Removal and Installation

Reference: Intake System Construction

Removal

1) Lift and support the fuel tank. ☞

2) Remove the air cleaner box. ☞

3) Disconnect the fuel feed hose (1). ☞

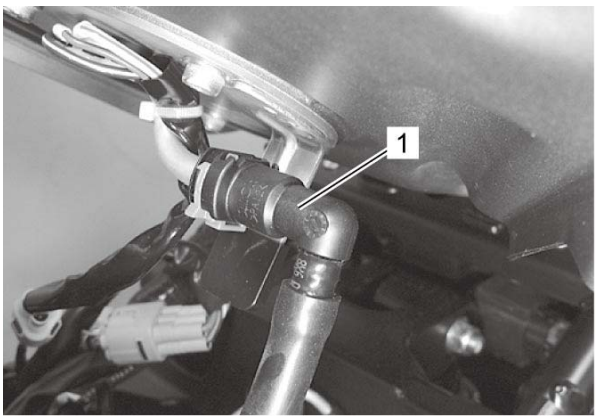

4) Disconnect the vacuum hoses (1).



5) Remove the clamps (1) and disconnect the fuel injector couplers (2).

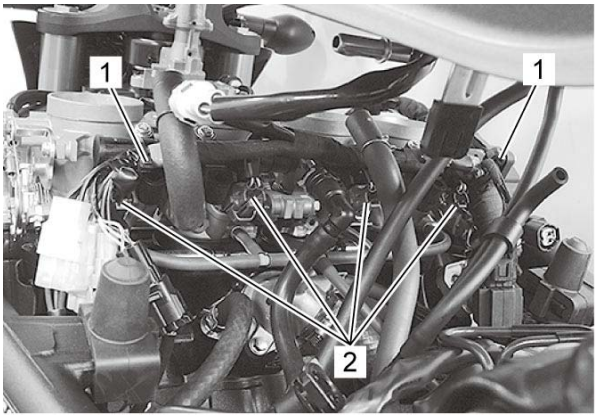

6) Disconnect the purge hose No. 2 (1) (If equipped).

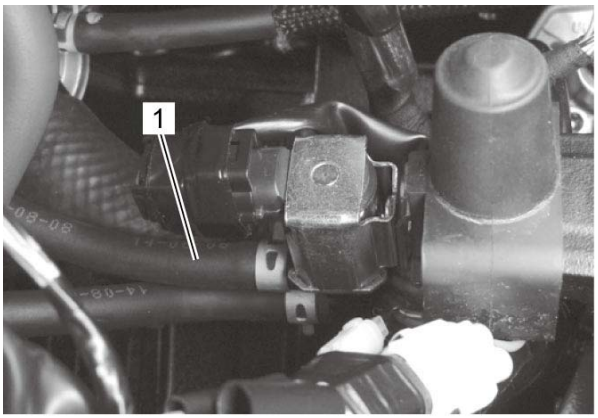

7) Disconnect the ISC valve coupler (1).

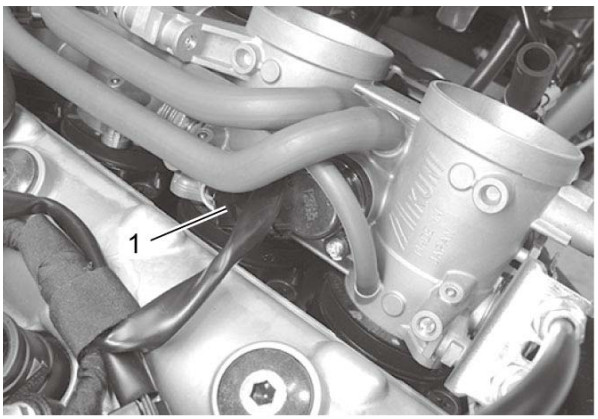

8) Disconnect the STVA coupler (1), TP sensor coupler (2), STP sensor coupler (3) and remove the fasteners (4).

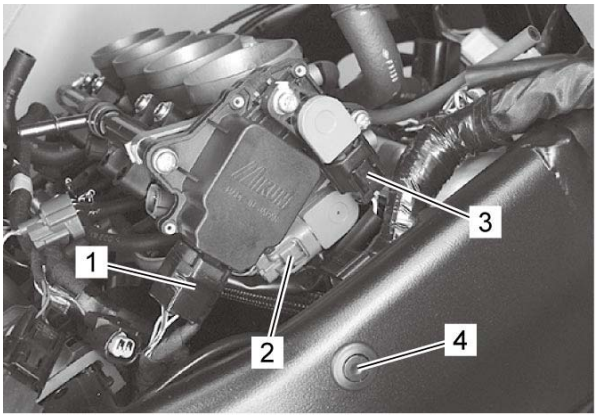

9) Loosen the intake pipe screws (1) and move the throttle body.

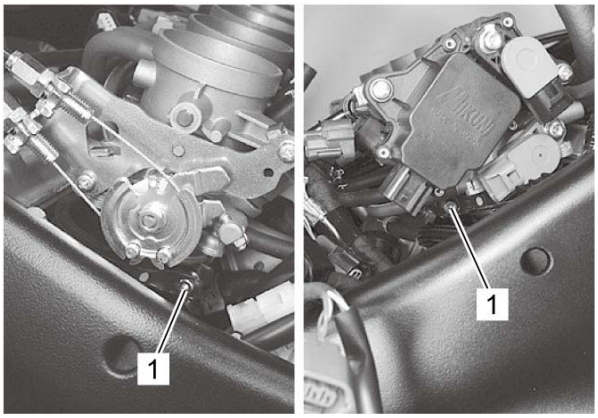

10) Disconnect the throttle cables (1).

11) Remove the throttle body (2).

NOTICE:

- **After disconnecting the throttle cables, do not snap the throttle valve from the open to full close. It may cause damage to the throttle valve and throttle body.**
- **If foreign materials like mud and sand are adhered to the intake pipe or the throttle body, they are likely to get into the intake port. When foreign materials like mud or sand are adhered, remove them before starting the work.**

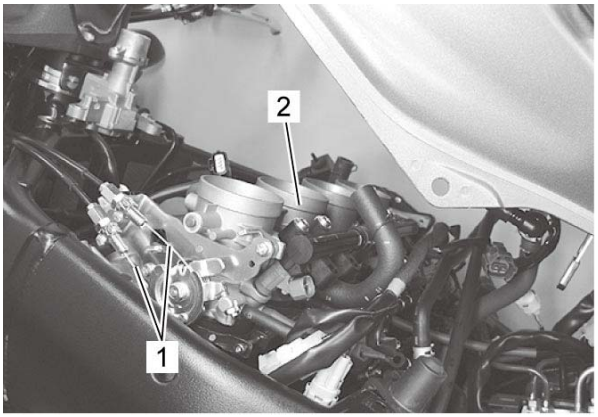

Installation

1) Connect the throttle pulling cable (1) and returning cable (2) to the throttle body.

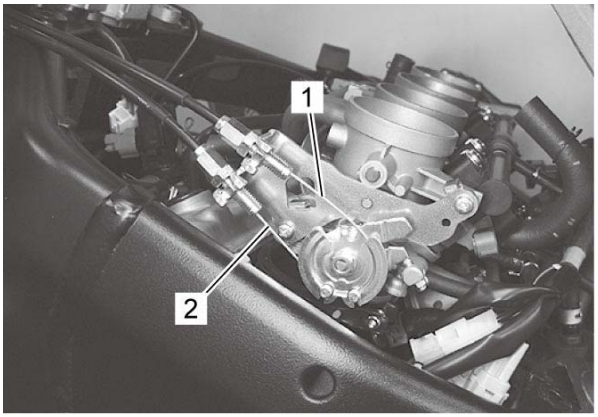

2) Loosen each throttle cable lock-nut (1).
3) Turn the each throttle cable adjuster (2) fully.
4) Tighten each lock-nut (1) to the specified torque.

Tightening torque

Throttle cable lock-nut (a): 4.5 N·m (0.46 kgf-m, 3.35 lbf-ft)

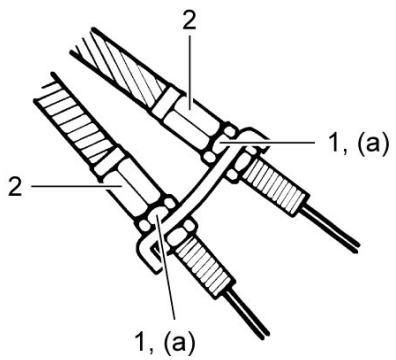

5) Install the throttle body to the intake pipes.

6) Tighten the intake pipe clamp screws (1) to the specified torque.

Tightening torque

Intake pipe clamp screw (a): 1.5 N·m (0.15 kgf-m, 1.10 lbf-ft)

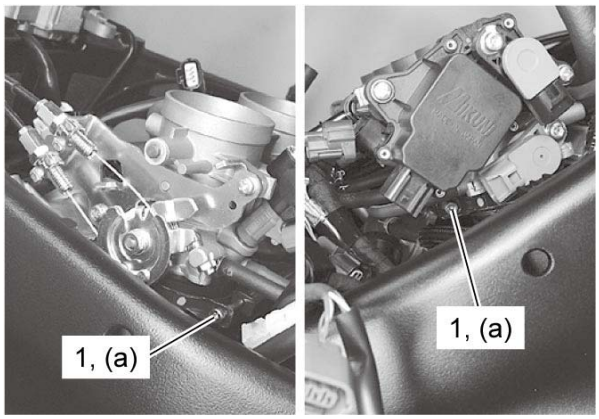

7) Connect the ISC valve coupler (1).

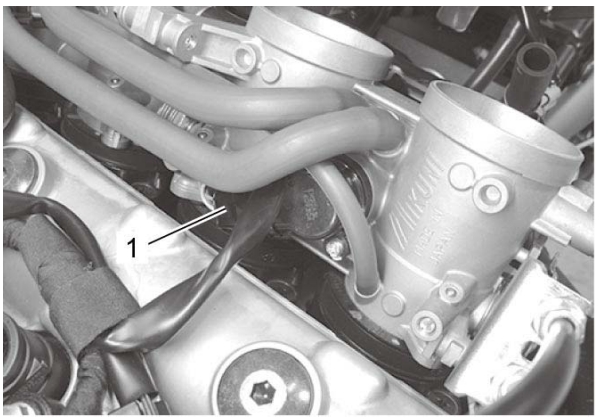

8) Connect the STP sensor coupler (1), TP sensor coupler (2) and STVA coupler (3) and install the fasteners (4).

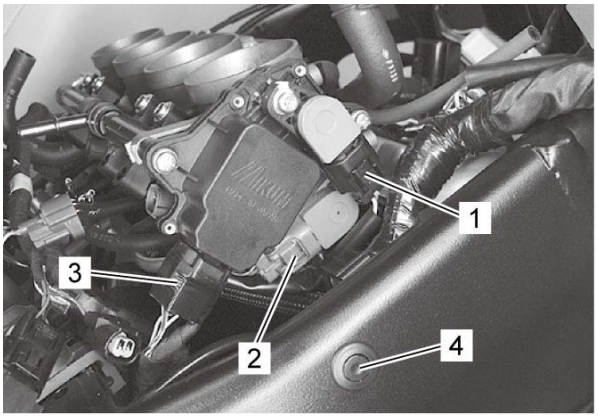

9) Connect the purge hose No. 2 (1) (If equipped).

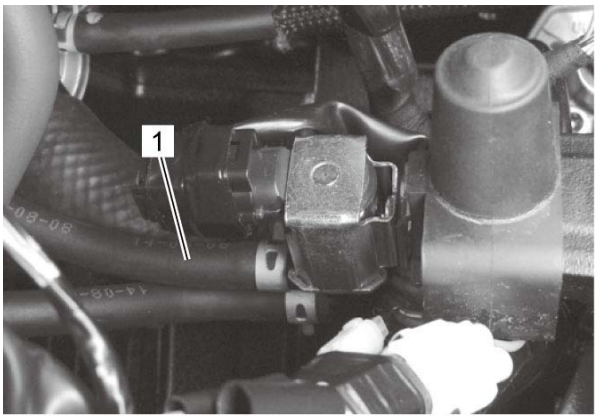

10) Connect the fuel injector couplers (1) and install the clamps (2).

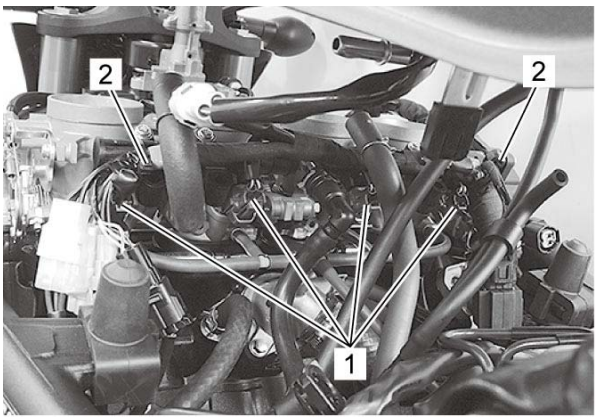

11) Connect the vacuum hoses (1).

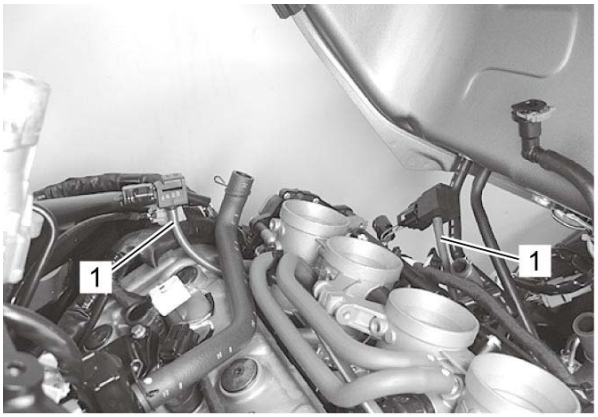

12) Connect the fuel feed hose. ☞

13) Install the air cleaner box. ☞

14) Adjust the throttle cable play. ☞

15) Reset the ISC aperture learned value. ☞

Throttle Cable Play On-vehicle Inspection and Adjustment

Inspection

Turn the throttle grip slowly and inspect the throttle cable play “a” at the periphery of the grip.

Throttle cable play

[Standard]: 2.0 – 4.0 mm (0.079 – 0.157 in)



Adjustment

1) Remove the rubber boot (1).

2) Loosen the lock-nut (2) of the throttle pulling cable.

3) Turn the adjuster (3) in or out until the throttle cable play (at the throttle grip) is within the specification.

Throttle cable play

[Standard]: 2.0 – 4.0 mm (0.079 – 0.157 in)

4) Tighten the lock-nut (2) while holding the adjuster (3).

WARNING:
After the adjustment is completed, check that handlebar movement does not raise the engine idle speed and that the throttle grip returns smoothly and automatically.

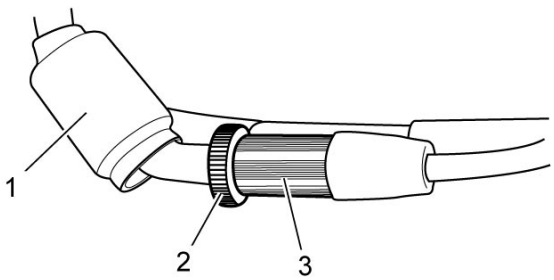

5) Reinstall the rubber boot.

Throttle Cable Removal and Installation

Removal

1) Lift and support the fuel tank. ☞
2) Remove the right handle switch. Refer to ***Handlebar Removal and Installation***.
3) Remove the throttle cables as shown in the cable routing diagram. Refer to ***Throttle Cable Routing Diagram***.

Installation

Install the throttle cables in the reverse order of removal. Pay attention to the following points:

- Install the throttle cables as shown in the cable routing diagram. Refer to ***Throttle Cable Routing Diagram***.
- Check the throttle cable play and proper operation. ☞

Throttle Cable Routing Diagram

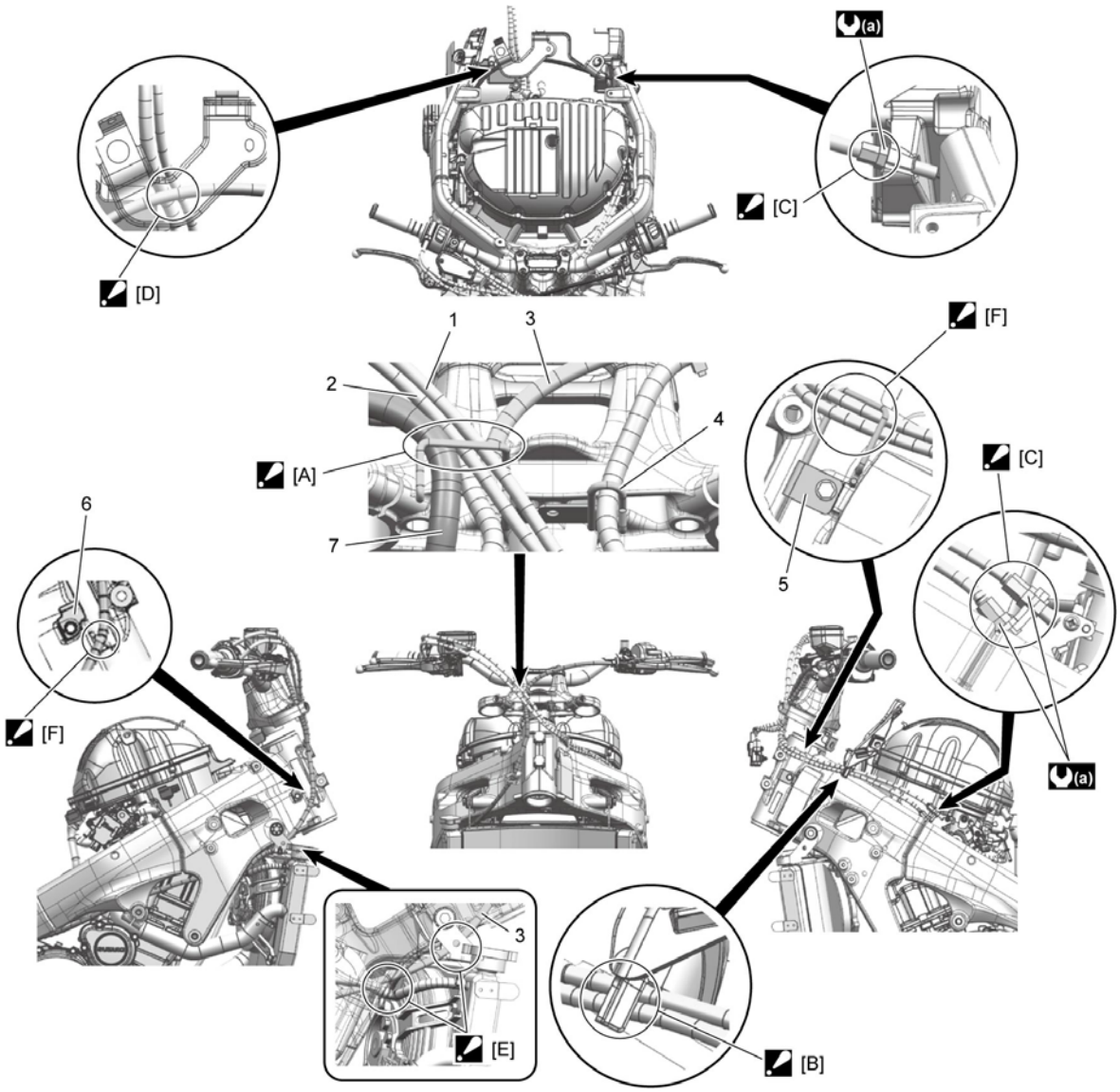

[A]:	Pass the clutch cable and throttle cables into the guide. Pass the throttle cables in front of the clutch cable. Pass the clutch cable inside of the front brake hose.	2.	Throttle cable No. 2
[B]:	Pass the throttle cables inside of the tank bracket.	3.	Clutch cable
[C]:	Turn the cable adjuster fully and tighten the lock-nut to the specified torque.	4.	Cable guide No. 1
[D]:	Pass the clutch cable over the battery lead wire and starter motor lead wire.	5.	Cable guide No. 2
[E]:	Pass the clutch cable between the bracket of radiator and frame. Pass the clutch cable inside of the air bleed hose.	6.	Clutch cable guide

[F]:	Pass the cables into the guide.	7.	Front brake hose
1.	Throttle cable No. 1	(a):	4.5 N·m (0.46 kgf-m, 3.35 lbf-ft)

Throttle Valve Synchronization

Check and adjust the throttle valve synchronization among four cylinders.

1) Start the engine and run it in idling condition for warming up.

2) Stop the warmed-up engine.

3) Remove the air cleaner box. ☞

4) Disconnect the respective vacuum hoses (1) from vacuum nipples on the throttle body.

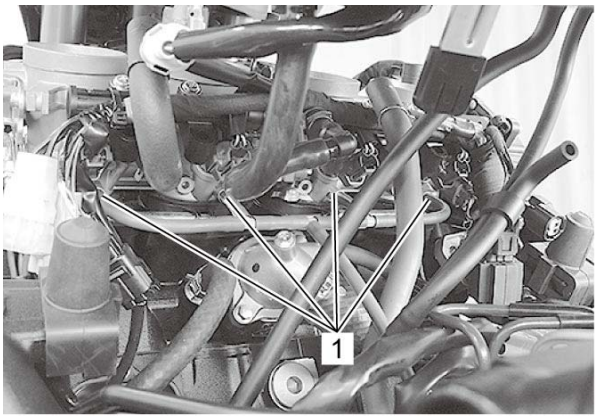

5) Disconnect the IAP sensor coupler (1).

6) Connect the respective vacuum tester hoses (2) to the vacuum nipples.

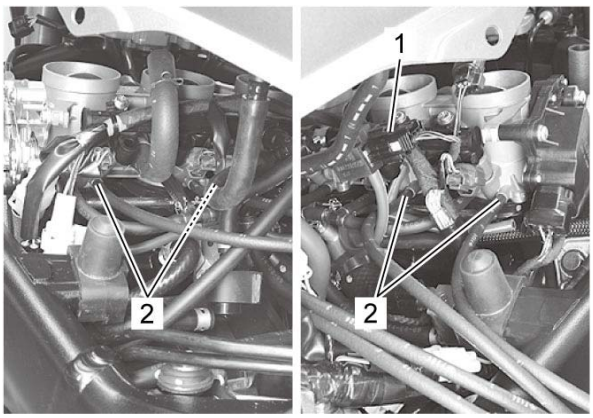

7) Set up the SDS tool referring to the SDS operation manual for further details.

8) Start the engine.

9) Click “Data monitor”.

10) Warm up the engine (Engine coolant temp. more than 80 °C (176 °F)).

11) Click “Active control”.

12) Click “ISC air volume control”.

13) Click “ON” to fix the ISC air volume of four cylinders.

NOTE:
When making this synchronization, be sure that the engine coolant temperature is

within 80 – 100 °C (176 – 212 °F).

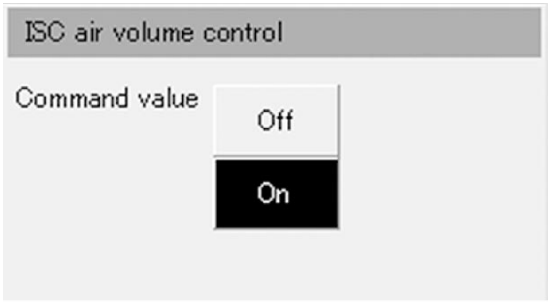

14) Check for the synchronization of vacuum from #1 to #4 cylinders.



15) Equalize the vacuum of the cylinders by turning each synchronizing screws (1) and keep it running at idling speed.

NOTE:
Always set the engine rpm at idle rpm.

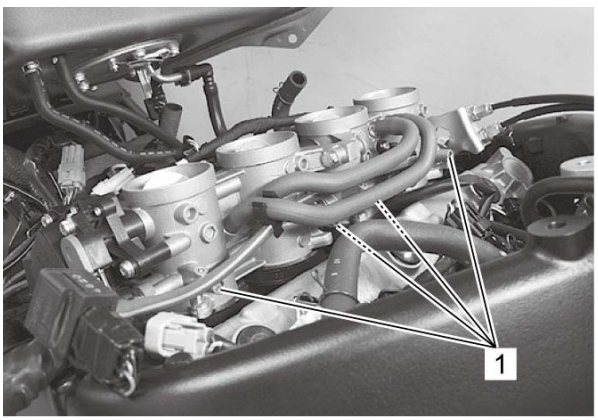

16) If the adjustment is not yet correct, remove each synchronizing screw and clean them using a swab moistened with a carburetor cleaner (petroleum solvent) and blow dry with a compressed air. Also, clean the synchronizing screw passageways.

NOTE:
- **Slowly turn the air screw clockwise and count the number of turns until the screw is lightly seated.**
- **Make a note of how many turns were made so the screw can be reset correctly after cleaning.**

17) Repeat the procedures from 7) to 15).

18) Close the SDS tool and turn the ignition switch OFF.

19) Disconnect the vacuum tester and install the removed parts.

20) After completing the throttle valve synchronization, clear the DTC and reset the ISC aperture learned value. ☞

Valve / Valve Spring Removal and Installation

Refer to ***Cylinder Head Removal*** and ***Cylinder Head Installation***.

Removal

1) Remove the tappet (1) and shim (2) by fingers or magnetic hand.

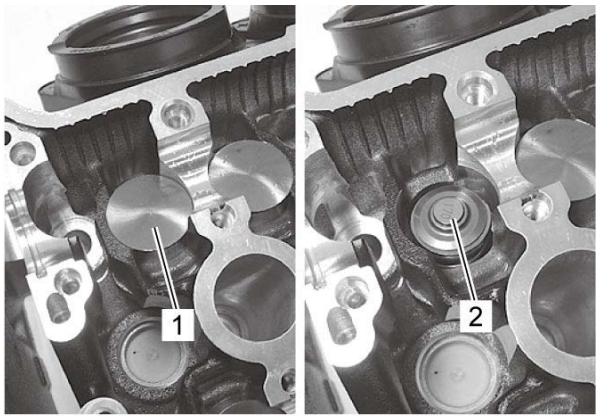

2) Insert the special tool between the valve springs and cylinder head.

3) Using the special tools, compress the valve springs and remove the two cotter halves (1) from the valve stem.

NOTICE:
Be careful not to damage the tappet sliding surface with the special tool.

Special Tool

(A): 09919-28620
(B): 09916-14522
(C): 09916-14510
09916-84511

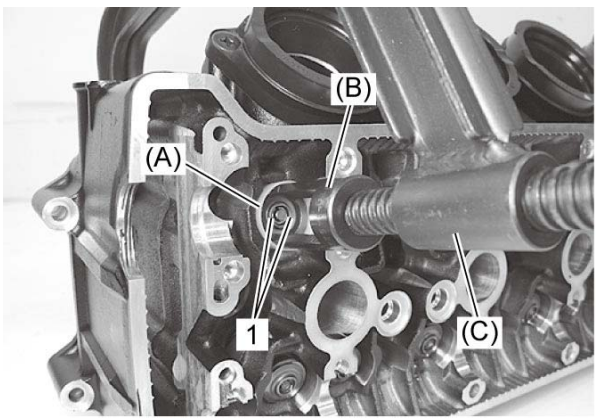

4) Remove the valve spring retainer (1) and valve spring (2).

5) Pull out the valve (3) from the combustion chamber side.

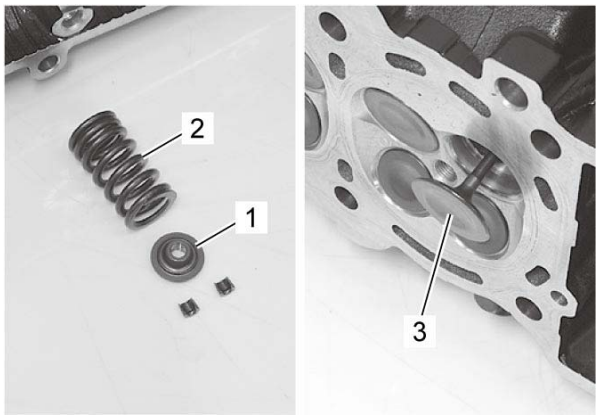

6) Remove the oil seal (1) and spring seat (2).

7) Remove the other valves in the same manner as described previously.

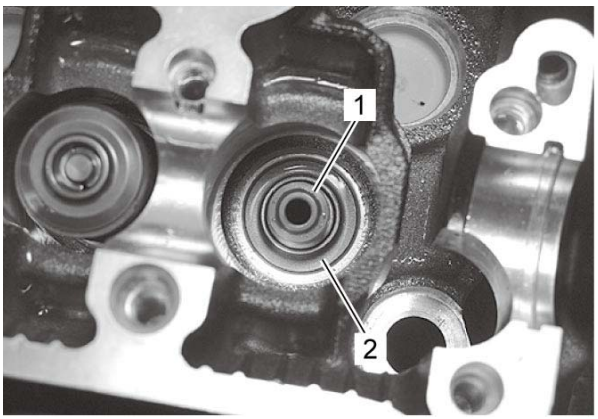

Installation

Reference: Valve Inspection

1) Install the valve spring seat (1).

2) Apply engine oil to the new oil seal (2), and press-fit it into the position.

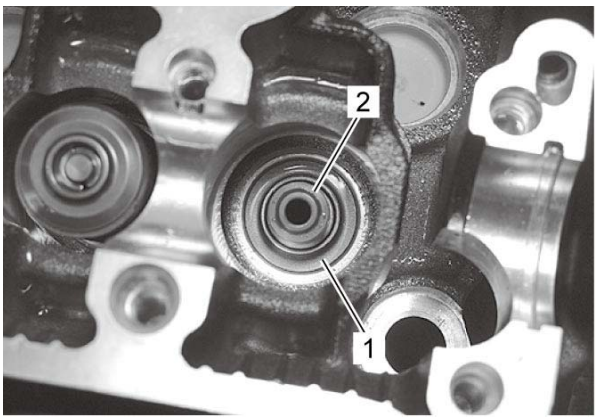

3) Insert the valve, with its stem coated with molybdenum oil solution all around and along the full stem length without any break.

NOTICE:
When inserting the valve, take care not to damage the lip of the oil seal.

"A": Assembly lubrication (Molybdenum oil solution)

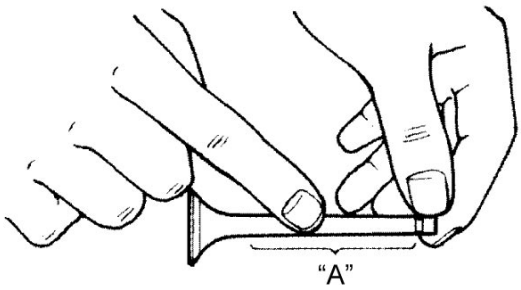

4) Install each valve spring with the small-pitch portion (1) facing cylinder head.

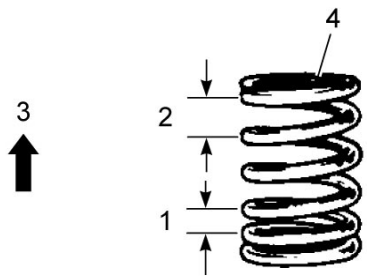

2.	Large-pitch portion	4.	Paint
3.	Upward		

5) Put on the valve spring retainer (1), and using the special tools, press down the springs, fit the cotter halves to the stem end, and release the lifter to allow the cotter halves to wedge in between retainer and stem.

NOTICE:
- **Be sure to restore each spring and valve to their original positions.**
- **Be careful not to damage the valve and valve stem when handling it.**
- **Compressing of the valve spring must be limited to the extent only necessary to prevent the spring from fatigue.**

Special Tool

(A): 09916–14510
(B): 09916–14522
(C): 09919–28620
09916–84511

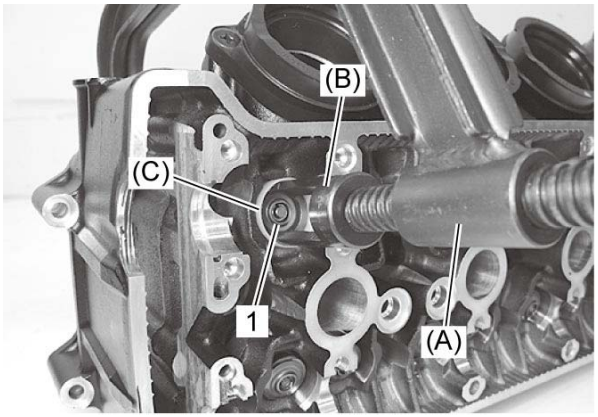

6) Be sure that the rounded lip (1) of the cotter fits snugly into the groove (2) in the stem end.

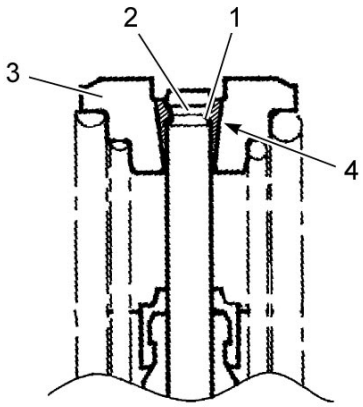

3.	Valve spring retainer	4.	Cotter

7) Apply engine oil to the stem ends and tappet shims (1).
8) Apply engine oil to the tappets (2).
9) Install the tappet shims (1) and the tappets (2) to their original positions.

NOTE:
When seating the tappet shim, be sure the figure printed surface faces the tappet.

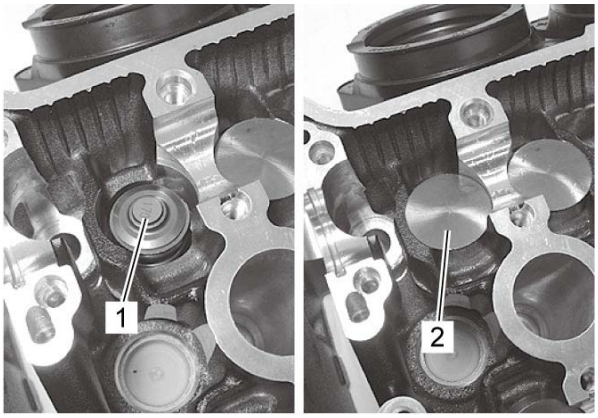
1
2

Valve Clearance Inspection and Adjustment

Refer to ***Cylinder Head Cover Removal and Installation*** and ***Spark Plug Removal and Installation***.

Inspection

Valve clearance adjustment must be checked and adjusted, a) at the time of periodic inspection, b) when the valve mechanism is serviced, and c) when the camshafts are removed for servicing.

NOTE:

- **The cam must be at positions, (1) or (2), when checking or adjusting the valve clearance. Clearance readings should not be taken with the cam in any other position than these two positions.**
- **The valve clearance should be taken when each cylinder is at Top Dead Center (TDC) of compression stroke.**
- **The clearance specification is for COLD state.**
- **To turn the crankshaft for valve clearance checking, be sure to use a wrench, and rotate in the normal running direction.**

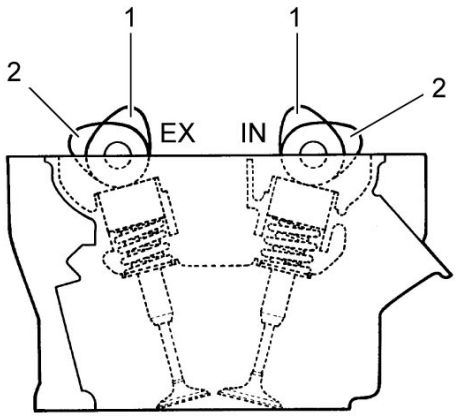

1) Remove the crankshaft hole plug (1).

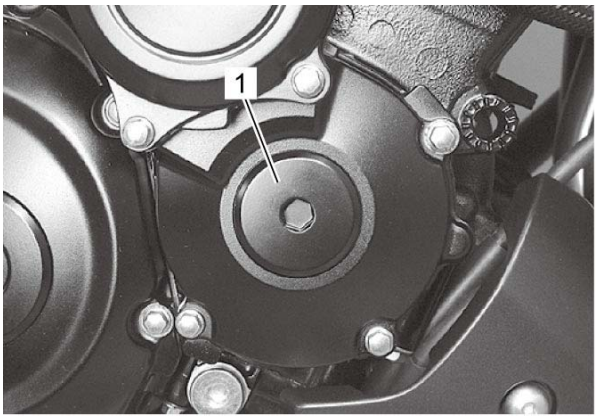

2) Turn the crankshaft to bring the line (1) on the starter clutch to the slit (2) of cap hole thread and also to bring the notches (3) on the left ends of both camshafts (EX and IN) to the positions as shown.

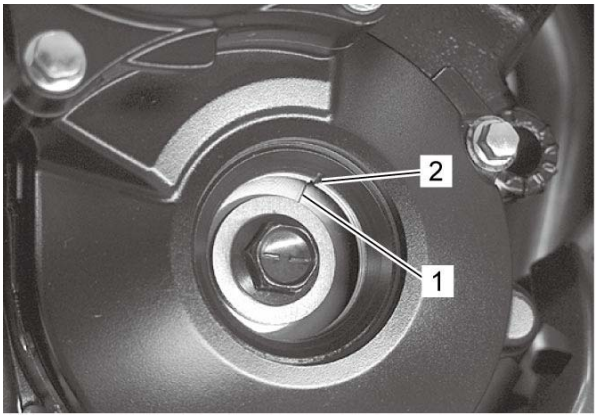

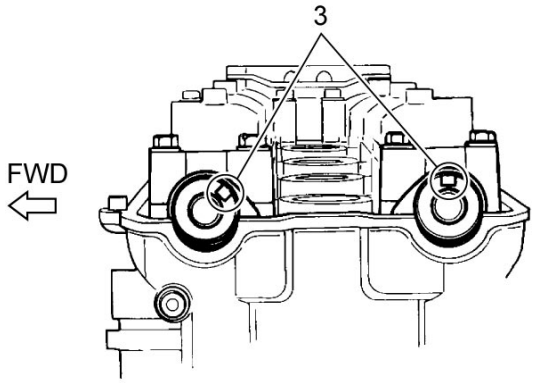

3) In this condition, read the valve clearance at the valves (1) (IN and EX of #4 cylinder, EX of #3 and IN of #2). If the clearance is out of specification, adjust the clearance.

Special Tool

09900–20803

Valve clearance

When engine cold
Intake [Standard]: 0.10 – 0.20 mm (0.0040 – 0.0078 in)
Exhaust [Standard]: 0.20 – 0.30 mm (0.0079 – 0.0118 in)

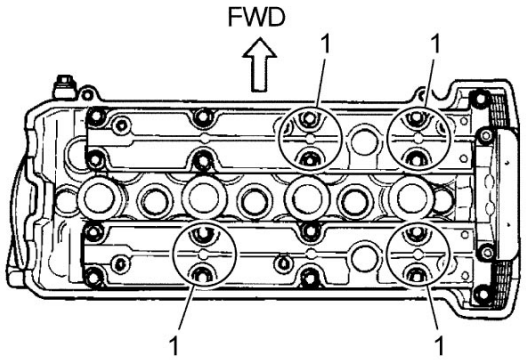

Cam position	Notch position	
	Exhaust camshaft	Intake camshaft
(1)	← FWD	← FWD

4) Turn the crankshaft 360° degrees (one rotation) to bring the line on the starter clutch to the slit of cap hole thread and also to bring the notches (1) to the position as shown.

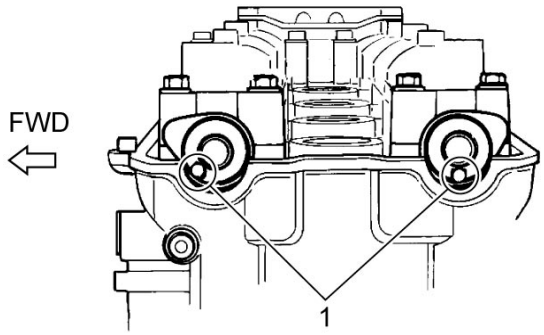

5) Read the clearance at the rest of the valves (1) and adjust the clearance if necessary.

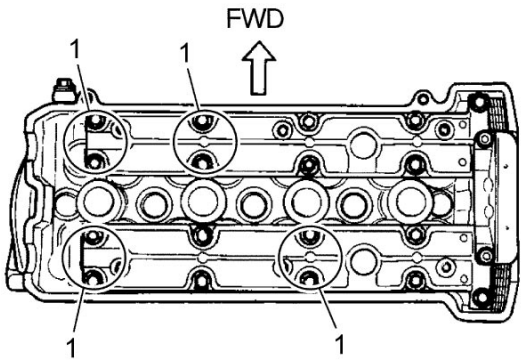

Cam position	Notch position	
	Exhaust camshaft	Intake camshaft
(1)	← FWD	← FWD

Adjustment

The clearance is adjusted by replacing the existing tappet shim with a thicker or thinner shim.

1) Remove the intake or exhaust camshaft. ☞

2) Remove the tappet (1) and shim (2) by fingers or magnetic hand.

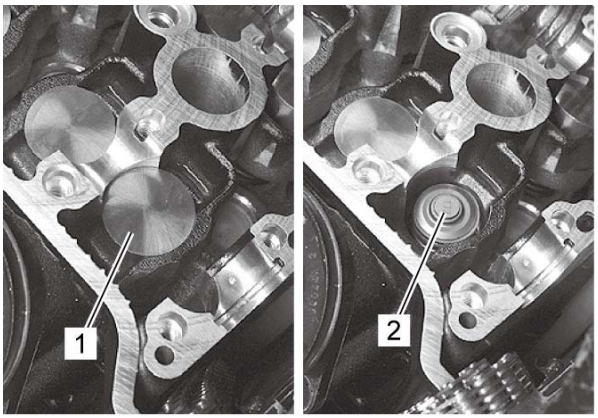

3) Check the figures printed on the shim. These figures indicate the thickness of the shim, as illustrated.

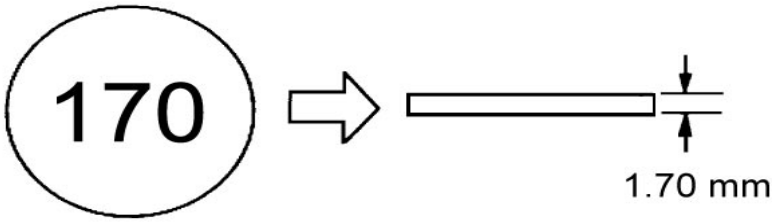

4) Select a replacement shim that will provide a clearance within the specified range. For the purpose of this adjustment, a total of 21 sizes of tappet shim are available ranging from 1.20 to 2.20 mm in steps of 0.05 mm.

5) Fit the selected shim (1) to the valve stem end, with numbers toward tappet. Be sure to check shim size with micrometer to ensure its size.

NOTE:
- **Be sure to apply engine oil to tappet shim top and bottom faces.**
- **When seating the tappet shim, be sure the figure printed surface faces the tappet.**

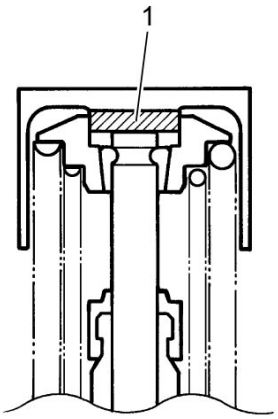

(INTAKE SIDE)

TAPPET SHIM SELECTION TABLE [INTAKE]
TAPPET SHIM NO. (12892-05C00-XXX)

TAPPET SHIM SET (12800-05830)

MEASURED VALVE CLEARANCE (mm) / SUFFIX NO.	120	125	130	135	140	145	150	155	160	165	170	175	180	185	190	195	200	205	210	215	220
PRESENT SHIM SIZE (mm)	1.20	1.25	1.30	1.35	1.40	1.45	1.50	1.55	1.60	1.65	1.70	1.75	1.80	1.85	1.90	1.95	2.00	2.05	2.10	2.15	2.20
0.00-0.04			1.20	1.25	1.30	1.35	1.40	1.45	1.50	1.55	1.60	1.65	1.70	1.75	1.80	1.85	1.90	1.95	2.00	2.05	2.10
0.05-0.09		1.20	1.25	1.30	1.35	1.40	1.45	1.50	1.55	1.60	1.65	1.70	1.75	1.80	1.85	1.90	1.95	2.00	2.05	2.10	2.15
0.10-0.20	SPECIFIED CLEARANCE/NO ADJUSTMENT REQUIRED																				
0.21-0.25	1.30	1.35	1.40	1.45	1.50	1.55	1.60	1.65	1.70	1.75	1.80	1.85	1.90	1.95	2.00	2.05	2.10	2.15	2.20	2.20	
0.26-0.30	1.35	1.40	1.45	1.50	1.55	1.60	1.65	1.70	1.75	1.80	1.85	1.90	1.95	2.00	2.05	2.10	2.15	2.20			
0.31-0.35	1.40	1.45	1.50	1.55	1.60	1.65	1.70	1.75	1.80	1.85	1.90	1.95	2.00	2.05	2.10	2.15	2.20				
0.36-0.40	1.45	1.50	1.55	1.60	1.65	1.70	1.75	1.80	1.85	1.90	1.95	2.00	2.05	2.10	2.15	2.20					
0.41-0.45	1.50	1.55	1.60	1.65	1.70	1.75	1.80	1.85	1.90	1.95	2.00	2.05	2.10	2.15	2.20						
0.46-0.50	1.55	1.60	1.65	1.70	1.75	1.80	1.85	1.90	1.95	2.00	2.05	2.10	2.15	2.20							
0.51-0.55	1.60	1.65	1.70	1.75	1.80	1.85	1.90	1.95	2.00	2.05	2.10	2.15	2.20								
0.56-0.60	1.65	1.70	1.75	1.80	1.85	1.90	1.95	2.00	2.05	2.10	2.15	2.20									
0.61-0.65	1.70	1.75	1.80	1.85	1.90	1.95	2.00	2.05	2.10	2.15	2.20										
0.66-0.70	1.75	1.80	1.85	1.90	1.95	2.00	2.05	2.10	2.15	2.20											
0.71-0.75	1.80	1.85	1.90	1.95	2.00	2.05	2.10	2.15	2.20												
0.76-0.80	1.85	1.90	1.95	2.00	2.05	2.10	2.15	2.20													
0.81-0.85	1.90	1.95	2.00	2.05	2.10	2.15	2.20														
0.86-0.90	1.95	2.00	2.05	2.10	2.15	2.20															
0.91-0.95	2.00	2.05	2.10	2.15	2.20																
0.96-1.00	2.05	2.10	2.15	2.20																	
1.01-1.05	2.10	2.15	2.20																		
1.06-1.10	2.15	2.20																			
1.11-1.15	2.20																				

HOW TO USE THIS CHART:

I. Measure valve clearance. "ENGINE IS COLD"
II. Measure present shim size.
III. Match clearance in vertical column with present shim size in horizontal column.

EXAMPLE

Valve clearance is	0.23 mm
Present shim size	1.70 mm
Shim size to be used	1.80 mm

(EXHAUST SIDE)

TAPPET SHIM SELECTION TABLE [EXHAUST]
TAPPET SHIM NO. (12892-05C00-XXX)

TAPPET SHIM SET (12800-05830)

MEASURED VALVE CLEARANCE (mm) \ SUFFIX NO.	120	125	130	135	140	145	150	155	160	165	170	175	180	185	190	195	200	205	210	215	220
PRESENT SHIM SIZE (mm)	1.20	1.25	1.30	1.35	1.40	1.45	1.50	1.55	1.60	1.65	1.70	1.75	1.80	1.85	1.90	1.95	2.00	2.05	2.10	2.15	2.20
0.05-0.09				1.20	1.25	1.30	1.35	1.40	1.45	1.50	1.55	1.60	1.65	1.70	1.75	1.80	1.85	1.90	1.95	2.00	2.05
0.10-0.14			1.20	1.25	1.30	1.35	1.40	1.45	1.50	1.55	1.60	1.65	1.70	1.75	1.80	1.85	1.90	1.95	2.00	2.05	2.10
0.15-0.19		1.20	1.25	1.30	1.35	1.40	1.45	1.50	1.55	1.60	1.65	1.70	1.75	1.80	1.85	1.90	1.95	2.00	2.05	2.10	2.15
0.20-0.30	SPECIFIED CLEARANCE/NO ADJUSTMENT REQUIRED																				
0.31-0.35	1.30	1.35	1.40	1.45	1.50	1.55	1.60	1.65	1.70	1.75	1.80	1.85	1.90	1.95	2.00	2.05	2.10	2.15	2.20	2.20	
0.36-0.40	1.35	1.40	1.45	1.50	1.55	1.60	1.65	1.70	1.75	1.80	1.85	1.90	1.95	2.00	2.05	2.10	2.15	2.20			
0.41-0.45	1.40	1.45	1.50	1.55	1.60	1.65	1.70	1.75	1.80	1.85	1.90	1.95	2.00	2.05	2.10	2.15	2.20				
0.46-0.50	1.45	1.50	1.55	1.60	1.65	1.70	1.75	1.80	1.85	1.90	1.95	2.00	2.05	2.10	2.15	2.20					
0.51-0.55	1.50	1.55	1.60	1.65	1.70	1.75	1.80	1.85	1.90	1.95	2.00	2.05	2.10	2.15	2.20						
0.56-0.60	1.55	1.60	1.65	1.70	1.75	1.80	1.85	1.90	1.95	2.00	2.05	2.10	2.15	2.20							
0.61-0.65	1.60	1.65	1.70	1.75	1.80	1.85	1.90	1.95	2.00	2.05	2.10	2.15	2.20								
0.66-0.70	1.65	1.70	1.75	1.80	1.85	1.90	1.95	2.00	2.05	2.10	2.15	2.20									
0.71-0.75	1.70	1.75	1.80	1.85	1.90	1.95	2.00	2.05	2.10	2.15	2.20										
0.76-0.80	1.75	1.80	1.85	1.90	1.95	2.00	2.05	2.10	2.15	2.20											
0.81-0.85	1.80	1.85	1.90	1.95	2.00	2.05	2.10	2.15	2.20												
0.86-0.90	1.85	1.90	1.95	2.00	2.05	2.10	2.15	2.20													
0.91-0.95	1.90	1.95	2.00	2.05	2.10	2.15	2.20														
0.96-1.00	1.95	2.00	2.05	2.10	2.15	2.20															
1.01-1.05	2.00	2.05	2.10	2.15	2.20																
1.06-1.10	2.05	2.10	2.15	2.20																	
1.11-1.15	2.10	2.15	2.20																		
1.16-1.20	2.15	2.20																			
1.21-1.25	2.20																				

HOW TO USE THIS CHART:

I. Measure valve clearance. "ENGINE IS COLD"
II. Measure present shim size.
III. Match clearance in vertical column with present shim size in horizontal column.

EXAMPLE

Valve clearance is	0.33 mm
Present shim size	1.70 mm
Shim size to be used	1.80 mm



6) Install the camshafts and cam chain tension adjuster. ☞

7) Rotate the engine so that the tappet is depressed fully. This will squeeze out oil trapped between the shim and the tappet that could cause an incorrect measurement, then check the clearance again to confirm that it is within the specified range.

8) After finishing the tappet clearance adjustment, check the engine for smooth starting and free from any abnormal noise.

Valve Guide Replacement

Refer to ***Valve / Valve Spring Removal and Installation***.

1) Using the valve guide remover, drive the valve guide out toward the intake or exhaust camshaft side.

Special Tool

(A): 09916–43211

NOTE:
- **Discard the removed valve guide sub-assemblies.**
- **Only oversized valve guides are available as replacement parts. (Part No. 11115-29G70)**

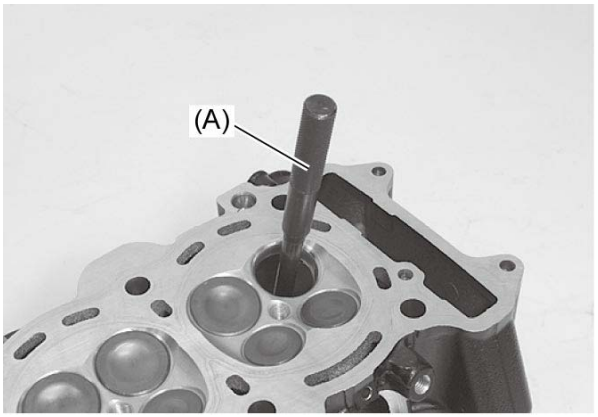

2) Refinish the valve guide holes in the cylinder head using the reamer and handle.

3) Remove the special tools by turning clockwise and raising them at the same time.

NOTICE:
Never turn the special tools counterclockwise, as this will dull the blades.

Special Tool

(A): 09916–33320
(B): 09916–34542

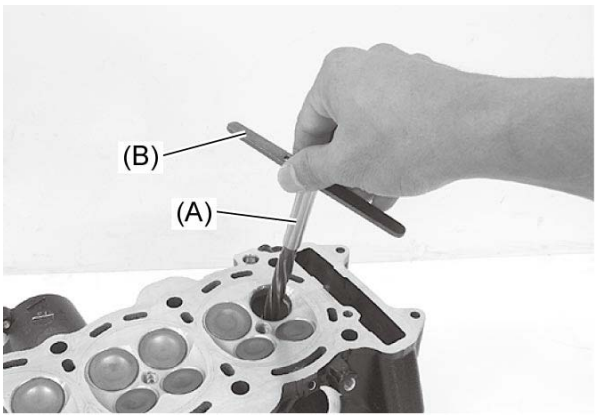

4) Cool down the new valve guides in a freezer for about one hour and heat the cylinder head to 100 – 150 °C (212 – 302 °F) with a hot plate.

NOTICE:
Do not use a burner to heat the valve guide hole to prevent cylinder head distortion.

5) Apply engine oil to each valve guide and valve guide hole.

NOTICE:
Failure to oil the valve guide hole before driving the new guide into place may result in a damaged guide or head.

6) Drive the guide into the guide hole using the valve guide installer.

NOTE:
Install the valve guide until the attachment contacts the cylinder head.

Special Tool

(A): 09916–43211
(B): 09916–53380

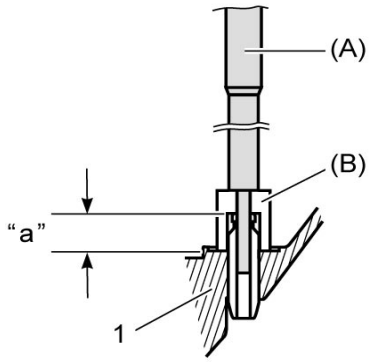

1.	Cylinder head	"a":	13.7 – 13.9 mm (0.54 – 0.55 in) [IN and EX]

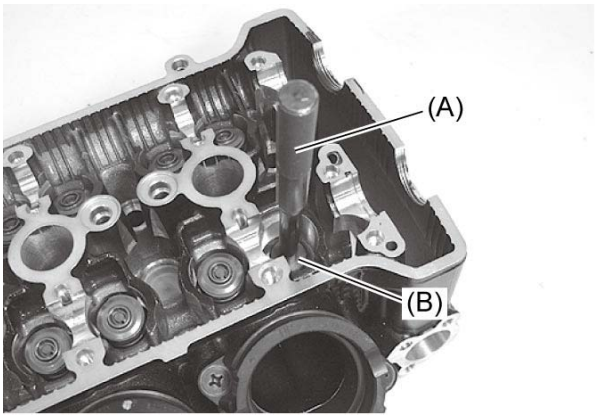

7) After installing the valve guides, refinish their guiding bores using the reamer. Be sure to clean and oil the guides after reaming.

NOTE:
- **Be sure to cool down the cylinder head to ambient air temperature.**
- **Insert the reamer from the combustion chamber and always turn the reamer handle clockwise.**

Special Tool

(A): 09916–33210
(B): 09916–34542

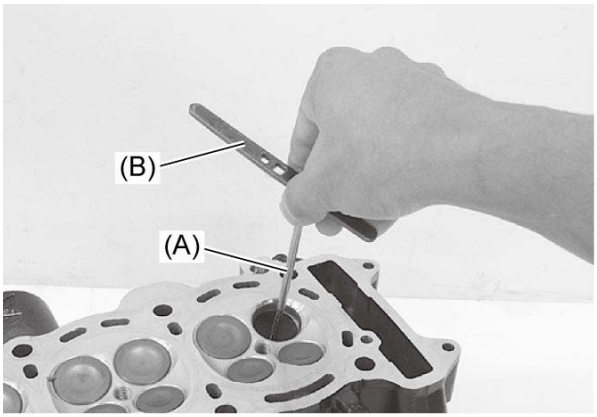

Valve Inspection

Refer to ***Valve / Valve Spring Removal and Installation***.

Valve Stem Runout

Support the valve using V-blocks, as shown in the figure, and check its runout using the dial gauge. If the runout exceeds the service limit, replace the valve.

Special Tool

(A): 09900–20607
(B): 09900–20701
(C): 09900–21304

Valve stem runout

Intake & Exhaust [Limit]: 0.05 mm (0.0019 in)

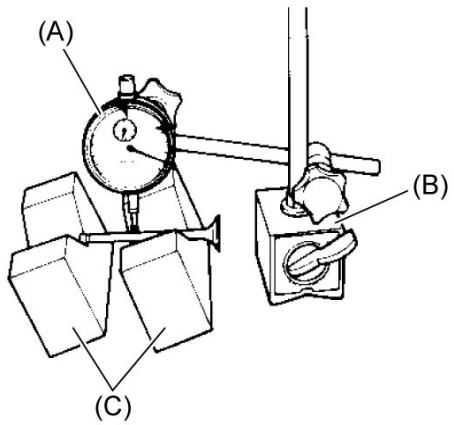

Valve Head Radial Runout

Place the dial gauge at a right angle to the valve head face and measure the valve head radial runout. If it measures more than the service limit, replace the valve.

Special Tool

(A): 09900–20607
(B): 09900–20701
(C): 09900–21304

Valve head radial runout

Intake & Exhaust [Limit]: 0.03 mm (0.0011 in)

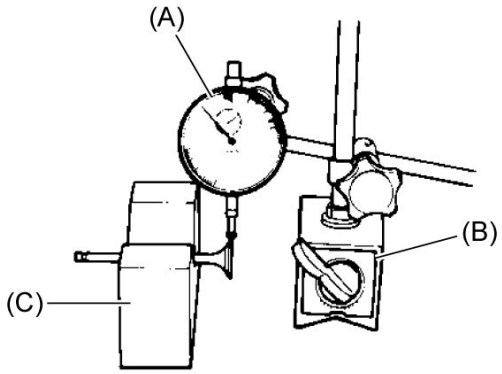

Valve Face Wear

Visually inspect each valve face for wear. Replace any valve with an abnormally worn face. The thickness of the valve face decreases as the face wears. Measure the valve head “a”. If it is out of specification replace the valve with a new one.

Special Tool

09900–20102

Valve head thickness

Intake [Limit]: 0.5 mm (0.019 in)
Exhaust [Limit]: 0.5 mm (0.019 in)

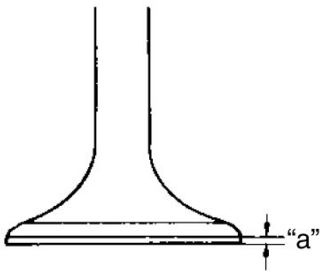

Valve Stem Wear

Measure the valve stem O.D. using the micrometer. If it is out of specification, replace the valve with a new one. If the valve stem O.D. is within specification but the valve stem deflection is not, replace the valve guide. After replacing the valve or valve guide, recheck the deflection.

Special Tool

(A): 09912–66310

Valve stem O.D.

Intake [Standard]: 4.475 – 4.490 mm (0.1762 – 0.1767 in)
Exhaust [Standard]: 4.455 – 4.470 mm (0.1754 – 0.1759 in)

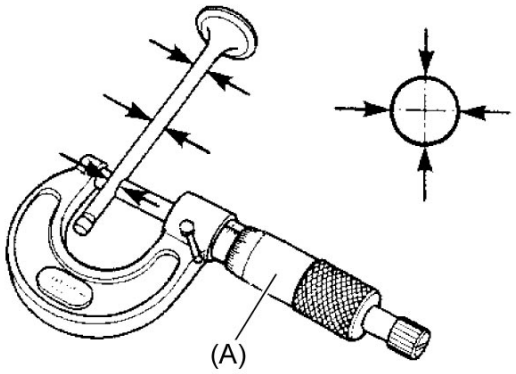

Valve Seat Width

1) Visually check for valve seat width on each valve face. If the valve face has worn abnormally, replace the valve.

2) Coat the valve seat with a red lead (Prussian Blue) and set the valve in place.

3) Rotate the valve with light pressure.

Special Tool

(A): 09916–10911

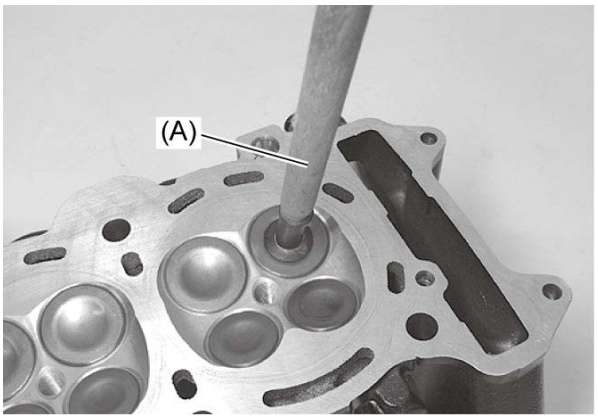

4) Check that the transferred red lead (blue) on the valve face is uniform all around and in center of the valve face.
If the seat width “a” measured exceeds the standard value, or seat width is not uniform reface the seat using the seat cutter. ☞

Valve seat width

Intake [Standard]: 0.9 – 1.1 mm (0.036 – 0.043 in)
Exhaust [Standard]: 0.9 – 1.1 mm (0.036 – 0.043 in)

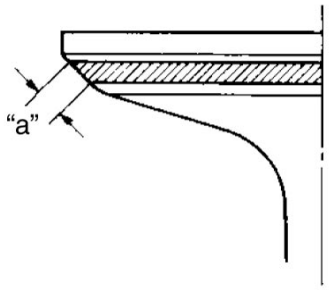

Valve Seat Sealing Condition

1) Clean and assemble the cylinder head and valve components.

2) Fill the intake and exhaust ports with gasoline to check for leaks. If any leaks occur, inspect the valve seat and face for burrs or other things that could prevent the valve from sealing. ☞

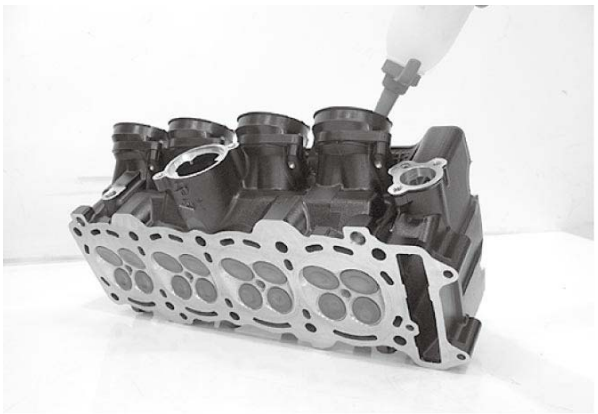

Valve Seat Repair

The valve seats (1) for both the intake and exhaust valves are machined to three different angles. The seat contact surface is cut at 45°.

NOTICE:

- **The valve seat contact area must be inspected after each cut.**
- **Do not use lapping compound after the final cut is made. The finished valve seat should have a velvety smooth finish but not a highly polished or shiny finish. This will provide a soft surface for the final seating of the valve which will occur during the first few seconds of engine operation.**

NOTE:

After servicing the valve seats, be sure to check the valve clearance after the cylinder head has been reinstalled. ☞

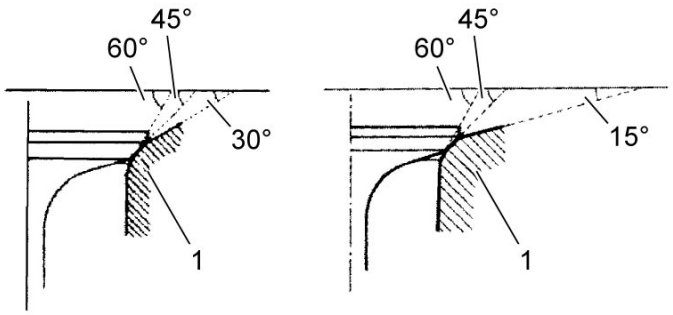

[A]:	Intake valve	[B]:	Exhaust valve

	Intake	Exhaust
Seat angle	30°/45°/60°	15°/45°/60°
Seat width	0.9 – 1.1 mm (0.036 – 0.043 in)	←
Valve diameter	30 mm (1.2 in)	24 mm (0.94 in)
Valve guide I.D.	4.500 – 4.512 mm (0.1772 – 0.1776 in)	←

Valve Spring Inspection

Refer to ***Valve / Valve Spring Removal and Installation***.
The force of the coil spring keeps the valve seat tight. Weakened spring results in reduced engine power output and often accounts for the chattering noise coming from the valve mechanism.
Check the valve springs for proper strength by measuring its free length and also by the force required to compress it. If the spring length is less than the service limit or if the force required to compress the spring does not fall within the range specified, replace spring as a set.

Special Tool

(A): 09900–20102

Valve spring free length

Intake [Limit]: 37.3 mm (1.47 in)
Exhaust [Limit]: 37.3 mm (1.47 in)

Valve spring pre-load

When compressed to 33.55 mm (1.321 in)
Intake [Standard]: 141 – 163 N (14.4 – 16.6 kgf, 31.7 – 36.6 lbs)
Exhaust [Standard]: 141 – 163 N (14.4 – 16.6 kgf, 31.7 – 36.6 lbs)

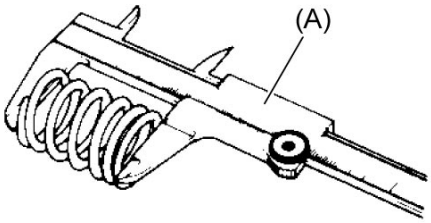

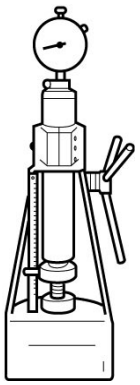

Tightening Torque Specifications

Fastening part	Tightening torque			Note
	N·m	kgf-m	lbf-ft	
Air cleaner outlet tube clamp screw	1.5	0.15	1.10	☞
Air cleaner bolt	5.5	0.56	4.05	☞
Throttle cable lock-nut	4.5	0.46	3.35	☞
Intake pipe clamp screw	1.5	0.15	1.10	☞
Intake pipe screw	8.5	0.87	6.30	☞
Cylinder head cover bolt	14	1.4	10.5	☞
Camshaft journal holder bolt	10	1.0	7.5	☞ ☞ ☞
Cam chain tension adjuster bolt	10	1.0	7.5	☞
Cam chain tension adjuster plug	23	2.3	17.0	☞
Crankshaft hole plug	11	1.1	8.5	☞
Engine mounting thrust adjuster	23	2.3	17.0	☞
Engine mounting thrust adjuster lock-nut	45	4.6	33.5	☞
Cylinder head bolt (L105)	31 N·m (3.2 kgf-m, 23.0 lbf-ft) → turn clockwise 60°			☞
Cylinder head bolt (L50)	10	1.0	7.5	☞
Cam chain tensioner bolt	23	2.3	17.0	☞
Oil gallery bolt	10	1.0	7.5	☞
Bypass hose union	12	1.2	9.0	☞
Conrod cap bolt	21 N·m (2.1 kgf-m, 15.5 lbf-ft) → turn clock wise 90°			☞ ☞
Crankcase middle bolt (M9)	18 N·m (1.8 kgf-m, 13.5 lbf-ft) → turn clock wise 50°			☞ ☞ ☞
Crankcase middle bolt (M8)	15 → 26 N·m (1.5 → 2.7 kgf-m, 11.0 → 19.5 lbf-ft)			☞ ☞
Crankcase middle bolt (M6)	11	1.1	8.5	☞ ☞
Crankcase upper bolt (M6)	11	1.1	8.5	☞ ☞
Crankcase lower bolt (M6)	11	1.1	8.5	☞
Crankcase upper bolt (M8)	15 → 26 N·m (1.5 → 2.7 kgf-m, 11.0 → 19.5 lbf-ft)			☞
Driveshaft oil seal retainer bolt	10	1.0	7.5	☞
Water inlet connector mounting bolt	10	1.0	7.5	☞
Water jacket plug	9.5	0.97	7.00	☞
Oil gallery upper plug (M10)	18	1.8	13.5	☞
Oil gallery plug (M16)	35	3.6	26.0	☞
Oil gallery lower plug (M14)	23	2.3	17.0	☞
Crankcase middle bolt (M8)	15 → 26 N·m (1.5 → 2.7 kgf-m, 11.0 → 19.5 lbf-ft)			☞

Reference:

For the tightening torques of fasteners not specified in this page, refer to:

Throttle Cable Routing Diagram

Intake System Construction

Throttle Body Components

Engine Assembly Installation

Fasteners Information

Recommended Service Material

Material	SUZUKI recommended product or Specification		Note
Assembly lubrication	Molybdenum oil solution	—	☞ ☞ ☞
Grease	SUZUKI SUPER GREASE A	P/No.: 99000–25011	☞
Sealant	SUZUKI BOND 1207B	P/No.: 99000–31140	☞ ☞ ☞ ☞
Thread lock cement	THREAD LOCK CEMENT 1322D	P/No.: 99000–32150	☞ ☞ ☞ ☞

NOTE:
Required service material(s) is also described in:
Throttle Body Components

Special Tool

09900–20102 Vernier calipers (200 mm)	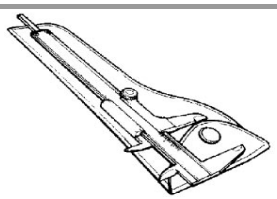	09900–20202 Micrometer (25 - 50 mm)	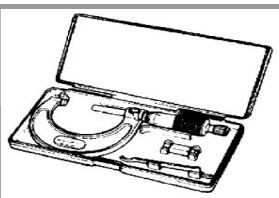
09900–20203 Micrometer (50 - 75 mm)	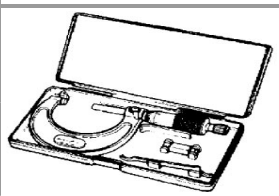	09900–20530 Cylinder gauge set	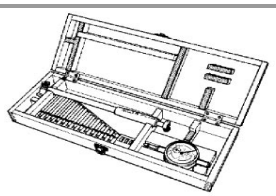
09900–20602 Dial gauge (1 x 0.001 mm)	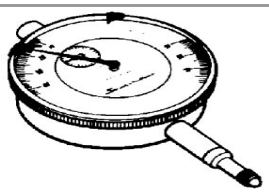	09900–20605 Dial calipers (10 - 34 mm)	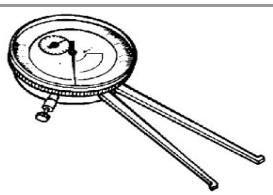
09900–20607 Dial gauge (10 x 0.01 mm)	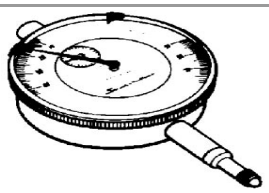	09900–20701 Dial gauge chuck	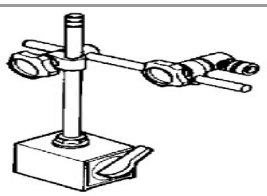
09900–20803 Thickness gauge	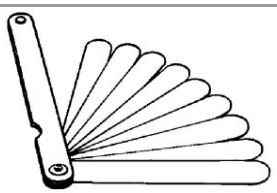	09900–21304 V blocks	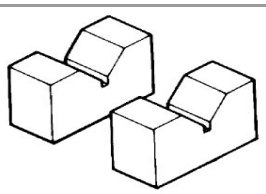
09900–22301 Plastigage (0.025 - 0.076 mm)	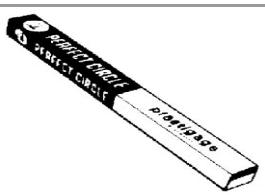	09900–22302 Plastigage (0.051 - 0.152 mm)	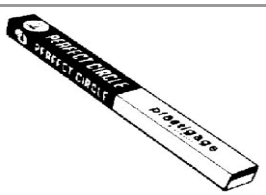

☞ ☞ ☞ ☞ ☞		☞	
09900–22401 Small bore gauge (10 - 18 mm) ☞ ☞	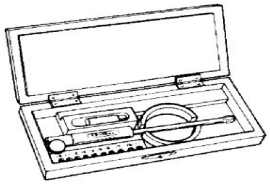	09900–22403 Small bore gauge (18 - 35 mm) ☞	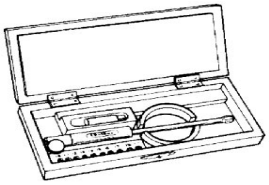
09912–66310 Micrometer (0 - 25 mm) ☞ ☞ ☞ ☞ ☞ ☞ ☞	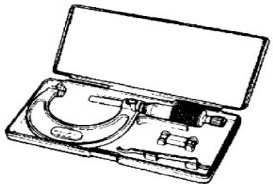	09915–63311 Compression gauge adapter ☞	
09915–64512 Compression gauge set (2500 kPa) 1. Gauge 2. Hose (Adapter)☞	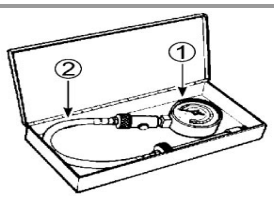	09916–10911 Valve lapper set ☞	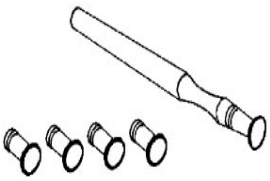
09916–14510 Valve lifter 1. Main unit 2. Attachment ☞ ☞	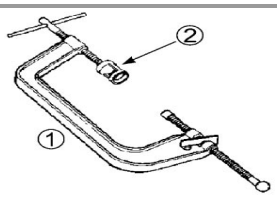	09916–14522 Valve lifter attachment ☞ ☞	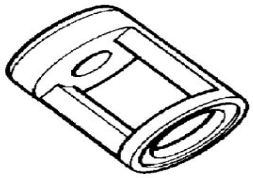
09916–33210 Valve guide reamer (ø4.5) ☞	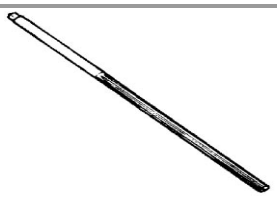	09916–33320 Valve guide outer reamer (ø9.8) ☞	
09916–34542 Reamer handle	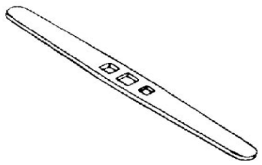	09916–43211 Valve guide installer / remover	

☞ ☞		☞ ☞	
09916–53380 Valve guide installer attachment ☞	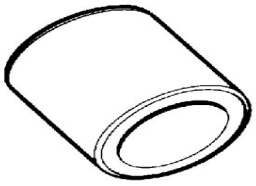	09916–77310 Piston ring compressor ☞	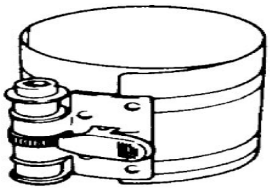
09916–84511 Tweezers ☞ ☞		09919–28620 Sleeve protector ☞ ☞	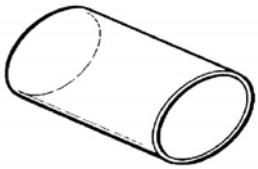
09940–14990 Engine mounting adjuster wrench ☞ ☞ ☞	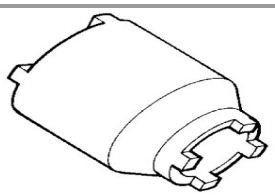		

Precautions for Fuel System

⚠WARNING:

- **Keep away from fire or spark.**
- **During disassembling, use care to minimize spillage of gasoline.**
- **Spilled gasoline should be wiped off immediately.**
- **Work in a well-ventilated area.**

⚠CAUTION:

- **To prevent the fuel system (fuel tank, fuel hose, etc.) from contamination with foreign particles, blind all openings.**
- **After removing the throttle body, tape the cylinder intake section to prevent foreign particles from entering.**

Fuel Pump Components

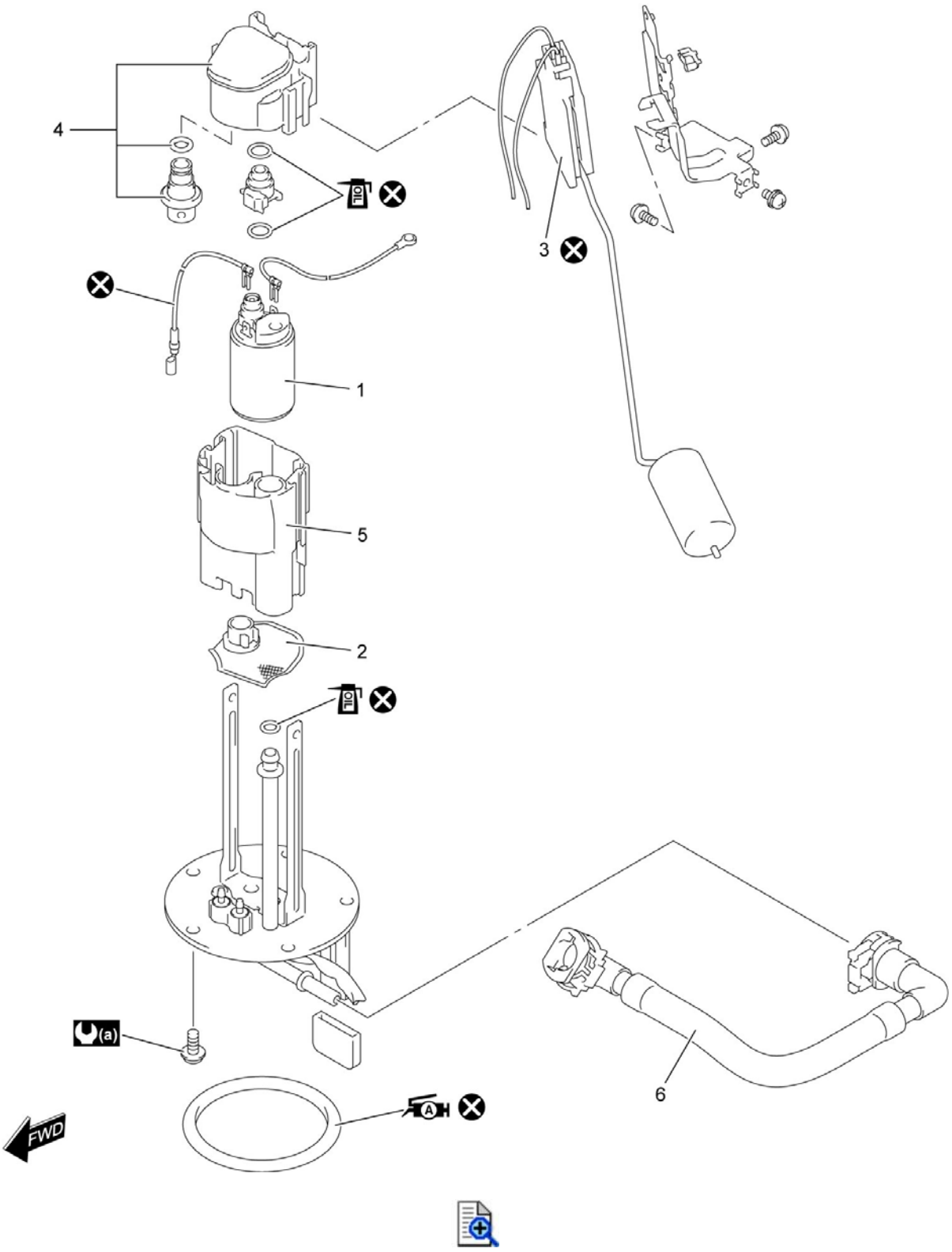

1.	Fuel pump	5.	Reservoir cup	:	Apply engine oil.

2.	Fuel mesh filter	6.	Fuel feed hose	:	Do not reuse.
3.	Fuel level gauge	:	10 N·m (1.0 kgf-m, 7.5 lbf-ft)		
4.	Fuel regulator assembly	:	Apply grease.		

Fuel Discharge Amount Inspection

1) Lift and support the fuel tank. ☞
2) Place a clean rag under the fuel feed hose (1) and disconnect the fuel feed hose (1). ☞

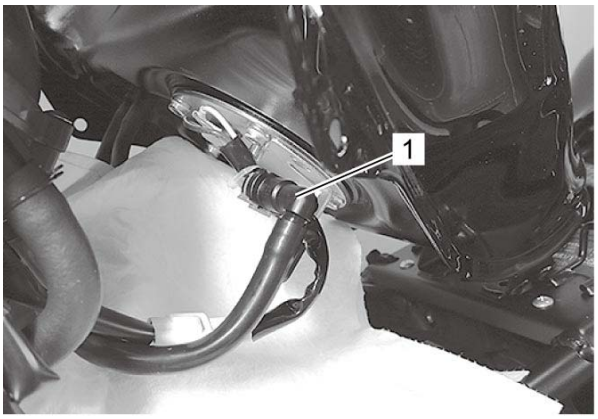

3) Connect a special tool to the fuel pump.
4) Place the measuring cylinder (1) and insert the special tool into the measuring cylinder (1).

Special Tool

(A): 09940–40220

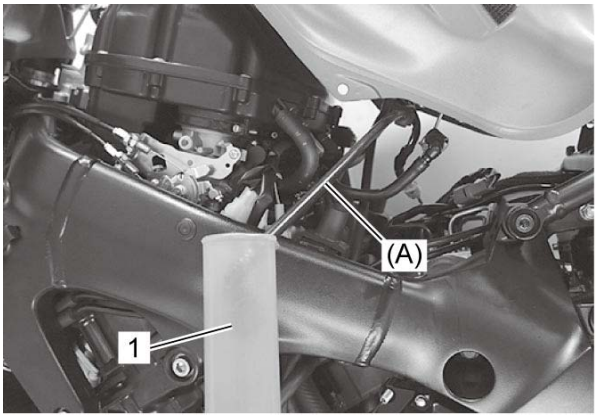

5) Remove the fuel pump relay. ☞
6) Connect the fuel pump relay lead wire terminal (between Y/R wire terminal (1) and R/W wire terminal (2)) using a jumper wire (3) for 10 seconds and measure the amount of fuel discharged. If the discharge amount is out of the specification, the following cause may be considered.

Possible cause	Correction
Clogged fuel mesh filter	Replace
Defective fuel pump	Replace

NOTE:

The battery must be in fully charged condition.

FP discharge amount

Per 10 seconds
[Standard]: 223 ml (7.55 US oz, 7.85 Imp oz) or more

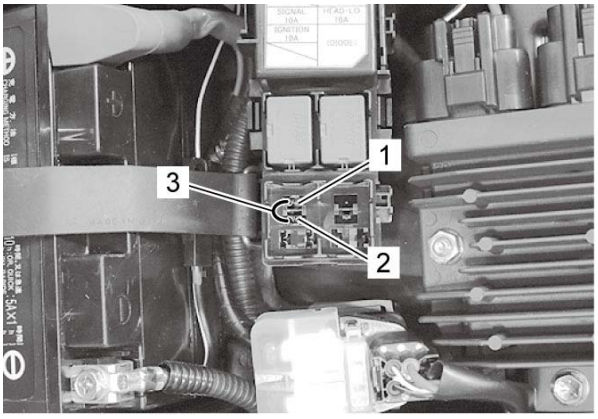

7) After finishing the fuel discharge inspection, install the removed parts.

Fuel Feed Hose Disconnection and Reconnection

Disconnection

1) Pull the retainer (1).

2) Disconnect the fuel feed hose joint (2) from fuel pipe.

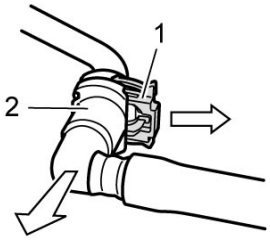

Reconnection

1) Insert the fuel feed hose joint (1) to fuel pipe.

2) Lock the retainer (2).

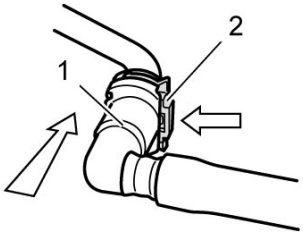

3) Confirm that fuel feed hose joint is not disconnected by hand.

Fuel Feed Hose Removal and Installation

Removal

1) Lift and support the fuel tank. ☞
2) Place a clean rag under the fuel feed hose (1).
3) Disconnect the fuel feed hose joints (2) and remove the fuel feed hose (1). ☞

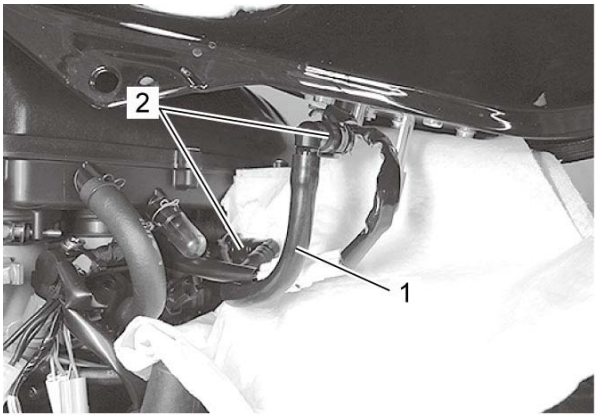

Installation

Install the fuel feed hose in the reverse order of removal.

Fuel Hose Inspection

1) Lift and support the fuel tank. ☞

2) Inspect the fuel feed hose (1) for damage and fuel leakage. If any defects are found, the fuel feed hose (1) must be replaced.

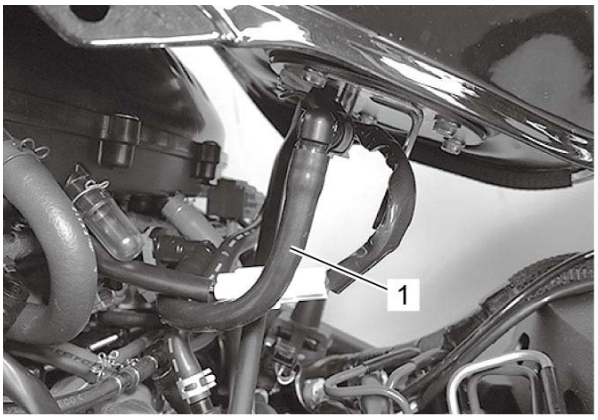

3) After finishing the fuel feed hose inspection, install the removed parts.

Fuel Injector / Fuel Delivery Pipe Removal and Installation

NOTE:
The fuel injector can be removed without removing the throttle body.

Removal

1) Remove the air cleaner box. ☞

2) Place a clean rag under the fuel feed hose (1) and disconnect the fuel feed hose (1). ☞

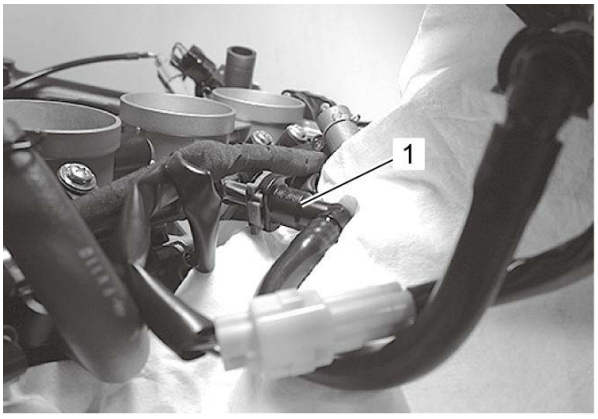

3) Remove the clamps (1) and disconnect the fuel injector couplers (2).

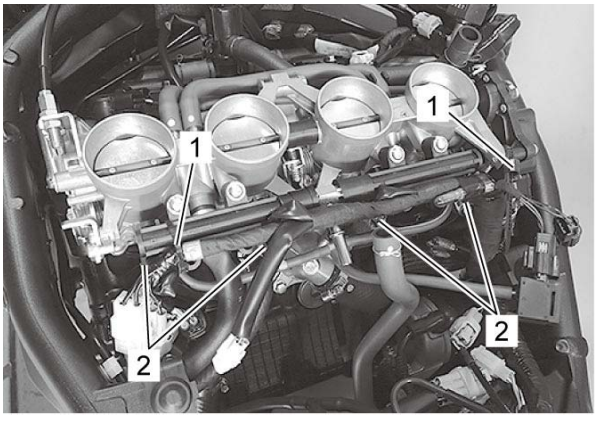

4) Remove the fuel delivery pipe assembly (1).

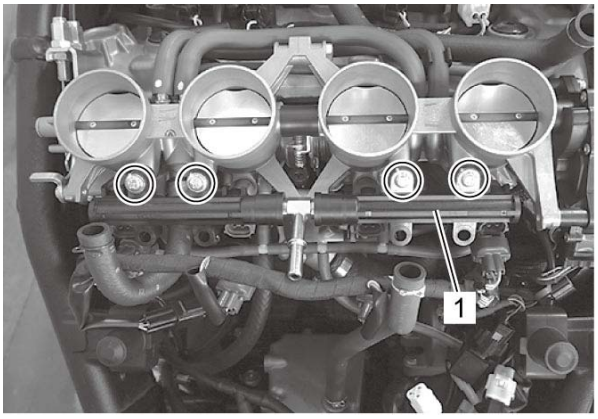

5) Remove the fuel injectors (1) from the fuel delivery pipes.

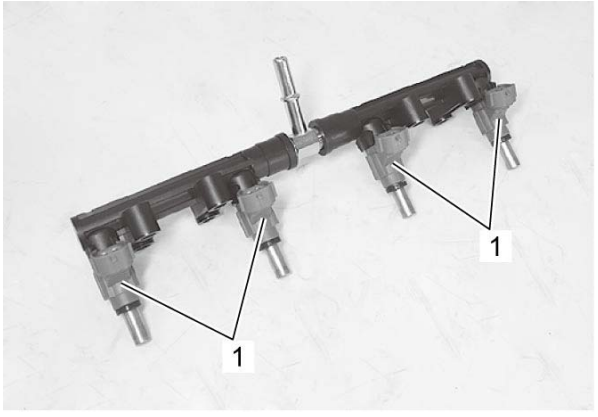

6) Remove the nipple joint (1) from the fuel delivery pipes (2).

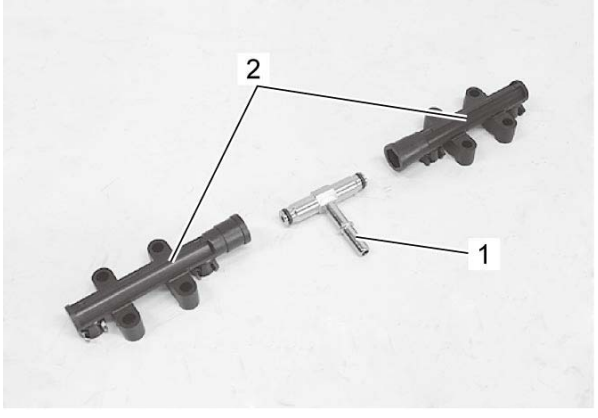

Installation

Install the fuel injector and fuel delivery pipe in the reverse order of removal. Pay attention to the following points:

- Apply a thin coat of engine oil to the new O-rings (1) and new cushion seals (2).

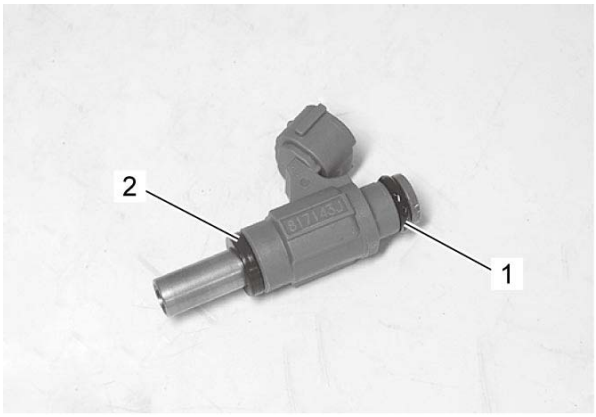

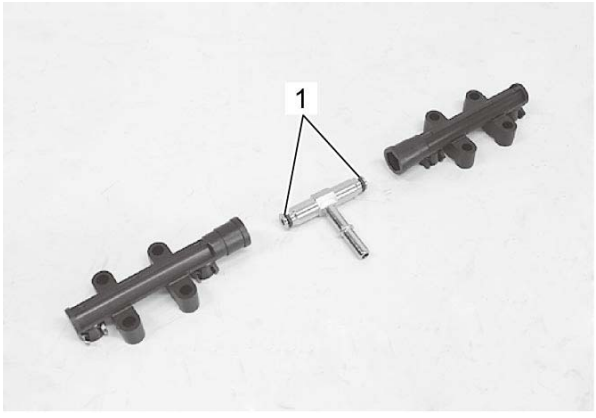

- Align the coupler (1) of injector with boss (2) of the delivery pipe, install each fuel injector by pushing it straight to the delivery pipe.

NOTICE:
Never turn the fuel injector while pushing it.

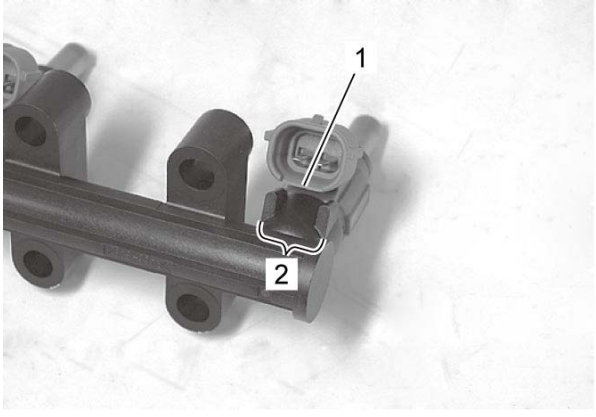

- Install the fuel delivery pipe assembly (1) to the throttle body.

NOTICE:
Never turn the fuel injectors while installing them.

- Tighten the fuel delivery pipe mounting screws (2) to the specified torque.

Tightening torque

Fuel delivery pipe mounting screw (a): 3.5 N·m (0.36 kgf-m, 2.60 lbf-ft)

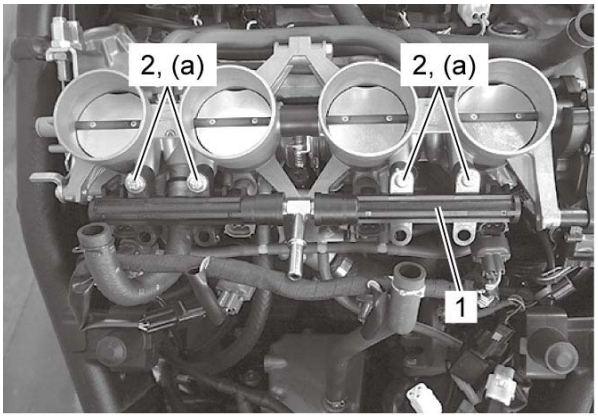

- Clamp the wiring harness. Refer to ***Wiring Harness Routing Diagram***.

Fuel Injector Inspection and Cleaning

Refer to ***Fuel Injector / Fuel Delivery Pipe Removal and Installation***.
Check the fuel injector filter for evidence of dirt and contamination. If present, clean and check for presence of dirt in the fuel line and fuel tank.



Fuel Injector On-vehicle Inspection

1) Lift and support the fuel tank. ☞
2) Turn the ignition switch OFF.
3) Disconnect the fuel injector coupler (1).

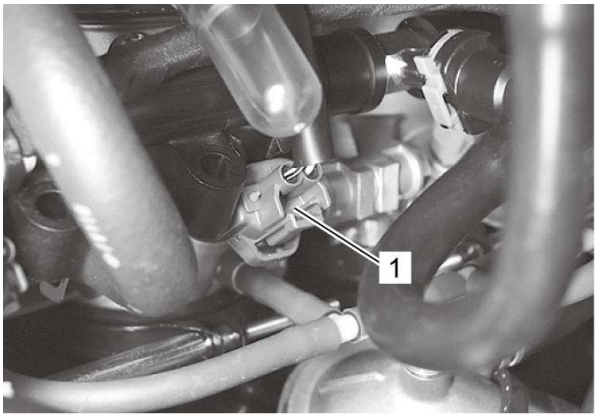

4) Measure the fuel injector resistance between terminals using the multi circuit tester. If resistance is out of specification, replace the fuel injector with a new one. ☞

Fuel injector resistance

20 °C (68 °F) [Standard]: 11.5 – 12.5 Ω

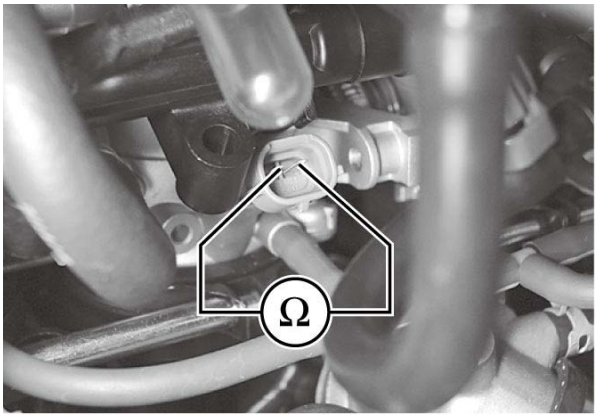

5) After finishing the fuel injector inspection, install the removed parts.

Fuel Level Gauge Inspection

Refer to ***Fuel Pump Assembly Removal and Installation***.
Measure the resistance at each fuel level gauge in float position. If the resistance is incorrect, replace fuel level gauge with a new one.

Float position		Resistance
"a"	266.6 mm (10.50 in)	9 – 11 Ω
"b"	12.1 mm (0.48 in)	213 – 219 Ω

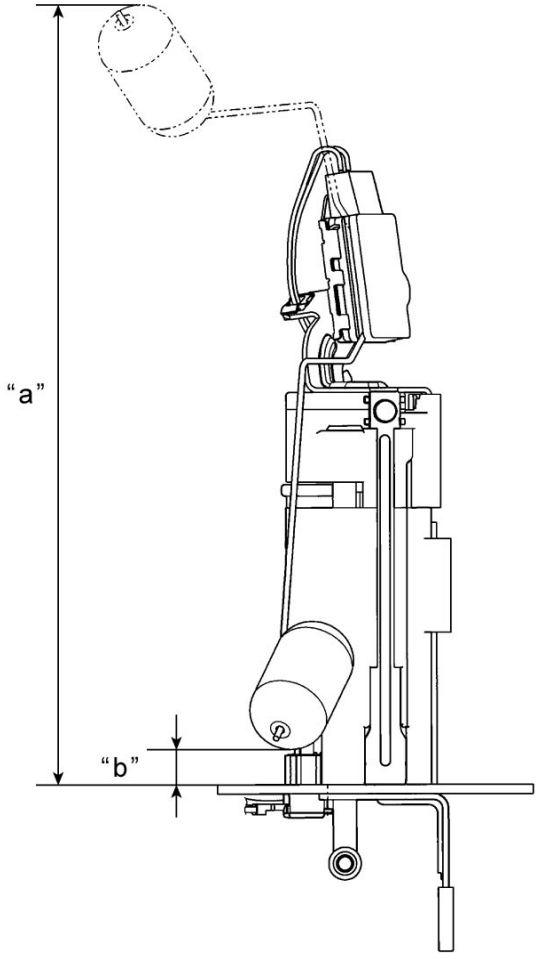

Fuel Mesh Filter Inspection

Refer to ***Fuel Pump Disassembly and Reassembly***.
Inspect the fuel mesh filter for dirt. If the fuel mesh filter is dirtied excessively, replace the fuel mesh filter with a new one.

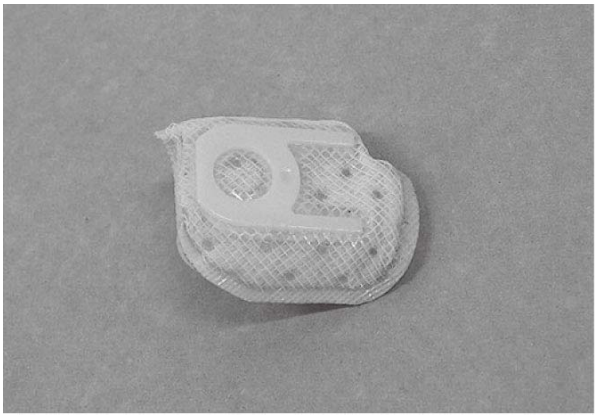

Fuel Pressure Inspection

1) Lift and support the fuel tank. ☞

2) Connect the immobilizer antenna coupler (1) and install the fuel tank lower cover (2). (If equipped)

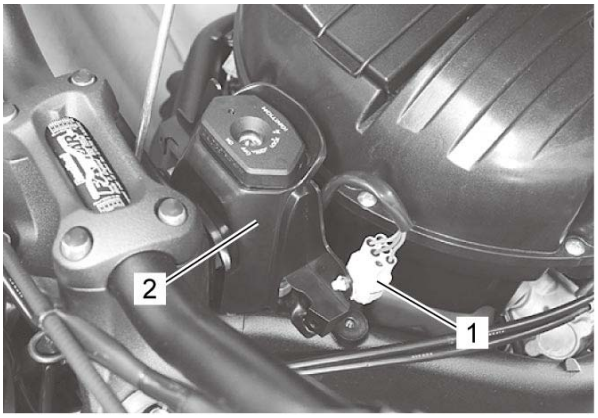

3) Place a clean rag under the fuel feed hose and remove the fuel feed hose (1). ☞

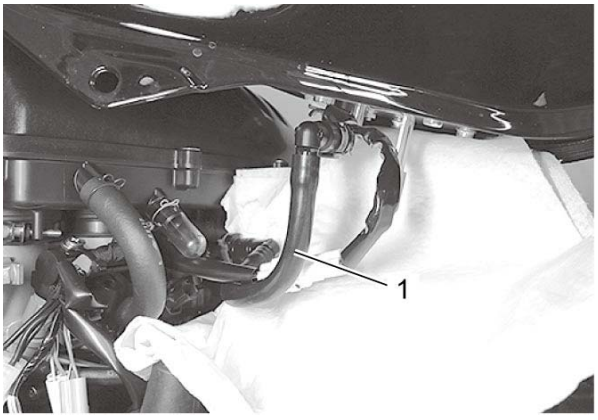

4) Install the special tools between the fuel pump and fuel delivery pipe.

Special Tool

(A): 09940–40211
(B): 09940–40220
(C): 09915–77331
(D): 09915–74521

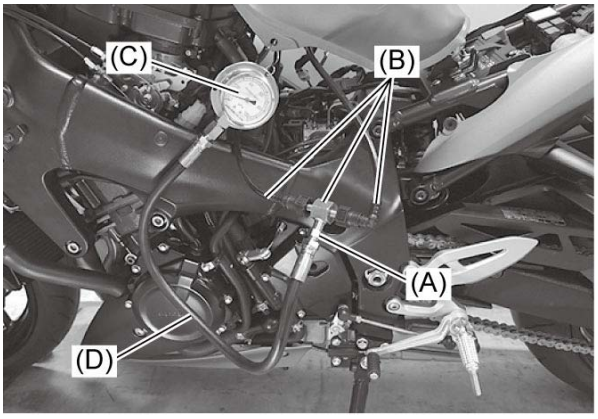

5) Turn the ignition ON and check for fuel pressure.
If the fuel pressure is lower than the specification, check for the followings:
- Fuel hose leakage
- Clogged fuel filter
- Pressure regulator
- Fuel pump

If the fuel pressure is higher than the specification, check for the followings:
- Fuel pump
- Pressure regulator

Fuel pressure

[Standard]: 289 – 299 kPa (2.95 – 3.04 kgf/cm^2, 42.0 – 43.3 psi)

6) Remove the special tools.

⚠WARNING:
Before removing the special tools, turn the ignition switch OFF and release the fuel pressure slowly.

7) After finishing the fuel pressure inspection, install the removed parts.

Fuel Pump Assembly Removal and Installation

Refer to ***Fuel Tank Removal and Installation***.
Reference: Fuel Pump Components

Removal

1) Remove the fuel pump mounting bolts (1) diagonally.
2) Remove the fuel pump assembly (2) and O-ring (3).

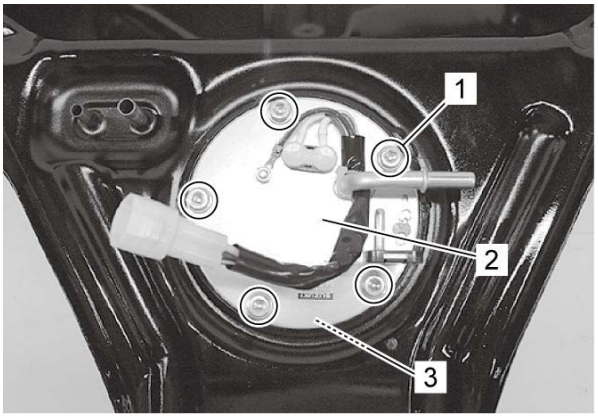

Installation

1) Apply grease to the new O-ring (1) and install it.
"A": Grease 99000–25011 (SUZUKI SUPER GREASE A)

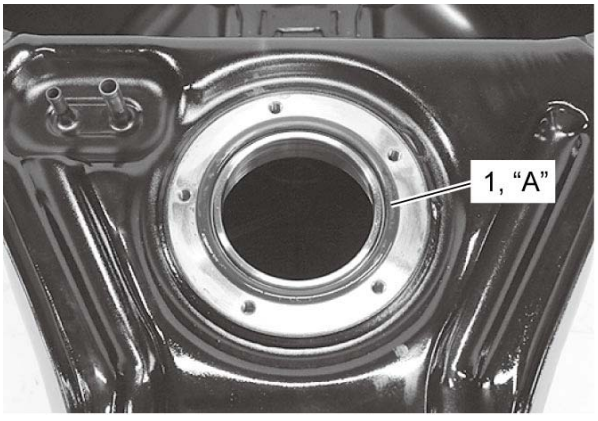

2) Install the fuel pump assembly (1) and first tighten all the fuel pump mounting bolts (2) lightly in the ascending order and then tighten them to the specified torque in the figure.

Tightening torque
Fuel pump mounting bolt (a): 10 N·m (1.0 kgf-m, 7.5 lbf-ft)

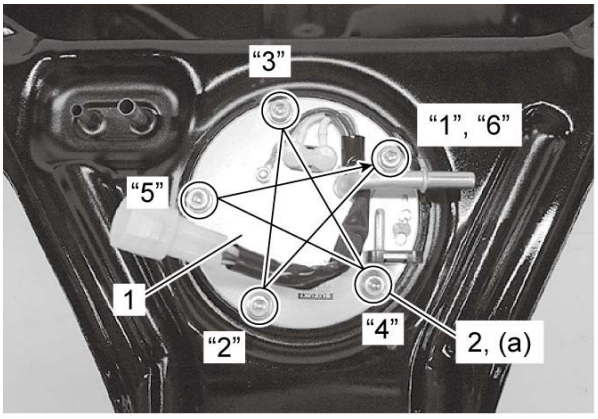
“3”
“1”, “6”
“5”
1
“2”
“4”
2, (a)

Fuel Pump Disassembly and Reassembly

Refer to ***Fuel Pump Assembly Removal and Installation***.
Reference: Fuel Pump Components

Disassembly

1) Disconnect the lead wires (1).

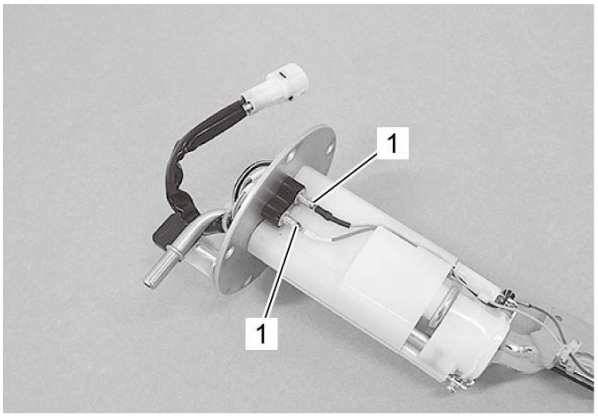

2) Remove the fuel level gauge (1).

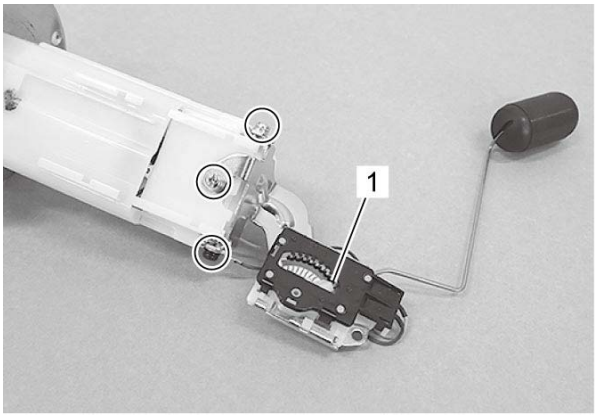

3) Remove the fuel regulator assembly (1).

NOTICE:
Never remove the fuel pressure regulator (2) from the fuel regulator (3).

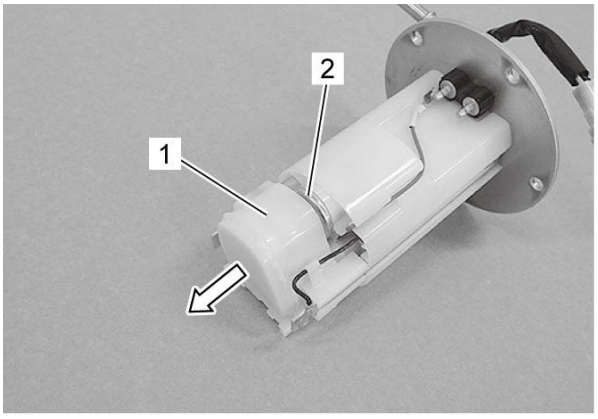

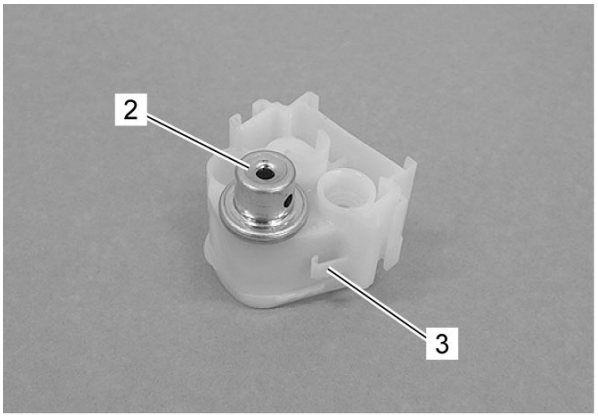

4) Remove the O-ring (1) and fuel pump assembly (2).

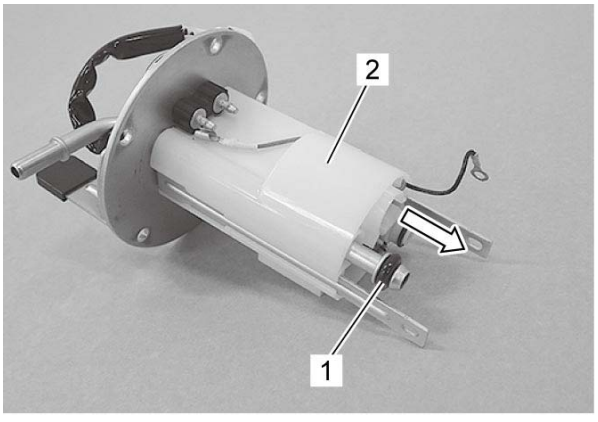

5) Remove the O-ring (1) and joint (2).
6) Remove the O-ring (3) and lead wires (4).

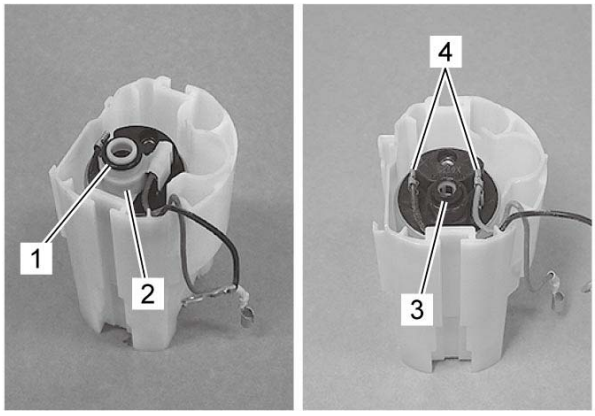

7) Remove the fuel mesh filter (1) and fuel pump (2) from the reservoir cup (3).

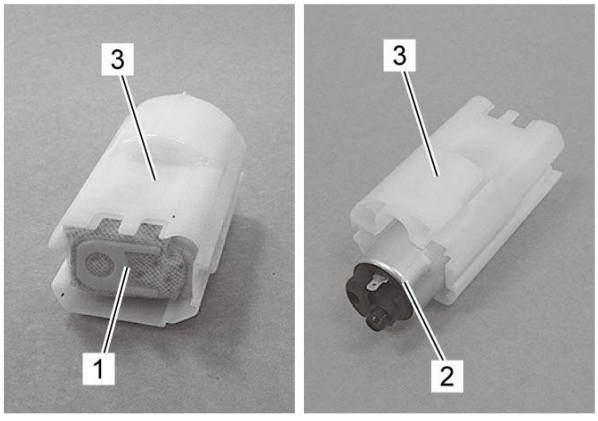

Reassembly

Reference: Fuel Mesh Filter Inspection

Reassemble the fuel tank pump in the reverse order of the disassembly. Pay attention to the following points:

- Replace the removed fuel pump (+) lead wire (1) and fuel level gauge (+) lead wire (fuel level gauge) (2) with new ones.
- Apply engine oil lightly to the new O-rings (3) and install them.

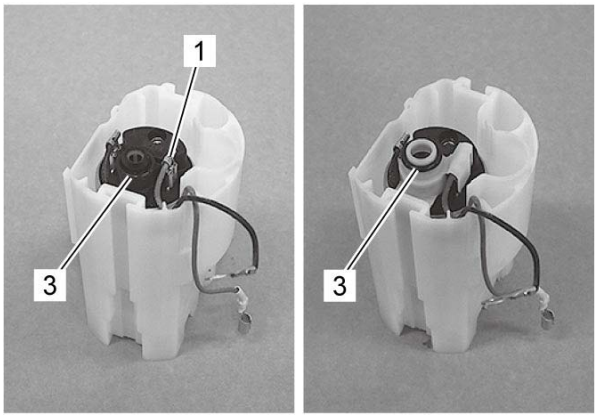

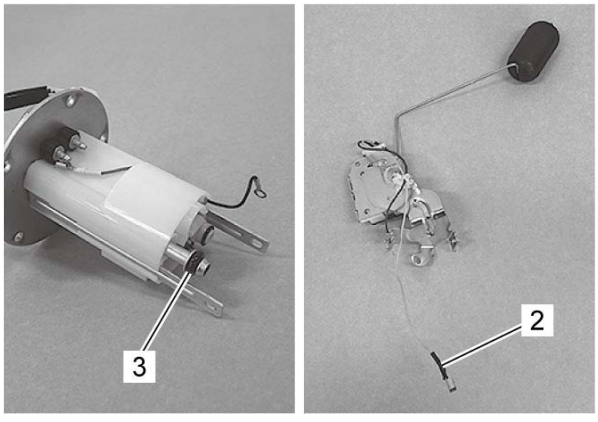

- Connect all lead wires securely so as not to cause contact failure.
- Route all lead wires securely.

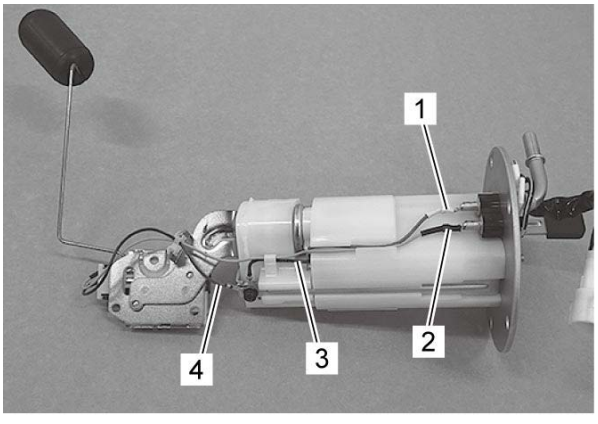

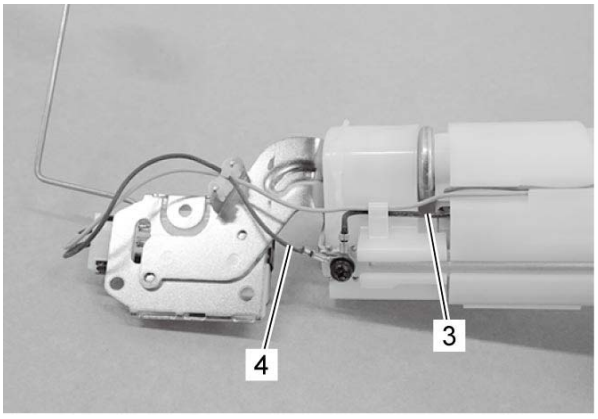

1.	Fuel pump (+) lead wire (Bl)
2.	Fuel level gauge (+) lead wire (Y)
3.	Fuel pump (–) lead wire (B)
4.	Fuel level gauge (–) lead wire (B)

Fuel Pump On-Vehicle Inspection

Turn the ignition switch ON and check that the fuel pump operates for a few seconds.
If the fuel pump motor does not make operating sound, inspect the fuel pump circuit connections, the fuel pump relay and TO sensor.

- Fuel pump relay: ☞
- TO sensor: ☞

If the fuel pump relay, TO sensor and fuel pump circuit connections are OK, the fuel pump may be faulty, replace the fuel pump with a new one. ☞

Fuel Pump Relay Inspection

1) Remove the front seat. ☞

2) Disconnect the battery (–) lead wire (1) and remove the fuel pump relay (2).

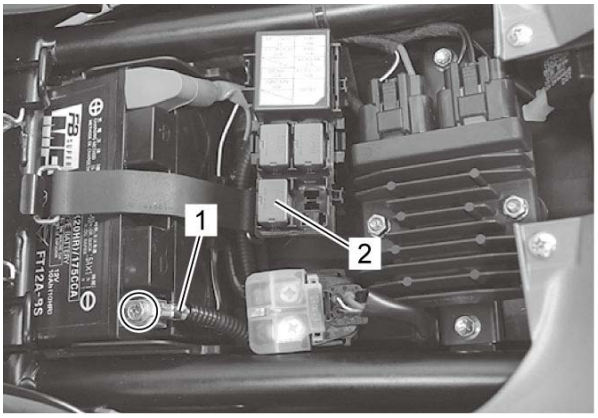

3) First, check for insulation with a circuit tester between terminals (3) and (4). Next, check for continuity between (3) and (4) with 12 V voltage applied, positive (+) to terminal (1) and negative (–) to terminal (2). If continuity does not exist, replace the relay with a new one.

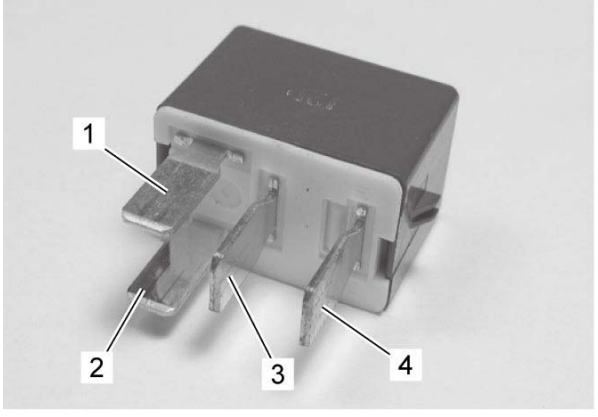

4) After finishing the fuel pump relay inspection, install the removed parts.

Fuel System Description

Fuel System

The fuel delivery system consists of the fuel tank (1), fuel pump (2) (including fuel pressure regulator (3) and fuel mesh filter (4)), fuel feed hose (5), fuel delivery pipes (6) and fuel injectors (7). There is no fuel return hose. The fuel in the fuel tank is pumped up by the fuel pump and pressurized fuel flows into the injectors installed in the fuel delivery pipes. Fuel pressure is regulated by the fuel pressure regulator. As the fuel pressure applied to the fuel injector (the fuel pressure in the fuel delivery pipe) is always kept at the specified level and the fuel is injected into the throttle body in conic dispersion when each injector opens according to the injection signal from the ECM.
The fuel relieved by the fuel pressure regulator flows back to the fuel tank.

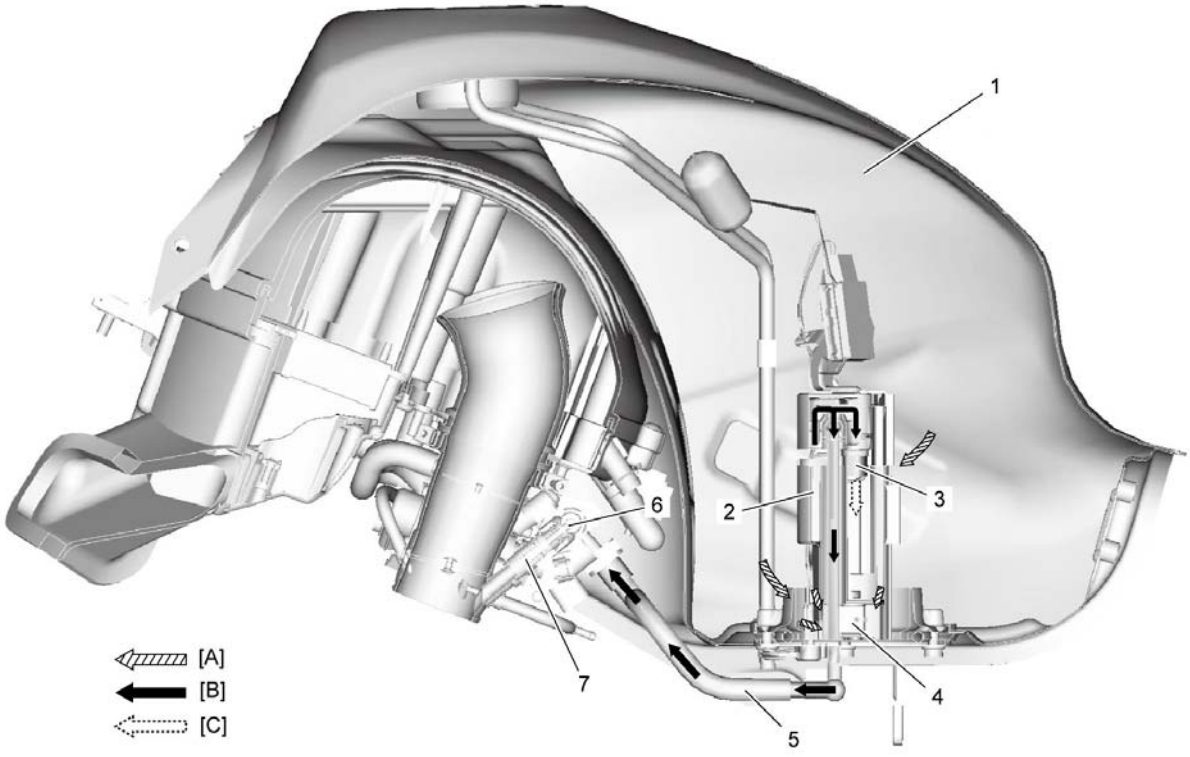

[A]:	Before-pressurized fuel	[B]:	Pressurized fuel	[C]:	Relieved fuel

Fuel Tank Construction

Fuel Tank Cover

Refer to ***Fuel Tank Cover / Frame Front Cover Construction***.

Fuel Tank

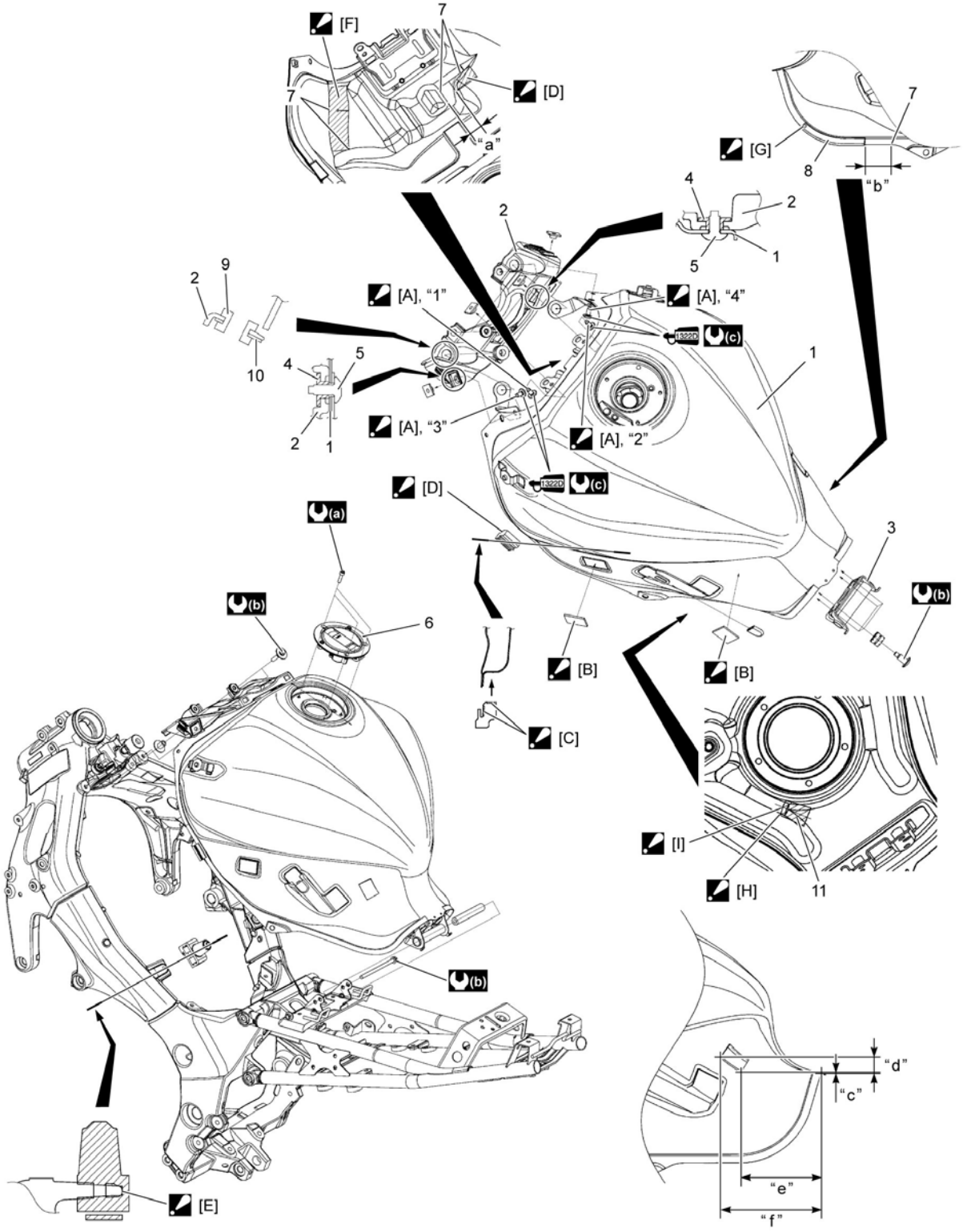

[A]:	Tighten the screws to the specified torque in order of “1” → “2” →(“3” ↔ “4”).	7.	End of curved surface
[B]:	Clean the adhesive surface before sticking the fastener. Press the fastener after sticking.	8.	Fuel tank molding (RH only)
[C]:	Adhere the cushion to the concave portion of fuel tank with a adhesive.	9.	Cushion
[D]:	Clean the adhesive surface before sticking the cushion. Press the cushion after sticking.	10.	Left fuel tank front bracket
[E]:	Insert the cushion to the frame until it contacts the frame edge.	11.	Fuel tank rear protector
[F]:	Clean the adhesive surface before sticking the protector. Press the protector after sticking.	“a”:	15 – 25 mm (0.59 – 0.98 in)
[G]:	Stick the fuel tank molding aligning with the spot welding.	“b”:	40 mm (1.6 in)
[H]:	Stick the fuel tank rear protector aligning with the end of curved surface.	“c”:	–2 – 4 mm (–0.07 – 0.15 in)
[I]:	Stick the center of fuel tank rear protector aligning with the center of arc.	“d”:	17.2 – 23.2 mm (0.678 – 0.913 in)
1.	Fuel tank	“e”:	101 – 107 mm (3.98 – 4.21 in)
2.	Fuel tank front bracket	“f”:	127.7 – 133.7 mm (5.028 – 5.263 in)
3.	Fuel tank rear bracket	(a):	3 N·m (0.31 kgf-m, 2.25 lbf-ft)
4.	Nut	(b):	10 N·m (1.0 kgf-m, 7.5 lbf-ft)
5.	Screw	(c):	5.5 N·m (0.56 kgf-m, 4.05 lbf-ft)
6.	Fuel tank filler cap	1322D:	Apply thread lock to the thread part.

Fuel Tank Removal and Installation

Removal

1) Remove the frame front covers. ☞

2) Remove the fuel tank lower cover. ☞

3) Remove the fuel tank front bolts (1).

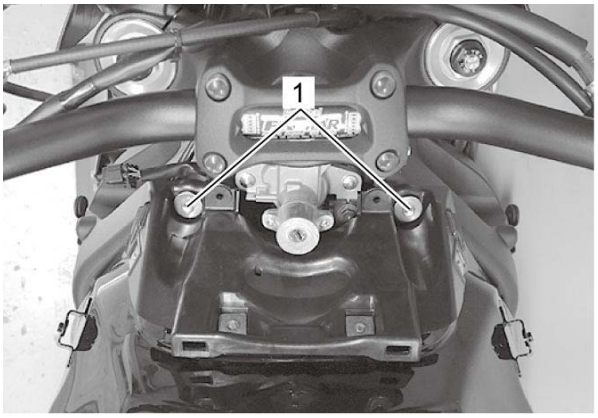

4) Lift and support the fuel tank with the prop stay (if equipped) or the like.



5) Disconnect the fuel pump lead wire coupler (1).

6) Place a clean rag under the fuel feed hose (2) and disconnect the fuel feed hose (2). ☞

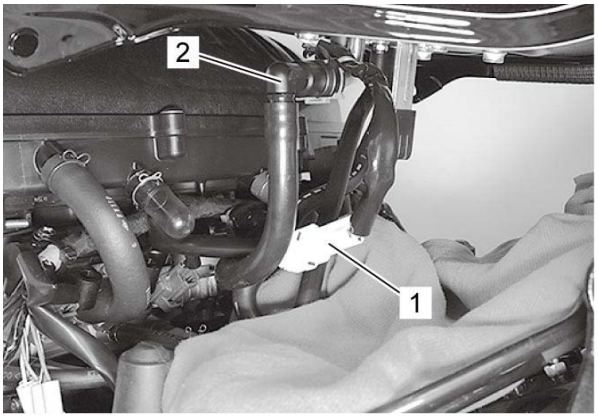

7) Disconnect the fuel tank breather hose (1) and fuel tank water drain hose (2).

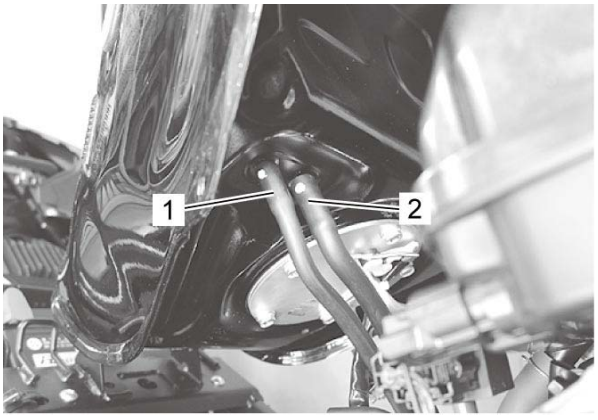

8) Remove the fuel tank (1).

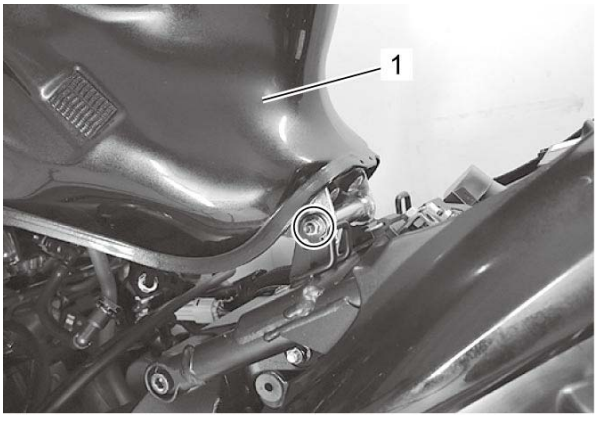

Installation

Install the fuel tank in the reverse order of removal. Pay attention to the following points:

NOTICE:
Be sure not to bend or twist the hoses when installing.

- Connect the fuel tank water drain hose and fuel tank breather hose. ☞
- Tighten the fuel tank rear bolt and fuel tank front bolts in the following procedures:
  a. Temporarily tighten the fuel tank rear bolt (1).
  b. Tighten the fuel tank front bolts (2) to the specified torque.

  Tightening torque

  Fuel tank front bolt (a): 10 N·m (1.0 kgf-m, 7.5 lbf-ft)

  c. Tighten the fuel tank rear bolt (1) to the specified torque.

  Tightening torque

  Fuel tank rear bolt (b): 10 N·m (1.0 kgf-m, 7.5 lbf-ft)

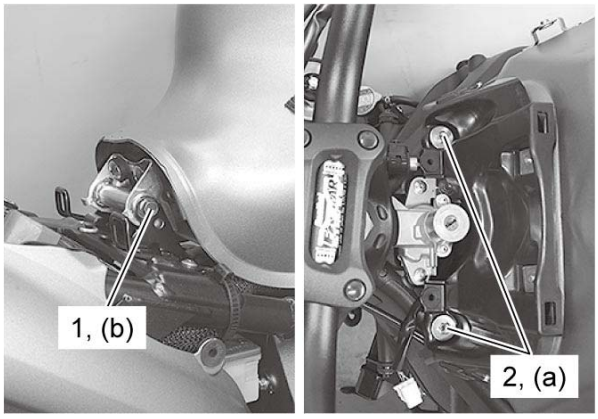

Fuel Tank Water Drain Hose and Fuel Tank Breather Hose Routing Diagram

Without EVAP Control System

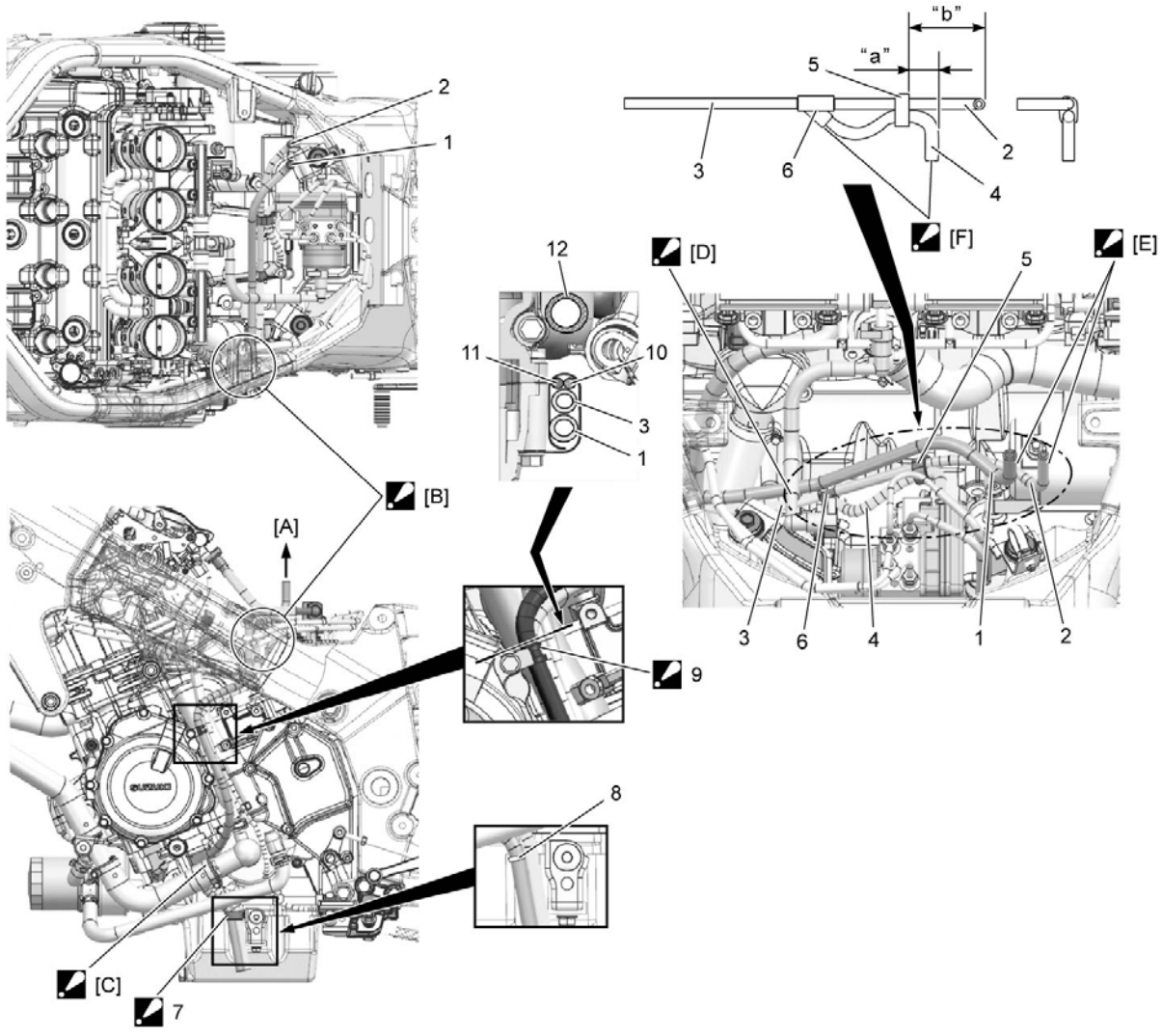

[A]:	To fuel tank	5.	Breather hose clamp
[B]:	Pass the hoses inside of the brake pipes (if equipped).	6.	3-way joint
[C]:	Pass the fuel tank water drain hose and fuel tank breather hose No. 2 inside of the radiator hose.	7.	Clamp : Clamp the white marking of the hose within 10 mm (0.39 in).
[D]:	Pass the hoses under the fuel feed hose.	8.	White mark
[E]:	Face the white marking of the hose to right side.	9.	Clamp : Clamp the marking of the hose.

[F]:	Match the direction of 3-way joint and fuel tank breather hose No. 3.	10.	Side-stand switch lead wire
1.	Fuel tank water drain hose	11.	HO2 sensor lead wire
2.	Fuel tank breather hose No. 1	12.	Water bypass hose
3.	Fuel tank breather hose No. 2	“a”:	10 – 30 mm (0.40 – 1.18 in)
4.	Fuel tank breather hose No. 3	“b”:	90 – 110 mm (3.55 – 4.33 in)

With EVAP Control System

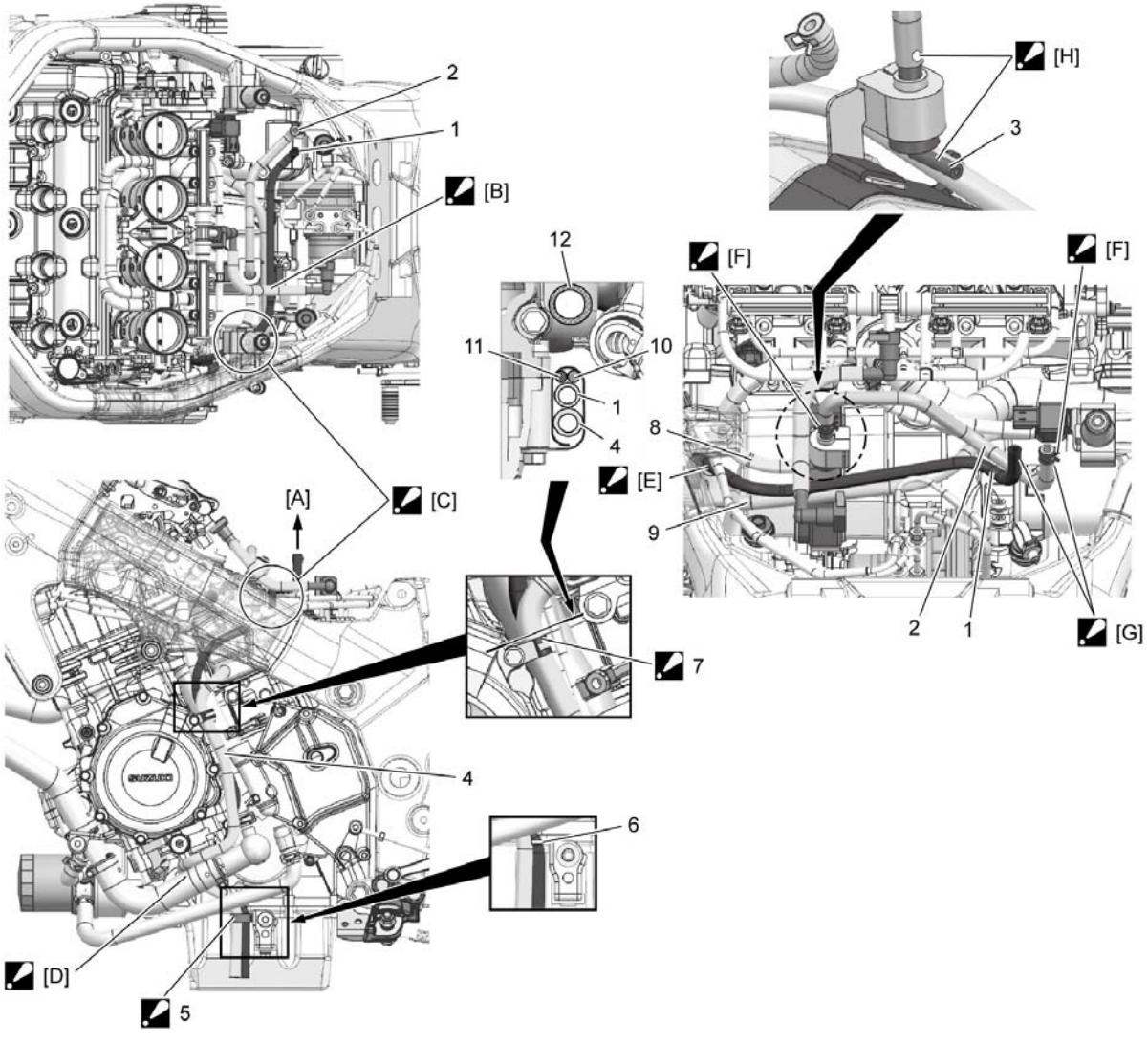

[A]:	To fuel tank	3.	Fuel shut-off valve
[B]:	Pass the fuel tank water drain hose under the fuel feed hose.	4.	Canister drain hose

[C]:	Pass the fuel tank water drain hose inside of the brake pipes (if equipped).	5.	Clamp : Clamp the white marking of the hose within 10 mm (0.39 in).
[D]:	Pass the drain hoses inside of the radiator hose.	6.	White mark
[E]:	Pass the fuel tank water drain hose between the surge hose and purge hose No. 1.	7.	Clamp : Clamp the marking of the hose.
[F]:	Face the clamp end to right side.	8.	Surge hose
[G]:	Face the white marking of the hose to right side.	9.	Purge hose No. 1
[H]:	Match the direction of yellow marking of the hose and fuel shut-off valve.	10.	Side-stand switch lead wire
1.	Fuel tank water drain hose	11.	HO2 sensor lead wire
2.	Fuel tank breather hose	12.	Water bypass hose

Tightening Torque Specifications

Fastening part	Tightening torque			Note
	N·m	kgf-m	lbf-ft	
Fuel tank front bolt	10	1.0	7.5	☞
Fuel tank rear bolt	10	1.0	7.5	☞
Fuel pump mounting bolt	10	1.0	7.5	☞
Fuel delivery pipe mounting screw	3.5	0.36	2.60	☞

Reference:
For the tightening torques of fasteners not specified in this page, refer to:
Fuel Tank Construction
Fuel Pump Components
Fasteners Information

Recommended Service Material

Material	SUZUKI recommended product or Specification		Note
Grease	SUZUKI SUPER GREASE A	P/No.: 99000–25011	☞

NOTE:
Required service material(s) is also described in:
Fuel Tank Construction
Fuel Pump Components

Special Tool

09915–74521	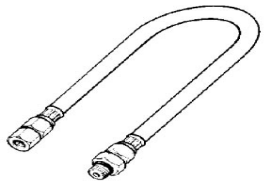	09915–77331	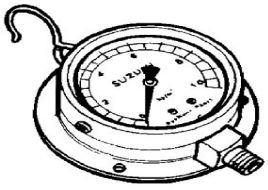
Oil pressure gauge hose		Oil pressure gauge (1000 kpa)	
☞		☞	
09940–40211	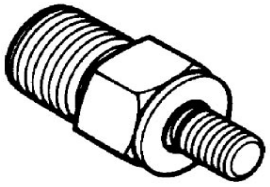	09940–40220	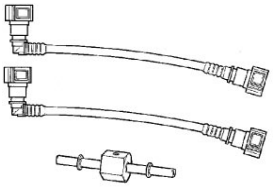
Fuel pressure gauge adapter		Fuel pressure gauge attachment	
☞		☞ ☞	

Precautions for Exhaust System

WARNING:
To avoid the risk of being burned, do not touch the exhaust system when the system is hot.

NOTICE:
After installation of the muffler, make sure that there is no leakage of exhaust gas.

Exhaust System Components

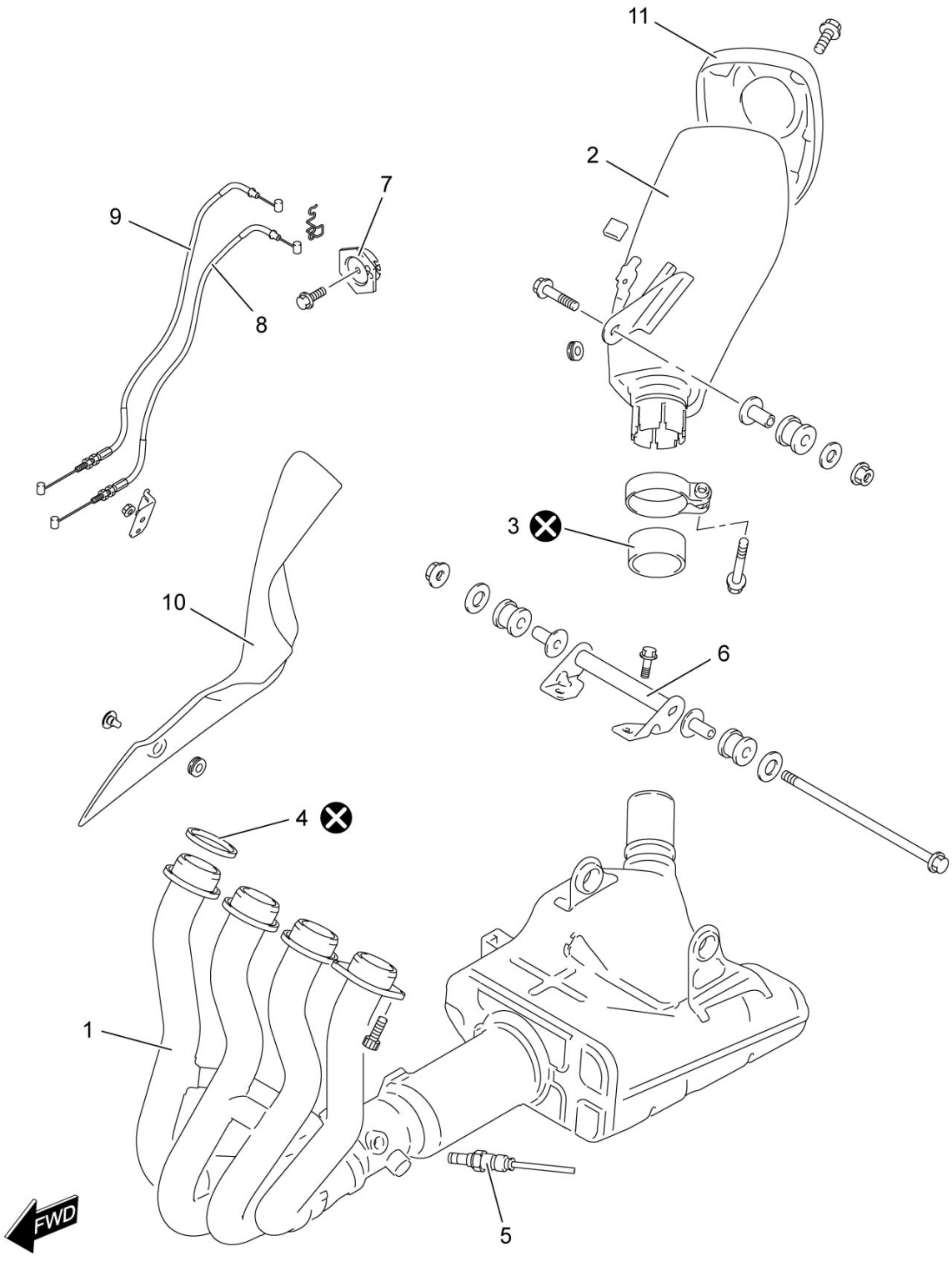

1.	Exhaust pipe	5.	HO2 sensor	9.	EXCV cable No. 2
2.	Muffler	6.	Exhaust support bracket	10.	Muffler front cover

3.	Muffler connector	7.	EXCVA pulley	11.	Muffler rear cover
4.	Exhaust pipe gasket	8.	EXCV cable No. 1	 :	Do not reuse.

EXCVA / EXCV Cable Removal and Installation

Reference: Exhaust Control System Construction
Reference: Exhaust System Components

Removal

NOTICE:
When the EXCV cables are removed from the EXCV pulley and turn the ignition switch ON, the EXCV cables will be coiled up. In this case, EXCVA must be removed.
Do not turn the ignition switch ON after the EXCV cables are removed from the EXCV pulley.

NOTE:
Before removing the EXCV cables, be sure to set the EXCVA pulley to the adjustment position.

1) Turn the ignition switch OFF.
2) Connect the special tool to the mode select coupler. ☞
3) After turning the mode select switch ON, turn the ignition switch ON.
4) Check that the cable slots of the EXCVA pulley comes to the middle (Adjustment position) (1).
5) Turn the ignition switch OFF.

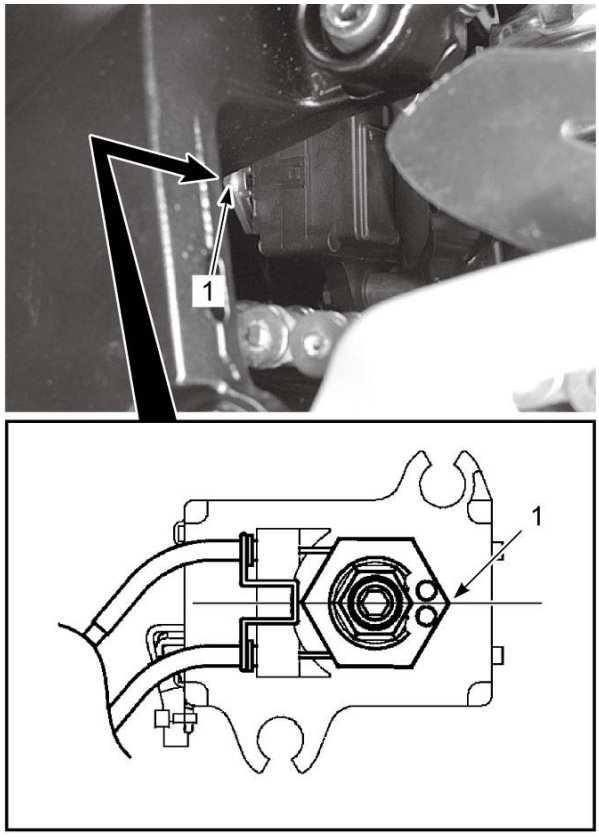

6) Remove the following parts.
- Right under cowling (GSX-S1000/A): ☞
- Right side cowling assembly (GSX-S1000F/FA): ☞

7) Remove the EXCV cable bracket (1).

8) Remove the EXCV cables (2) from the EXCV pulley (3).

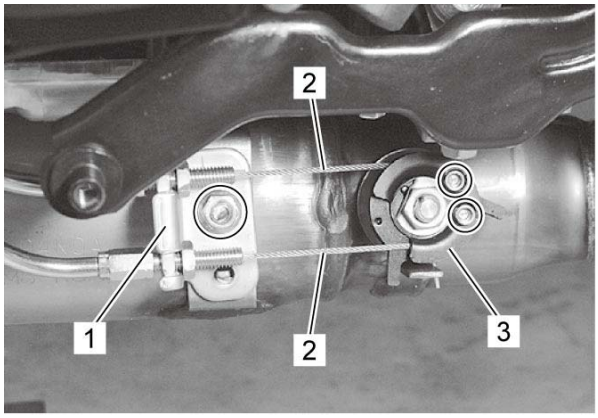

9) Remove the left frame rear upper cover. ☞

10) Remove the rear shock absorber. ☞

11) Remove the clamps (1) and disconnect the EXCVA couplers (2).

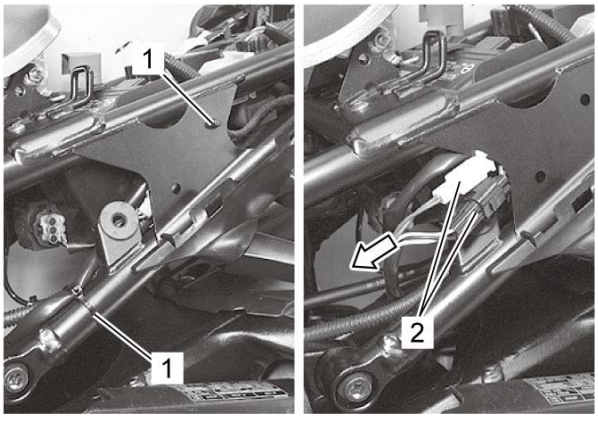

12) Remove the EXCVA (1).

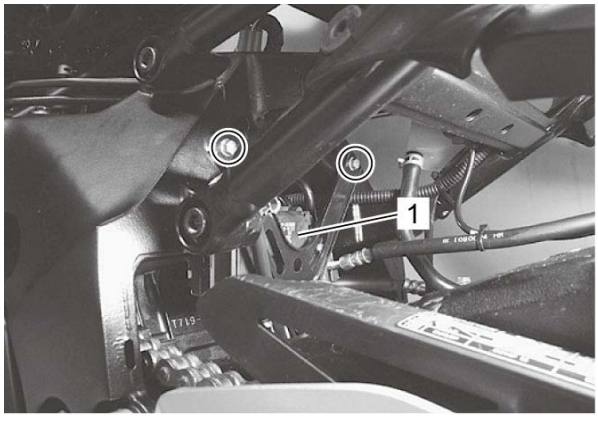

13) Loosen the lock-nuts (1).

14) Remove the EXCV cables (2) from its bracket (3).

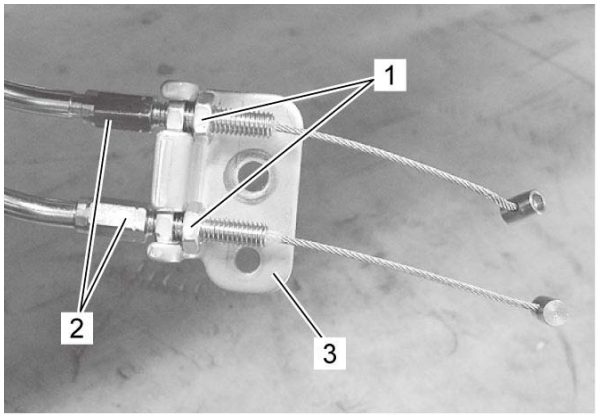

15) Remove the EXCVA (1) with the EXCV cables.

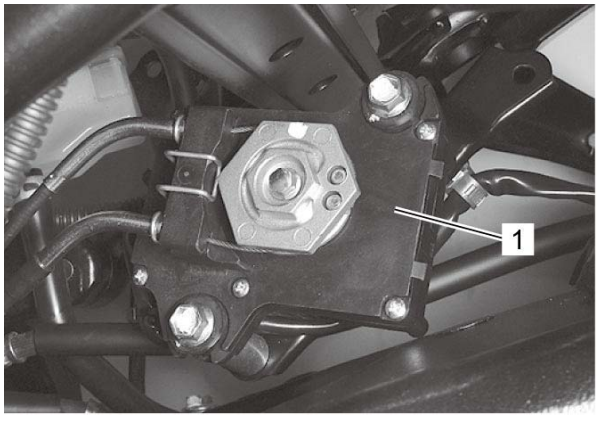

16) Remove the guide (1).

17) Disconnect the EXCV cables (2) from the EXCVA pulley (3).

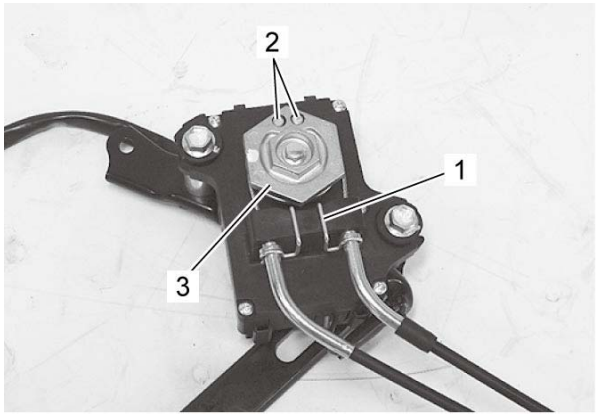

18) Hold the pulley with a box end wrench, and remove the pulley mounting bolt (1).

NOTICE:
- **When loosening or tightening the pulley bolt, be sure to fix the pulley with a box end wrench, or EXCVA may get damaged.**
- **Do not use the box end wrench to turn EXCVA pulley so as not to cause damage to the internal gear of EXCVA.**

19) Remove the pulley (2) from the EXCVA body.

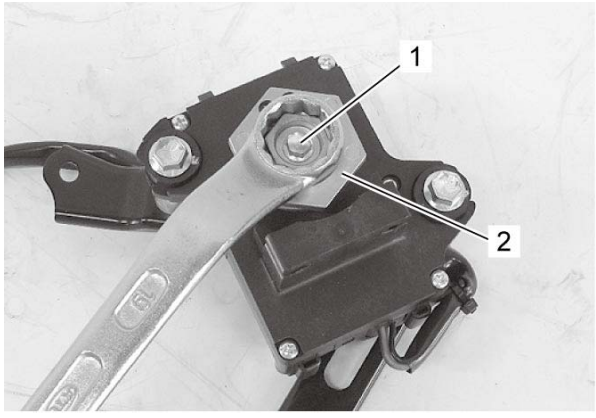

20) Remove the clamp (1), bracket (2) and spacers (3).

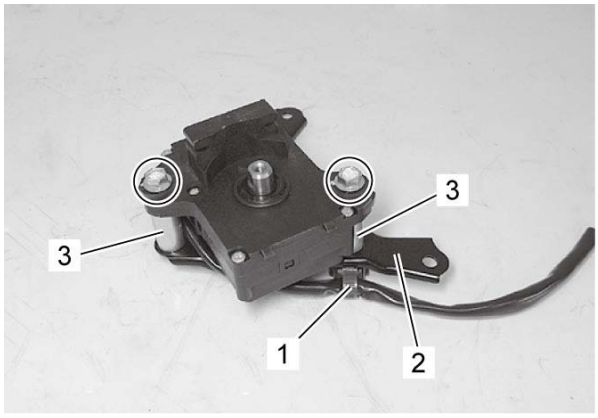

Installation

Reference: EXCVA Pulley Inspection

1) Install the spacers (1), bracket (2) and clamp (3).

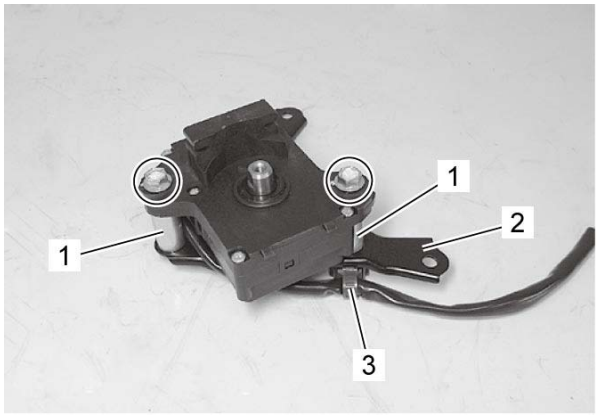

2) Install the EXCVA pulley to the shaft.

> **NOTE:**
> **Align the shaft's line (1) and cable slots (2).**

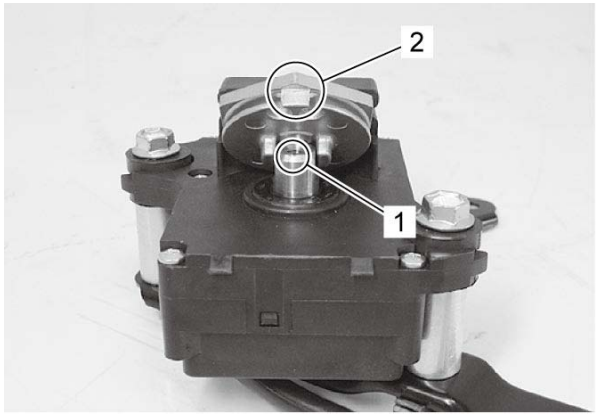

3) Hold the pulley with a box end wrench, and then tighten the pulley bolt (1) to the specified torque.

NOTICE:
When loosening or tightening the pulley bolt, be sure to fix pulley with a box end wrench, or EXCVA may get damaged.

Tightening torque

EXCVA pulley bolt (a): 5 N·m (0.51 kgf-m, 3.70 lbf-ft)

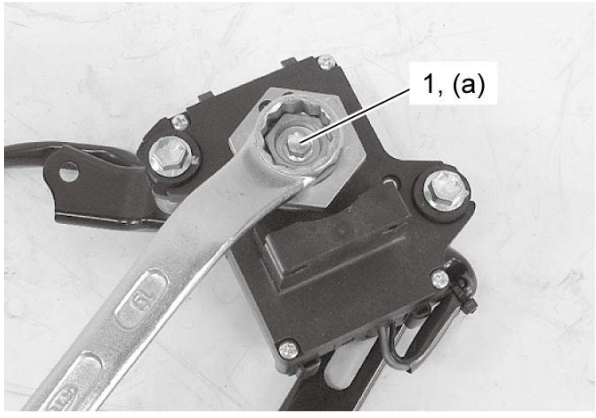

4) Temporarily install the EXCV cable No. 1 (04K0CL) (1) and No. 2 (04K0OP) (2) to the EXCV cable bracket (3) and install them to the center exhaust pipe.

NOTE:
The EXCV cables are identified by the letters.
No. 1 cable (1): 04K0CL
No. 2 cable (2): 04K0OP

5) Install the EXCV cable No. 1 (1) and No. 2 (2) to the EXCV pulley.

6) Adjust the inner cable length “a” of No. 1 cable (1) in 44.5 – 45.5 mm (1.75 – 1.79 in) by turning the adjuster (4), then tighten the lock-nut (5) to the specified torque.

Tightening torque

EXCV cable lock-nut (a): 4.5 N·m (0.46 kgf-m, 3.35 lbf-ft)

7) Adjust the inner cable length “b” of No. 2 cable (2) in 50 – 51 mm (1.97 – 2.01 in) by turning the adjuster (6), then tighten the lock-nut (7) to the specified torque.

Tightening torque

EXCV cable lock-nut (a): 4.5 N·m (0.46 kgf-m, 3.35 lbf-ft)

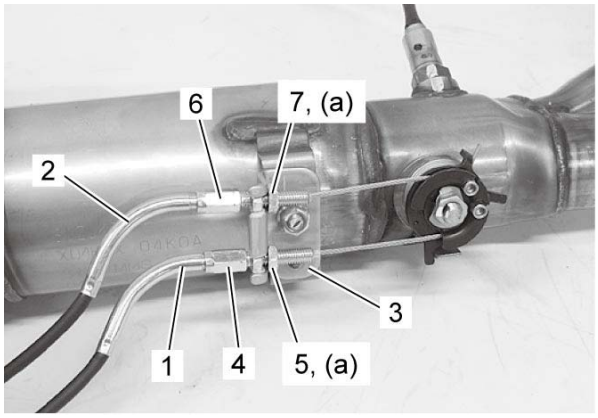

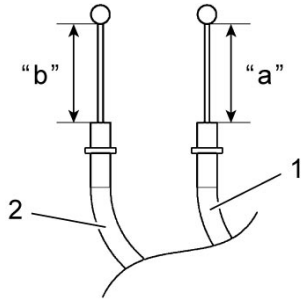

8) Remove the EXCV cable bracket (1) by removing the nut (2).

9) Remove the EXCV cables (3) from the EXCV pulley (4).

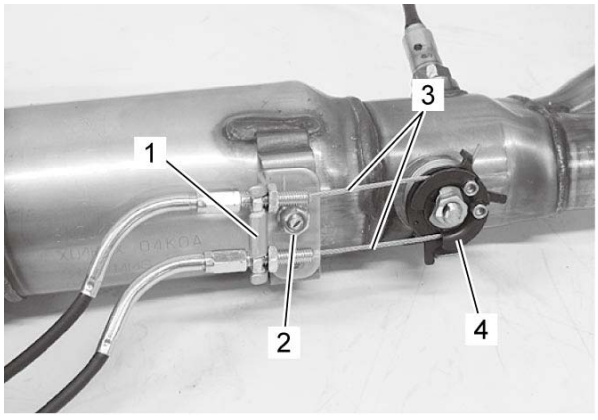

10) Install the EXCV cable No. 1 (1) and No. 2 (2) to the EXCVA pulley (3).

11) Install the guide (4).

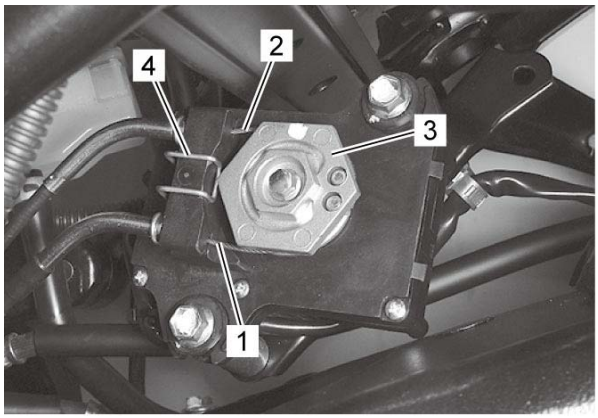

12) Install the EXCVA (1).

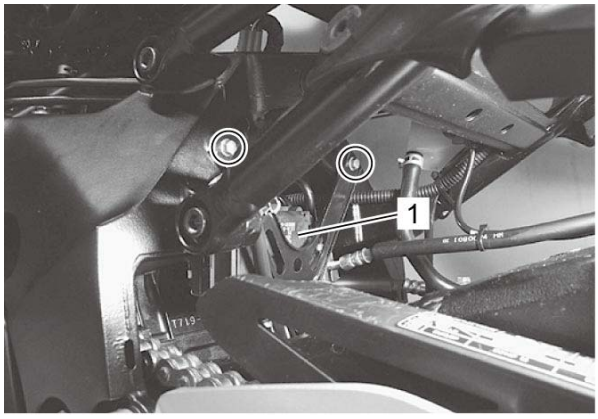

13) Connect the EXCVA couplers (1) and install the clamps (2).

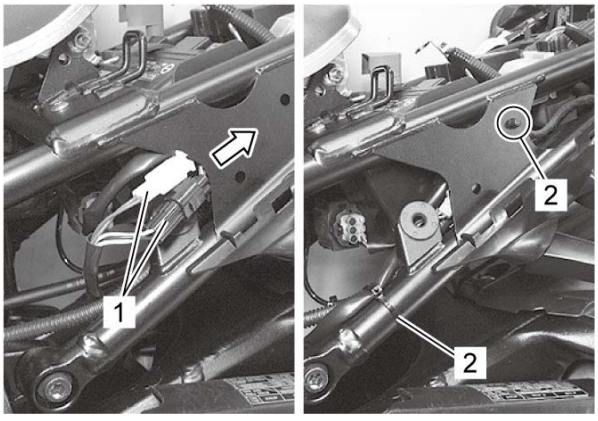

14) Install the left frame rear upper cover. ☞

15) Install the rear shock absorber. ☞

16) Install the EXCV cable No. 1 (1) and No. 2 (2) to the EXCV pulley (3).

17) Install the EXCV cable bracket (4) and tighten the nut (5) to the specified torque.

Tightening torque

EXCV cable bracket mounting nut (a): 11 N·m (1.1 kgf-m, 8.5 lbf-ft)

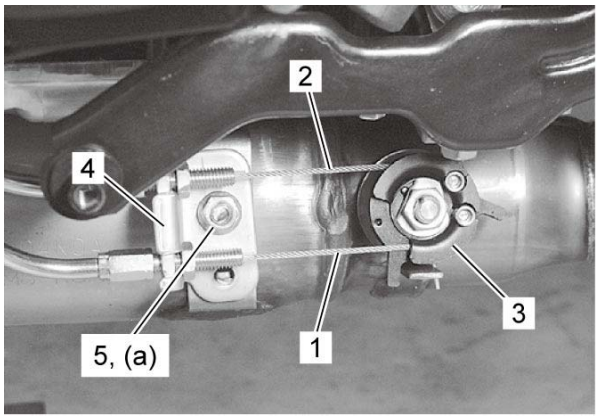

18) Inspect the EXCVA position sensor voltage. Refer to ***EXCVA Adjustment***.

EXCVA Adjustment

Step 1

1) Set the EXCVA to the adjustment position. Refer to ***EXCVA / EXCV Cable Removal and Installation***.

Step 2

1) Turn the ignition switch OFF.

2) Connect the special tool to the mode select coupler. ☞

3) Turn the ignition switch ON and check the operation of EXCVA (1).
(EXCVA operation order: Full open → Full close → Full open)

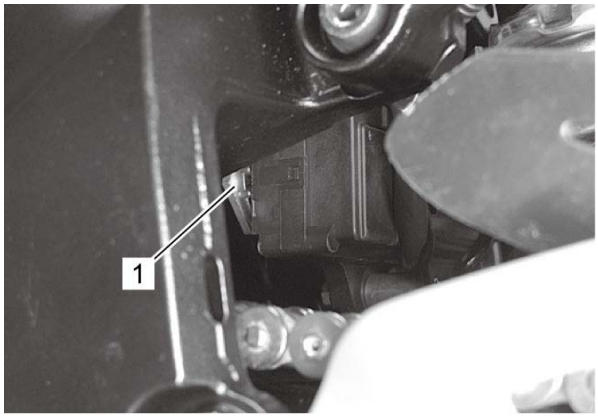

4) Turn the mode select switch ON. If DTC “C46” is not indicated on the LCD display (1), the adjustment is correctly completed. If “C46” is indicated, repeat the procedures from Step 3 to Step 4.

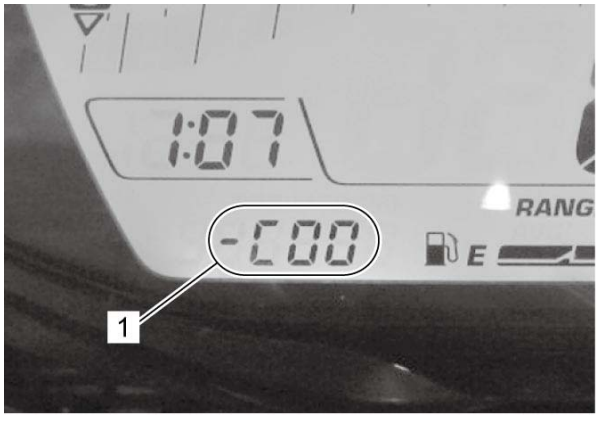

Step 3

1) Turn the ignition switch OFF.

2) Remove the following parts.
- Right under cowling (GSX-S1000/A): ☞
- Right side cowling assembly (GSX-S1000F/FA): ☞

3) Remove the rear seat. ☞

4) Set up the SDS tool referring to the SDS operation manual for further details.

5) Turn the ignition switch ON.

6) Click “Exhaust valve drive control”.

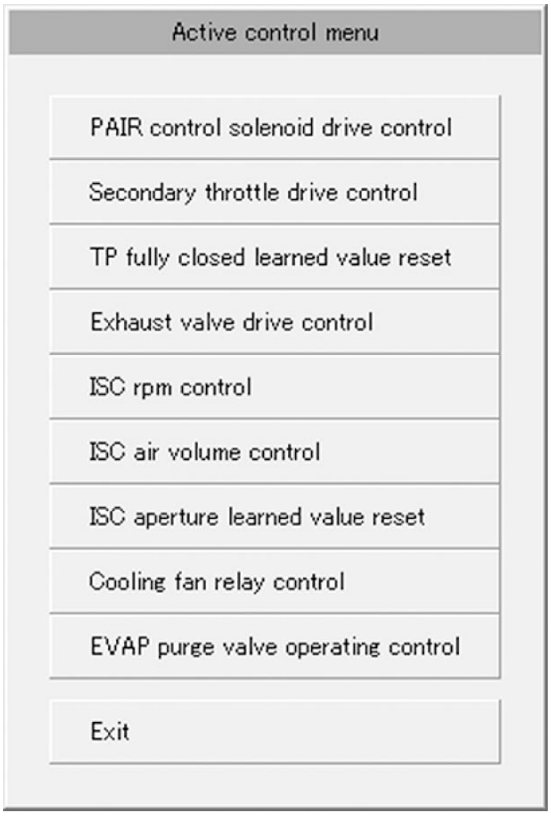

7) Click “Fully closed”.

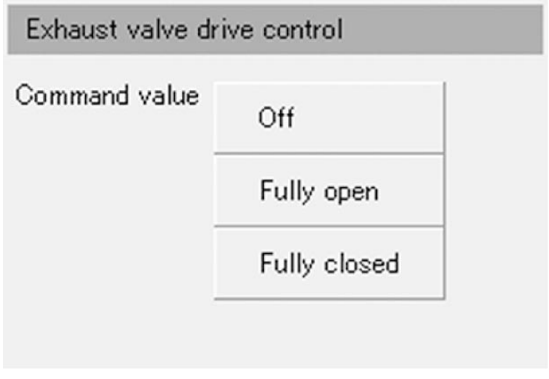

8) Measure the EXCVA position sensor output voltage between the Y wire and W wire at EXCV fully closed position.

EXCVA position sensor output voltage

Closed [Standard]: 0.45 – 1.40 V

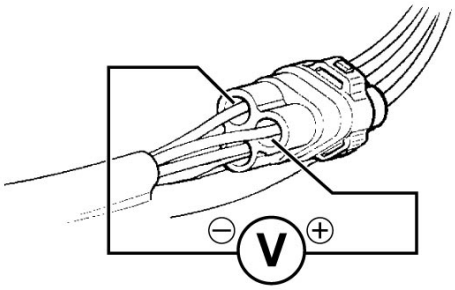

9) If the measured voltage is less than specification, adjust the No. 1 cable adjuster (1) as follows:

a) Set the EXCVA to the adjustment position. Refer to ***EXCVA / EXCV Cable Removal and Installation***.

NOTICE:
Adjusting the No. 1 cable with the EXCV fully closed can damage the EXCVA. Be sure to adjust the No. 1 cable with the EXCV set in the adjustment position.

b) Turn the No. 1 cable adjuster (1) in or out to set the voltage within the specified value.

NOTE:
If C46 code is indicated after adjusting the voltage, increase the voltage to 0.9 V.

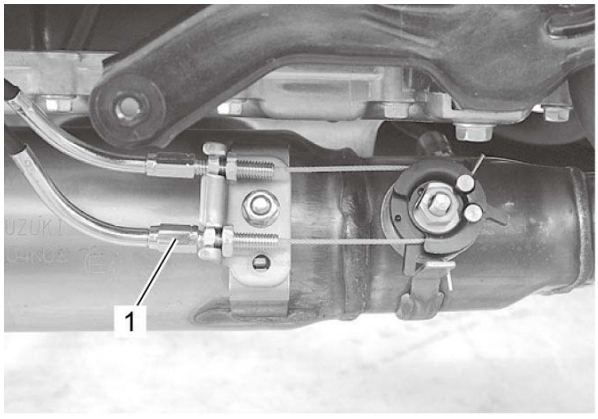

Step 4

1) Click “Fully open”.

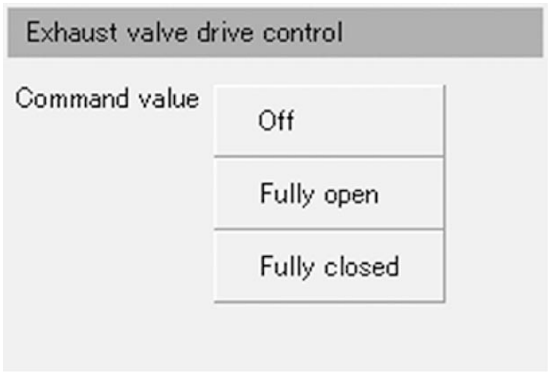

2) Measure the EXCVA position sensor output voltage between the Y wire and W wire at EXCV fully opened position.

EXCVA position sensor output voltage

Opened [Standard]: 3.60 – 4.55 V

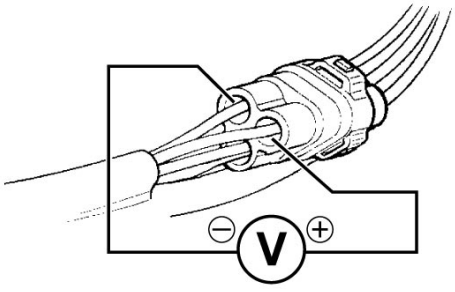

3) If the measured voltage is more than specification, adjust the No. 2 cable adjuster (1) as follows:

a) Set the EXCVA to the adjustment position. Refer to ***EXCVA / EXCV Cable Removal and Installation***.

NOTICE:
Adjusting the No. 2 cable with the EXCV fully opened can damage the EXCVA. Be sure to adjust the No. 2 cable with the EXCV set in adjustment position.

b) Turn the No. 2 cable adjuster (1) in or out to set the output voltage within the specified value.

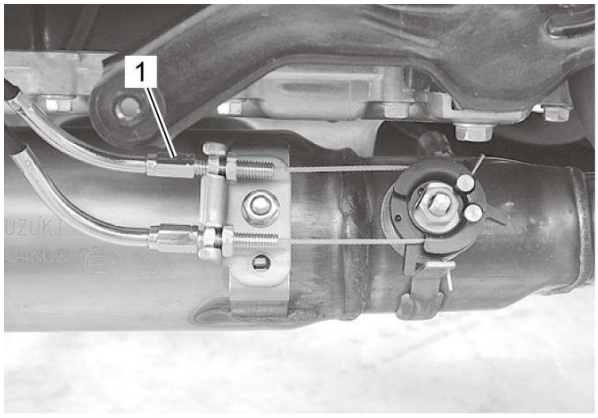

4) After adjusting the EXCV cables, perform Step 2 to confirm DTC “C46” is not indicated.

5) Install the removed parts.

Repair (EXCV pulley does not rotate when turning the ignition switch ON, during EXCVA adjustment)

1) Turn the ignition switch OFF.

2) Disconnect the EXCVA coupler and EXCV cables from the EXCVA pulley. ☞

3) Apply 12 V to the EXCVA lead wire between the Br wire and R wire to rotate the motor so that the line (1) or pulley comes to the adjacent position as shown.

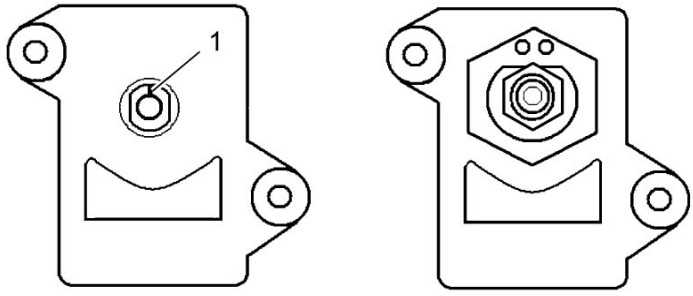

4) Connect the EXCVA coupler.

5) Check the EXCVA to the adjustment position. Refer to ***EXCVA / EXCV Cable Removal and Installation***.

6) Turn the ignition switch OFF.

7) Connect the EXCV cables and install the EXCVA. Refer to ***EXCVA / EXCV Cable Removal and Installation***.

8) Inspect the EXCVA position sensor voltage. Refer to ***EXCVA Adjustment***.

EXCVA Inspection

EXCVA Position Sensor Resistance

1) Set the EXCVA to adjustment position. Refer to ***EXCVA / EXCV Cable Removal and Installation***.

2) Turn the ignition switch OFF and disconnect the EXCVA position sensor coupler.

3) Measure the resistance between the Y wire and W wire.

EXCVA position sensor resistance

At adjustment position [Standard]: Approx. 3100 Ω

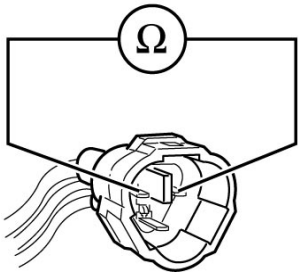

EXCVA Position Sensor Output Voltage

Refer to ***EXCVA Adjustment***.

EXCVA Motor

1) Turn the ignition switch OFF.

2) Disconnect the EXCVA motor coupler (1). Refer to ***EXCVA / EXCV Cable Removal and Installation***.

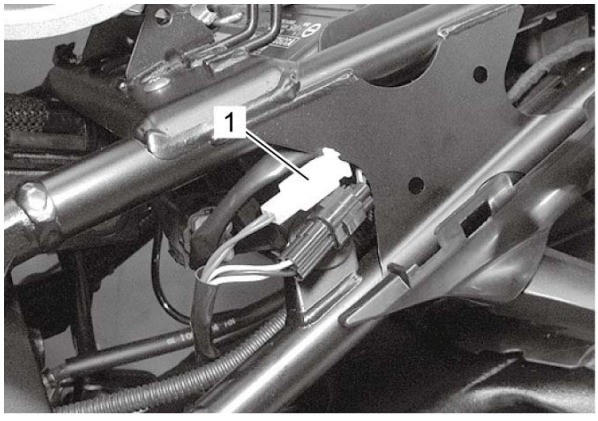

3) Apply 12 V to the terminals and check the operation of EXCVA.

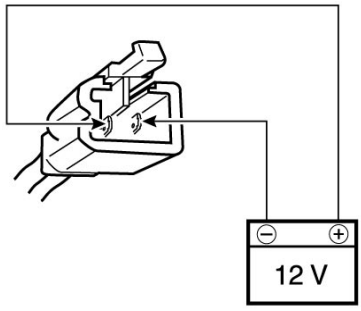

4) Then, switch the wires supplied 12 V and check the operation of EXCVA. (Check the operation of EXCVA in both way.)

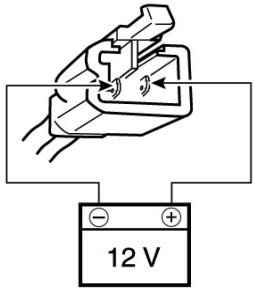

5) If the EXCVA pulley is not rotate, replace the EXCVA with a new one.

EXCVA Pulley Inspection

Refer to ***EXCVA / EXCV Cable Removal and Installation***.

- Visually inspect the EXCVA pulley for wear and damage. If there is anything unusual, replace the pulley with a new one.



Exhaust Control System Construction

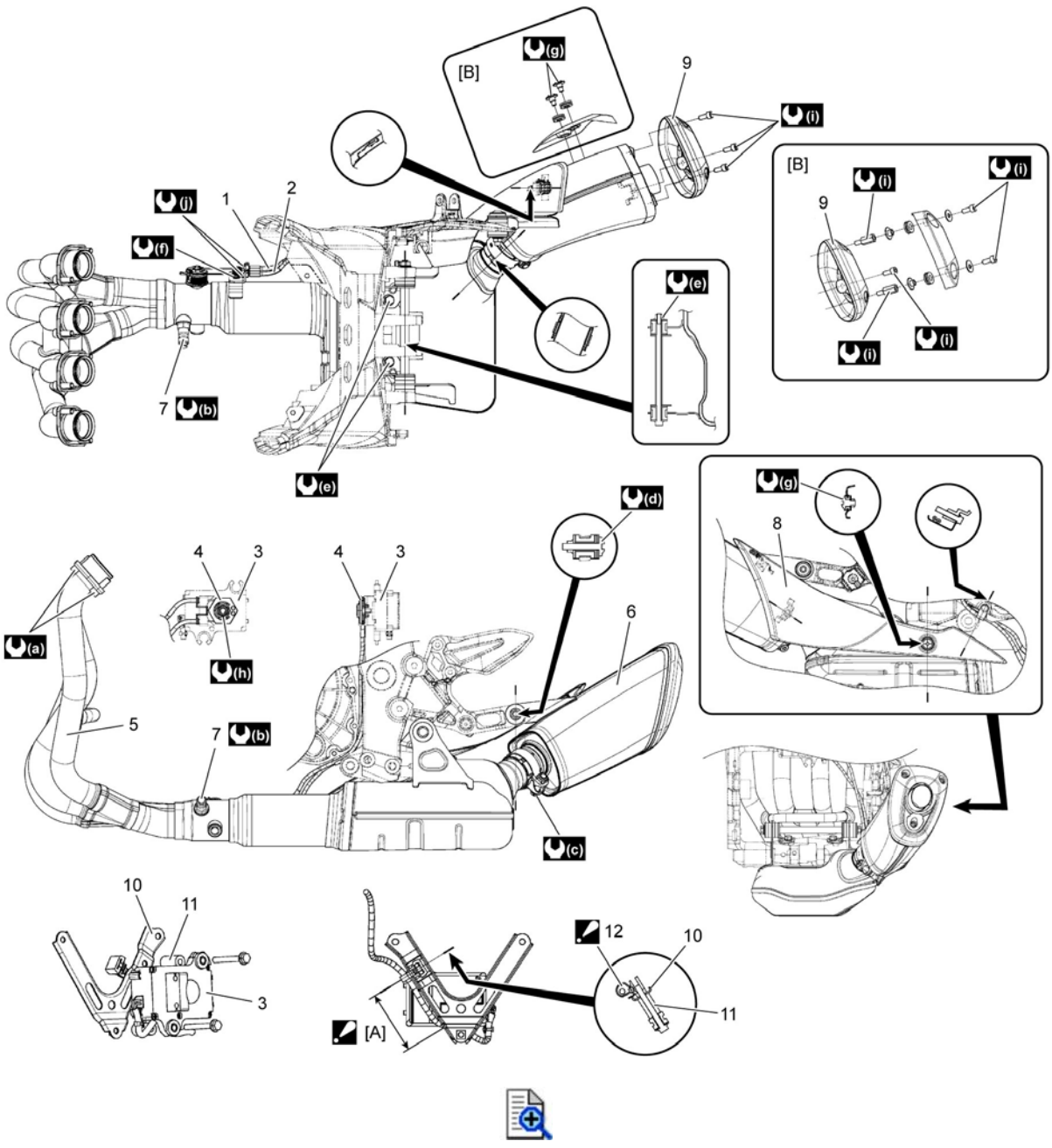

[A]:	Do not slacken the lead wire in this area.	7.	HO2 sensor	(c):	18 N·m (1.8 kgf-m, 13.5 lbf-ft)
[B]:	If equipped	8.	Muffler front cover	(d):	31 N·m (3.2 kgf-m, 23.0 lbf-ft)
1.	EXCV cable No. 1	9.	Muffler rear cover	(e):	26 N·m (2.7 kgf-m, 19.5 lbf-ft)
2.	EXCV cable No. 2	10.	EXCVA bracket	(f):	11 N·m (1.1 kgf-m, 8.5 lbf-ft)

3.	EXCVA	11.	Spacer	(g):	5.5 N·m (0.56 kgf-m, 4.05 lbf-ft)
4.	EXCVA pulley	 12.	Clamp : Cut the tip of clamp.	(h):	5 N·m (0.51 kgf-m, 3.70 lbf-ft)
5.	Exhaust pipe	(a):	23 N·m (2.3 kgf-m, 17.0 lbf-ft)	(i):	10 N·m (1.0 kgf-m, 7.5 lbf-ft)
6.	Muffler	(b):	25 N·m (2.5 kgf-m, 18.5 lbf-ft)	(j):	4.5 N·m (0.46 kgf-m, 3.35 lbf-ft)

Exhaust Control System Description

The EXCS consists of the EXCV, EXCVA and EXCV cables.
EXCV is installed in the exhaust pipe. EXCVA is mounted backward of the frame. The EXCV is operated by the EXCVA via the cables. This system is designed to improve the engine torque at low engine speed.

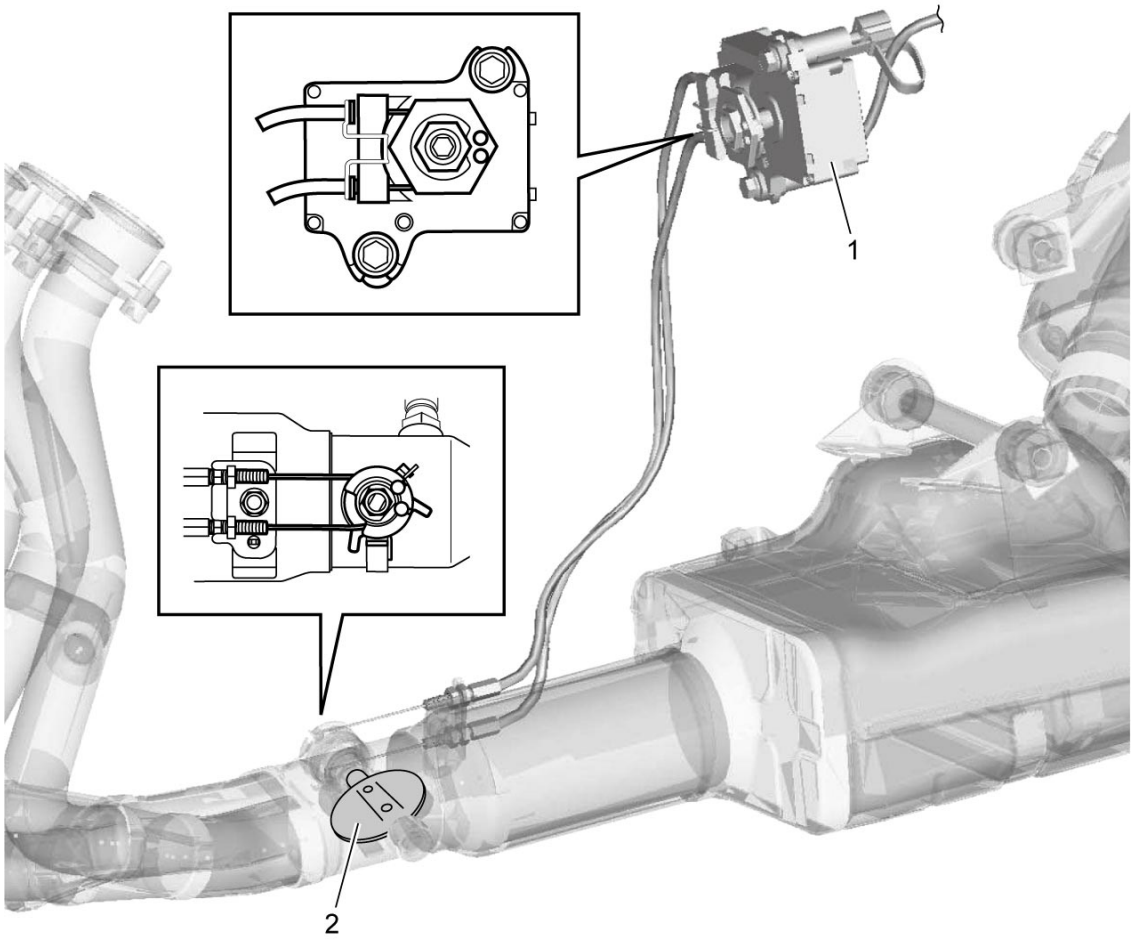

1.	Exhaust control valve actuator (EXCVA)	2.	Exhaust control valve (EXCV)

Exhaust Control System Operation

The EXCS is operated by the signal supplied from the ECM. The open/close operation of the EXCV is performed by the EXCVA which is controlled by the ECM by changing the current direction of the actuator motor. The position sensor (incorporated in the EXCVA) detects the EXCVA movement by measuring the voltage and then the ECM determines the EXCV opening angle based on the engine speed and gear positions. Every time the ignition switch is turned ON, the EXCVA automatically drives the EXCV and detects full close/open position voltages and sets the EXCV to middle position.

FULL CLOSE

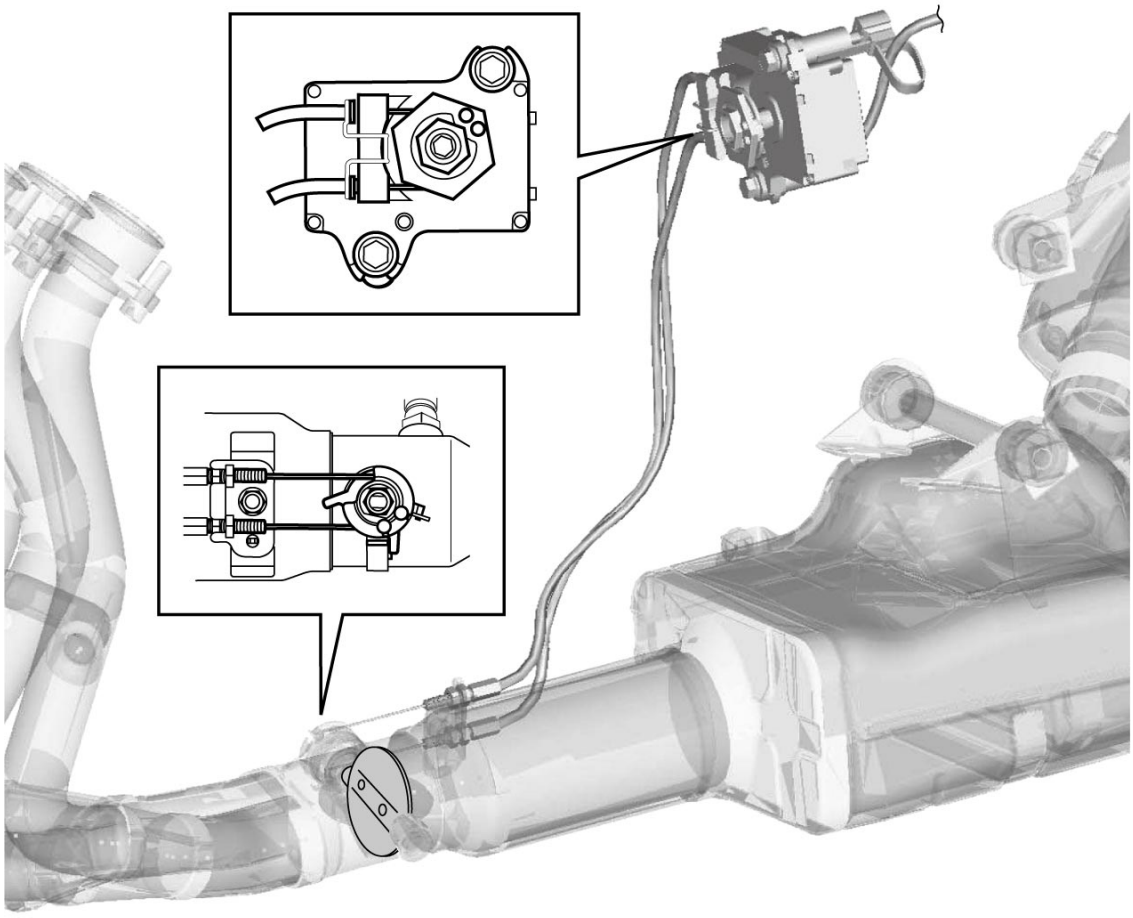

FULL OPEN

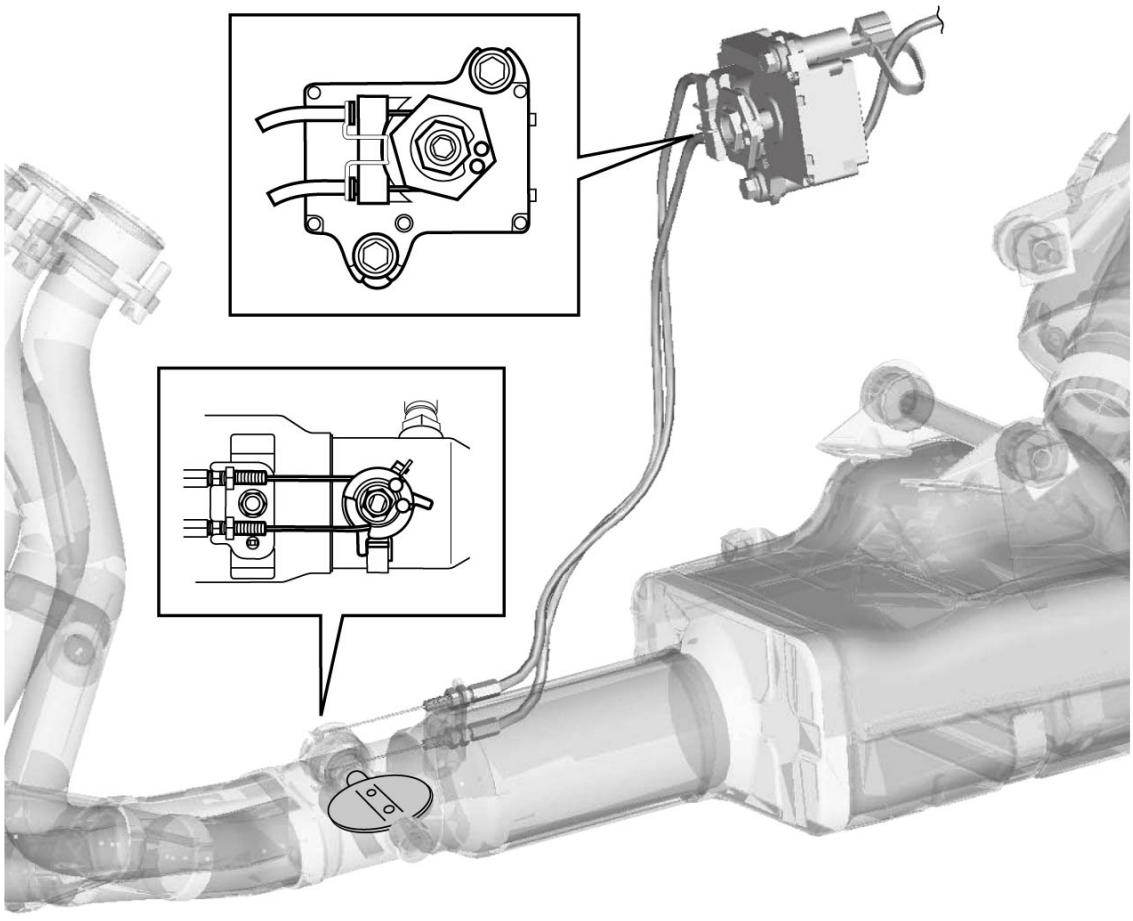

Exhaust Control Valve Inspection

1) Remove the following parts.
- Right under cowling (GSX-S1000/A): ☞
- Right side cowling assembly (GSX-S1000F/FA): ☞

2) Check the EXCVA (1) for its smooth movement when the ignition switch is turned on. If the EXCVA does not move smoothly, check EXCVA electrical circuit. Refer to ***EXCVA Inspection***.

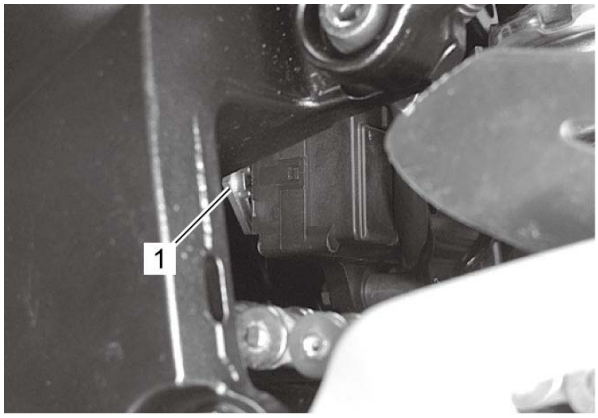

3) Turn the ignition switch OFF.

4) Check the lock-nuts (1) for tightness. If the lock-nuts (1) are loose, tighten them after adjusting the cable length. Refer to ***EXCVA / EXCV Cable Removal and Installation***.

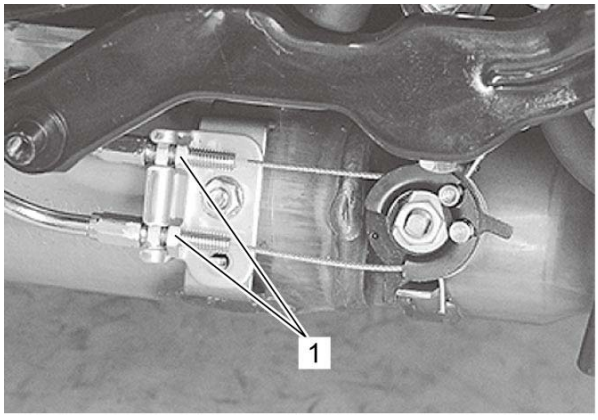

5) Check that the EXCV pulley (1) rotates to full open/close stopper positions, when turning the ignition switch ON.

6) Check that the voltage of EXCVA position sensor is within specification.
If not, perform EXCVA adjustment. Refer to ***EXCVA Adjustment***.

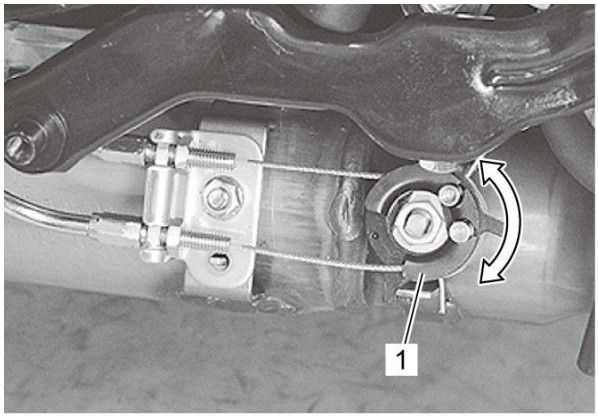

7) Turn the ignition switch OFF.

Exhaust Pipe / Muffler Installation

Exhaust Pipe

1) Install the HO2 sensor. ☞

2) Install the new exhaust pipe gaskets (1).

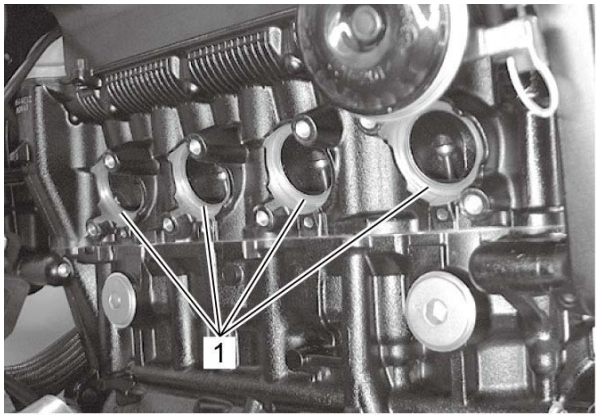

3) Temporarily the exhaust pipe (1), washer (2) and exhaust support bolt (3).

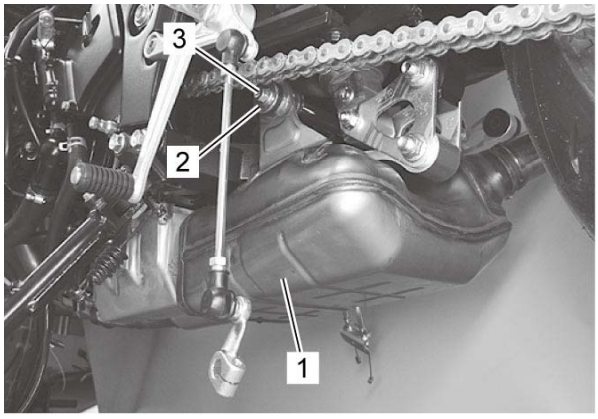

4) Tighten the exhaust pipe bolts (1) to the specified torque.

Tightening torque

Exhaust pipe bolt (a): 23 N·m (2.3 kgf-m, 17.0 lbf-ft)

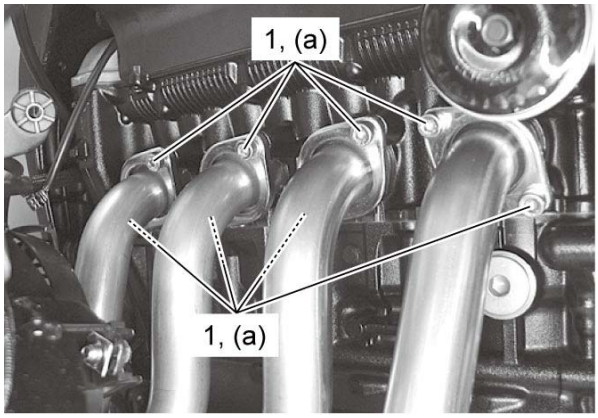

5) Install the washer (1) and tighten the exhaust support nut (2) to the specified torque.

Tightening torque

Exhaust support nut (a): 26 N·m (2.7 kgf-m, 19.5 lbf-ft)

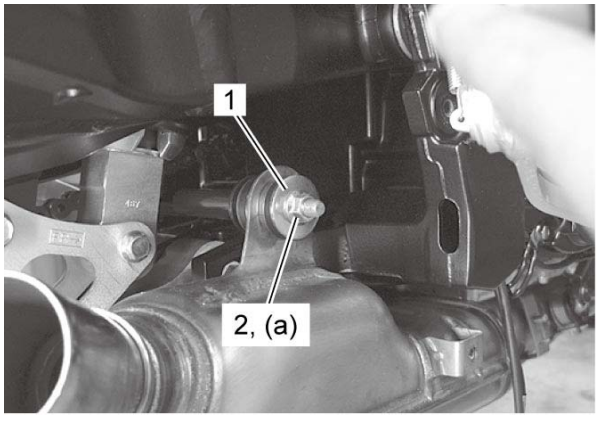

6) Install the front footrest. ☞

7) Install the gearshift link arm. ☞

8) Install the EXCV cables (1) and bracket (2). Refer to ***EXCVA / EXCV Cable Removal and Installation***.

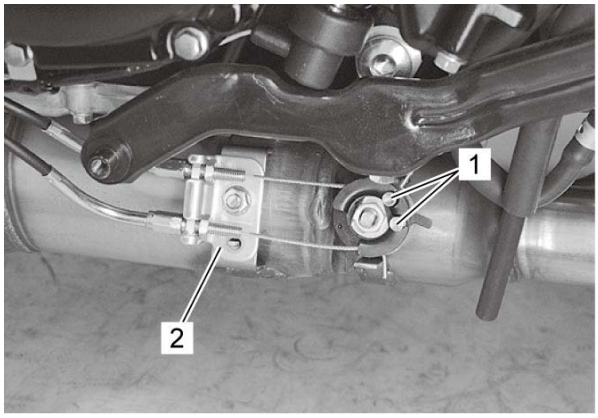

9) Install the radiator. ☞

10) Connect the HO2 sensor coupler (1).

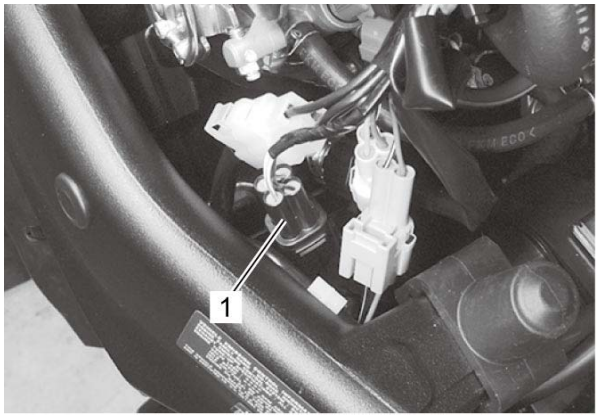

11) Install the fuel tank. ☞

12) Install the under cowling. ☞

Muffler

1) Install the muffler rear cover (1) and tighten the muffler rear cover bolts (2) to the specified torque.

Tightening torque

Muffler rear cover (a): 10 N·m (1.0 kgf-m, 7.5 lbf-ft)

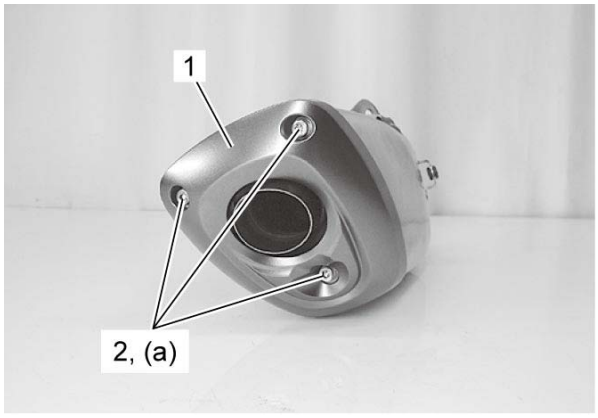

2) Put the edge (2) of a new muffler connector (1) to the exhaust pipe stopper (3).

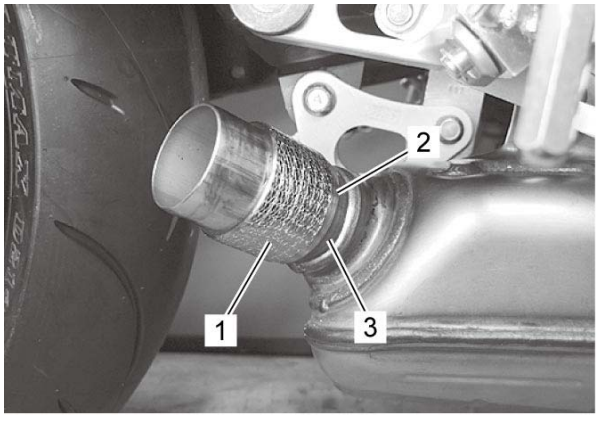

3) Install the muffler (1) and tighten the muffler support bolt (2) to the specified torque.

Tightening torque

Muffler support bolt (a): 31 N·m (3.2 kgf-m, 23.0 lbf-ft)

4) Apply nickel based anti seize to the thread part of muffler connector bolt (3) and tighten it to the specified torque.

Tightening torque

Muffler connector bolt (b): 18 N·m (1.8 kgf-m, 13.5 lbf-ft)

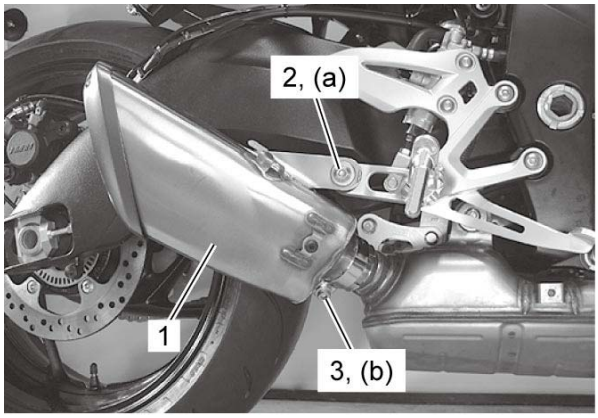

5) Slide the muffler cover retainer (1) to the hook (2) on the muffler and tighten the muffler front cover bolt (3) to the specified torque.

Tightening torque

Muffler front cover (a): 5.5 N·m (0.56 kgf-m, 4.05 lbf-ft)

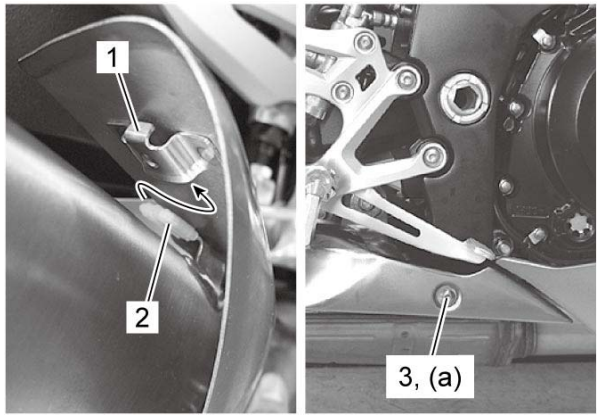

Exhaust Pipe / Muffler Removal

Reference: Exhaust System Components
Reference: Exhaust Control System Construction

Muffler

1) Remove the muffler front cover (1).

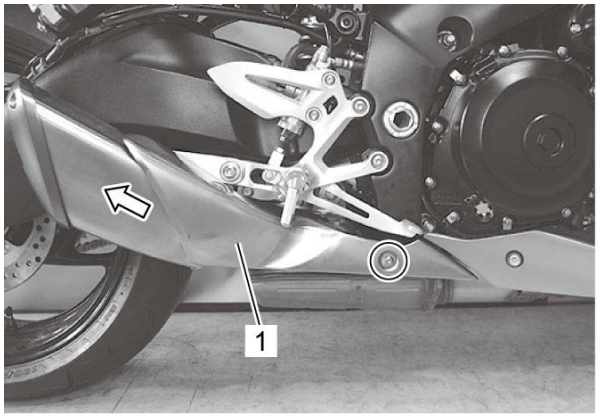

2) Loosen the muffler connector bolt (1).
3) Remove the support bolt and nut (2) and muffler (3).

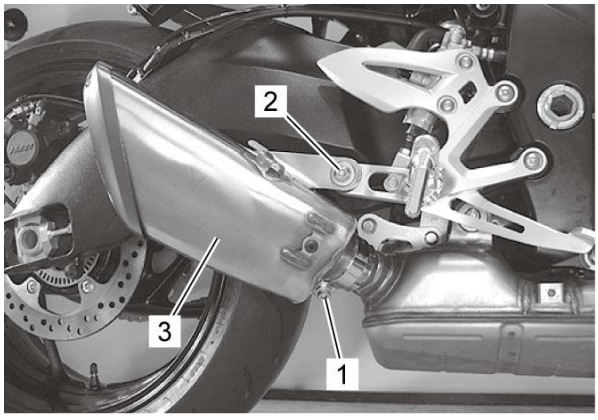

4) Remove the muffler connector (1).

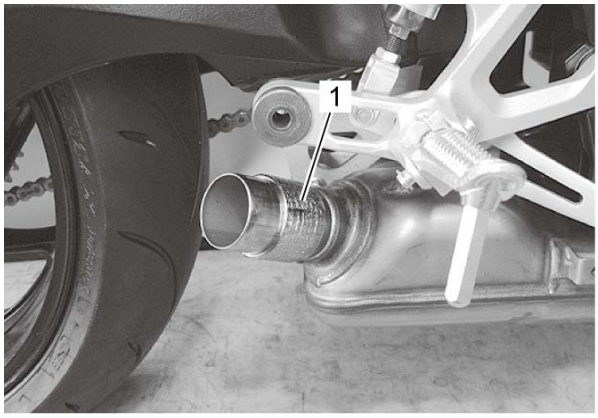

5) Remove the muffler rear cover (1).



Exhaust Pipe

1) Remove the under cowling (GSX-S1000/A). ☞

2) Lift and support the fuel tank. ☞

3) Move the radiator. ☞

4) Disconnect the HO2 sensor lead wire coupler (1).

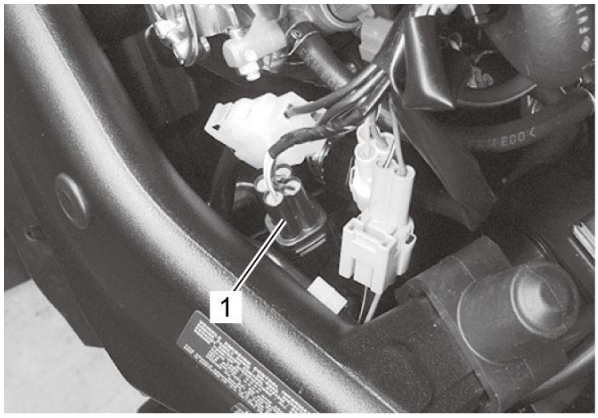

5) Remove the EXCV cable bracket (1) with EXCV cables (2). Refer to ***EXCVA / EXCV Cable Removal and Installation***.

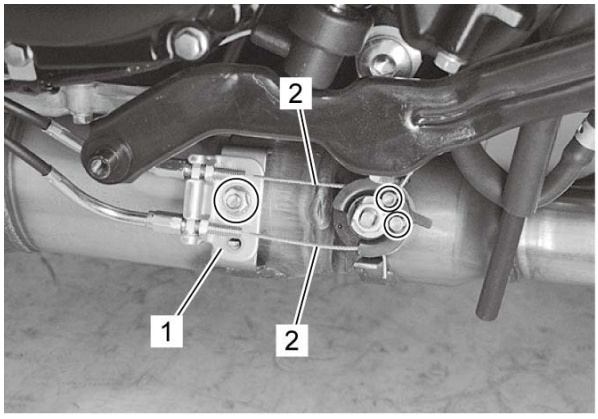

6) Remove the exhaust pipe bolts (1).

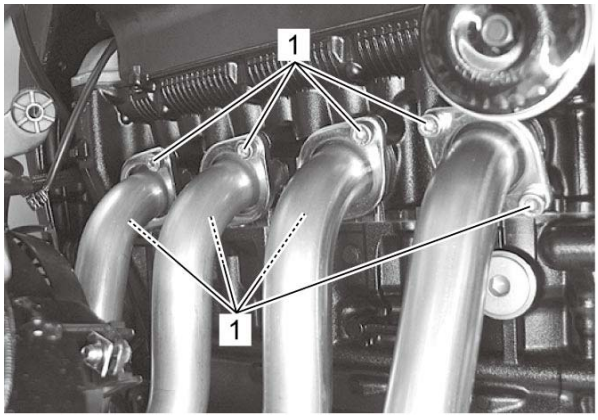

7) Remove the front footrest bolts (1).

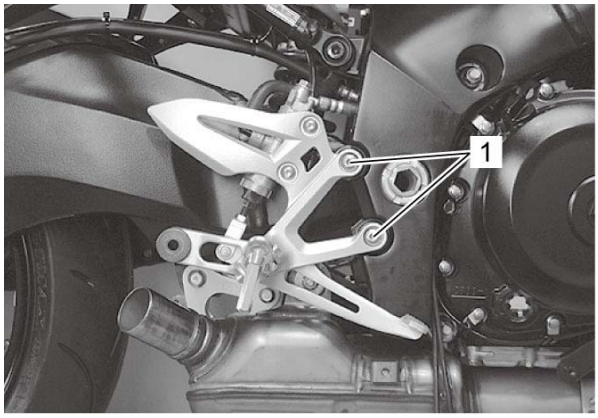

8) Remove the gearshift link arm. ☞

9) Remove the exhaust support nut (1) and washer (2).

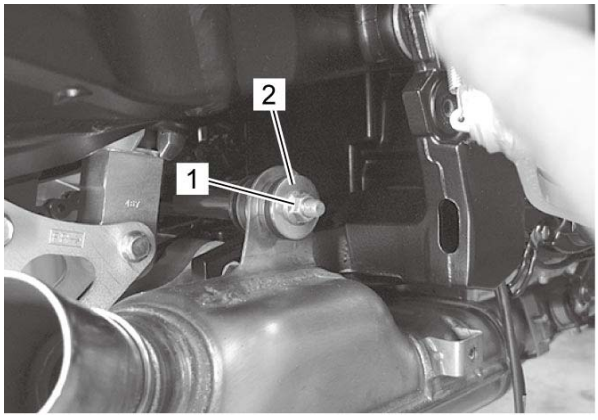

10) Remove the exhaust support bolt (1) and washer (2).

11) Remove the exhaust pipe (3).

NOTE:
Support the exhaust pipe assembly to prevent it from falling.

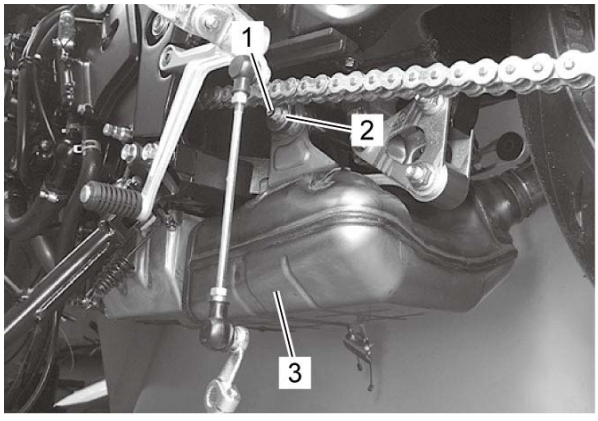

12) Remove the exhaust pipe gaskets (1).

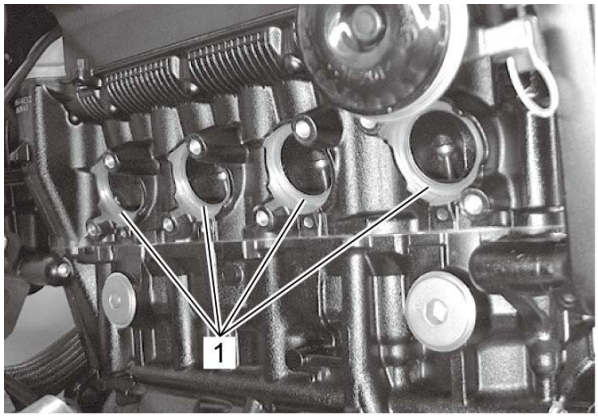

13) Remove the HO2 sensor (1).

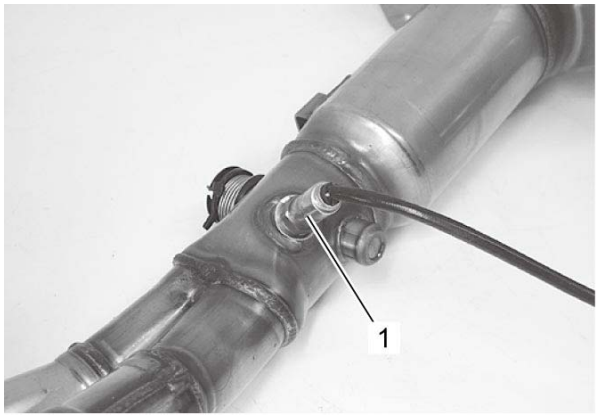

Exhaust System Inspection



Inspect the exhaust pipe connection and muffler connection for exhaust gas leakage and mounting condition. If any defect is found, replace the exhaust pipe assembly or muffler with a new one.
Check the exhaust pipe bolts, muffler connector bolt, exhaust support nut and muffler support bolt are tightened to their specified torque. Refer to ***Exhaust Control System Construction*** and ***Exhaust System Components***.

Tightening Torque Specifications

Fastening part	Tightening torque			Note
	N·m	kgf-m	lbf-ft	
EXCVA pulley bolt	5	0.51	3.70	☞
EXCV cable lock-nut	4.5	0.46	3.35	☞ ☞
EXCV cable bracket mounting nut	11	1.1	8.5	☞
Exhaust pipe bolt	23	2.3	17.0	☞
Exhaust support nut	26	2.7	19.5	☞
Muffler rear cover	10	1.0	7.5	☞
Muffler support bolt	31	3.2	23.0	☞
Muffler connector bolt	18	1.8	13.5	☞
Muffler front cover	5.5	0.56	4.05	☞

Reference:
For the tightening torques of fasteners not specified in this page, refer to:
Exhaust Control System Construction
Fasteners Information

Ignition System Symptom Diagnosis

Condition	Possible Cause	Action
Spark plug not sparking	Damaged spark plugs.	*Replace.* ☞
	Fouled spark plugs.	*Replace.* ☞
	Wet spark plugs.	*Dry or replace.* ☞
	Defective ignition coils.	*Replace.* ☞
	Defective CKP sensor.	*Replace.* ☞
	Defective ECM.	*Replace.* ☞
	Open-circuited wiring connections.	*Repair or replace.* ☞
Engine stalls easily (No spark)	Fouled spark plugs.	*Replace.* ☞
	Defective CKP sensor.	*Replace.* ☞
	Defective ECM.	*Replace.* ☞
Spark plug is wet or quickly becomes fouled with carbon	Excessively rich air/fuel mixture.	*Inspect FI system.*
	Excessively high idling speed.	*Inspect FI system.*
	Incorrect gasoline.	*Change.*
	Dirty air cleaner element.	*Replace.* ☞
	Incorrect spark plugs (Cold type).	*Change to standard spark plug.* ☞
Spark plug quickly becomes fouled with oil or carbon	Worn piston rings.	*Replace.* ☞
	Worn pistons.	*Replace.* ☞ ☞
	Worn cylinders.	*Replace.* ☞ ☞
	Excessive valve-stem to valve-guide clearance.	*Replace.* ☞
	Worn valve stem oil seals.	*Replace.* ☞
Spark plug electrodes overheat or burn	Incorrect spark plugs (Hot type).	*Change to standard spark plug.* ☞
	Overheated engine.	*Tune-up.*
	Loose spark plugs.	*Tighten.* ☞
	Excessively lean air/fuel mixture.	*Inspect FI system.*

No Spark or Poor Spark

Troubleshooting

NOTE:
Check that the transmission is in neutral and the engine stop switch is in the "RUN" position. Check that the fuse is not blown and the battery is fully-charged before diagnosing.

Step	Action	Yes	No
1	1) Check the ignition system couplers for poor connections. ***Is there connection in the ignition system couplers?***	Go to Step 2.	Poor connection of couplers.
2	1) Turn the ignition switch ON. 2) Measure the battery voltage between B (For E.U. and Australia) or W/R (Except for E.U. and Australia) wire (+) and B/W wire (–) of ECM. Refer to ***Ignition System Diagram***. ***Is the voltage OK?***	Go to Step 3.	• Faulty ignition switch. • Faulty side-stand relay. • Faulty engine stop switch. • Broken wire harness or poor connection of related circuit couplers.
3	Measure the ignition coil primary peak voltage. Refer to ***Ignition Coil Inspection***. ***Is the peak voltage OK?***	Go to Step 4.	Go to Step 5.
4	Inspect the spark plug(-s). ☞ ***Is the spark plug(-s) OK?***	Go to Step 5.	Faulty spark plug(-s).
5	Inspect the ignition coil(-s). ☞ ***Is the ignition coil(-s) OK?***	Go to Step 6.	Faulty ignition coil(-s).
6	Measure the CKP sensor peak voltage and its resistance. Refer to ***CKP Sensor Inspection***. ***Are the peak voltage and resistance OK?***	• Faulty ECM. • Open or short circuit in wire harness. • Poor connection of ignition couplers.	• Faulty CKP sensor. • Metal particles or foreign material being stuck on the CKP sensor and rotor tip.

Ignition System Diagram

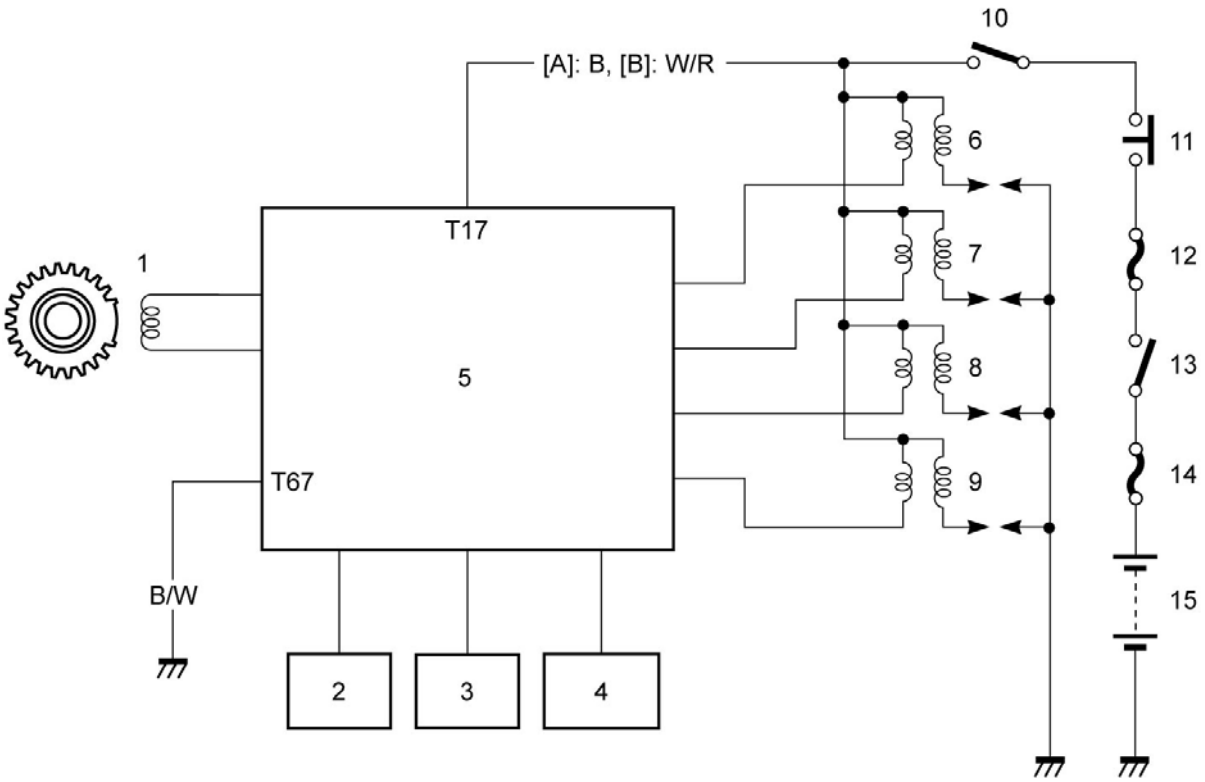

[A]:	For E.U. and Australia	5.	ECM	11.	Side-stand relay
[B]:	Except for E.U. and Australia	6.	Ignition coil #1	12.	Ignition fuse
1.	CKP sensor	7.	Ignition coil #2	13.	Ignition switch
2.	TP sensor	8.	Ignition coil #3	14.	Main fuse
3.	ECT sensor	9.	Ignition coil #4	15.	Battery
4.	GP switch	10.	Engine stop switch		

Engine Stop Switch Inspection

1) Turn the ignition switch OFF.
2) Remove the following parts.
   - Headlight assembly (GSX-S1000/A): ☞
   - Air cleaner box (GSX-S1000F/FA): ☞
3) Disconnect the right handle switch coupler (1).

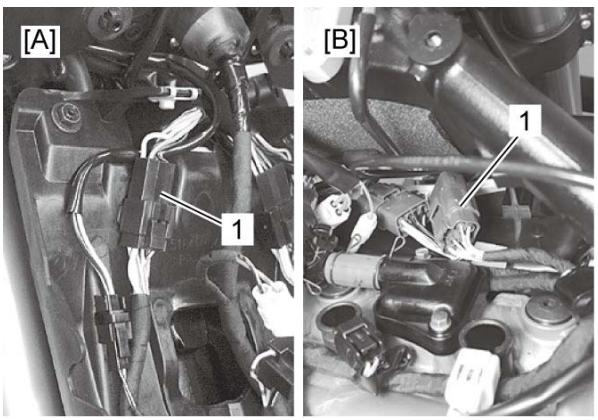

[A]:	GSX-S1000/A	[B]:	GSX-S1000F/FA

4) Inspect the engine stop switch for continuity with a circuit tester. If any abnormality is found, replace the right handle switch with a new one. ☞

Color / Position	O/B	O/W
OFF		
RUN	○——	——○

5) After finishing the engine stop switch inspection, install the removed parts.

Ignition Coil Inspection

Refer to ***Ignition Coil Removal and Installation***.

Ignition Coil Primary Peak Voltage

1) Connect new spark plug (1) to each ignition coil.

2) Connect all the ignition coil lead wire couplers to the ignition coils respectively, and ground them on the cylinder head.

NOTE:
Be sure that all the spark plugs are connected properly and the battery used is in fully-charged condition.

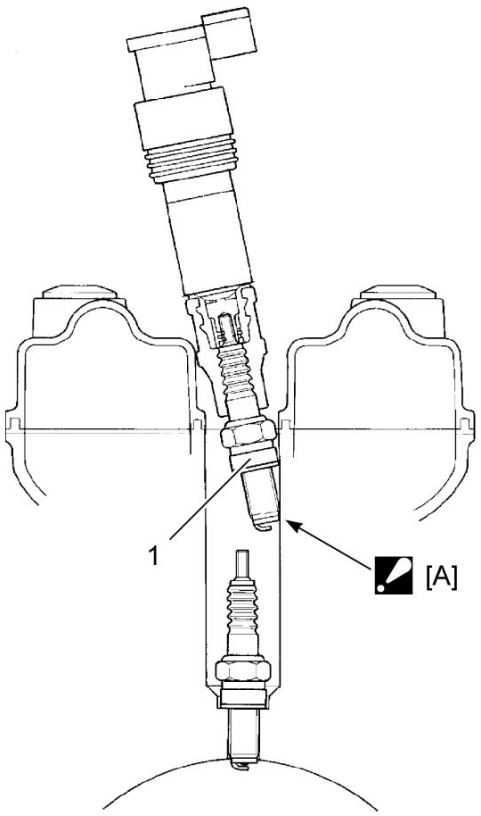

[A]:	Contact the spark plug to the cylinder head.

3) Connect the immobilizer antenna coupler (1) and install the fuel tank lower cover (2). (If equipped)

4) Connect the ECM couplers (3).

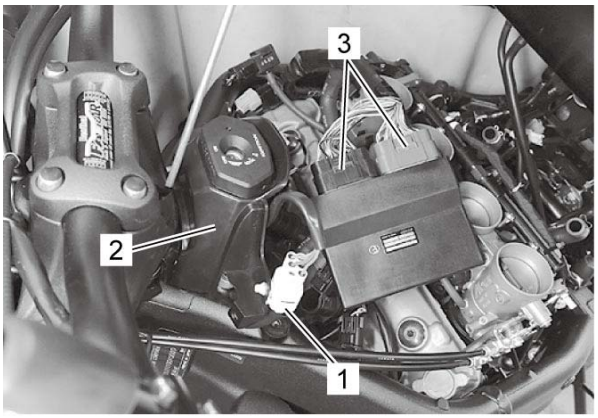

5) Insert the needle point probe to the lead wire coupler.

6) Connect the multi circuit tester with the peak volt adaptor (1) as follows.

Special Tool

(A): 09900–25008
(B): 09900–25009

Ignition coil – circuit tester connection

	(+) Probe (4)	(–) Probe (5)
Ignition coil #1 (2)	W/Bl wire terminal	Ground
Ignition coil #2 (2)	B wire terminal	Ground
Ignition coil #3 (2)	Y wire terminal	Ground
Ignition coil #4 (2)	G wire terminal	Ground

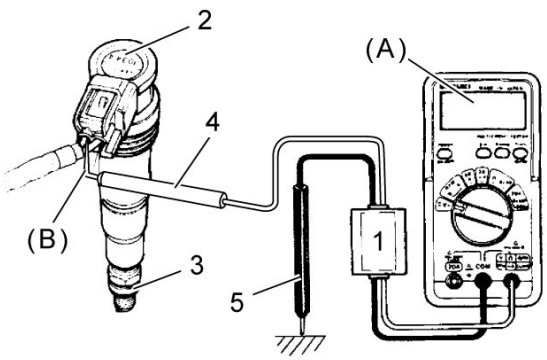

3.	New spark plug

7) Measure the ignition coil primary peak voltage in the following procedures:

⚠WARNING:
Do not touch the tester probes and spark plugs to prevent an electric shock while testing.

a) Shift the transmission into neutral and turn the ignition switch ON.

b) Press the starter switch and allow the engine to crank for a few seconds, and then measure the ignition coil primary peak voltage.

8) Repeat the b) procedure several times and measure the highest peak voltage.
If the voltage is lower than standard range, replace the ignition coil. ☞

Ignition coil primary peak voltage

[Standard]: 80 V or more

Ignition Coil Resistance

1) Measure the ignition coil for resistance in both primary and secondary coils. If the resistance is not within the standard range, replace the ignition coil with a new one.

Special Tool

(A): 09900–25008

Ignition coil resistance

Primary
10 – 30 °C (50 – 86 °F) [Standard]: 1.1 – 1.9 Ω
Secondary [Standard]: 6400 – 9600 Ω

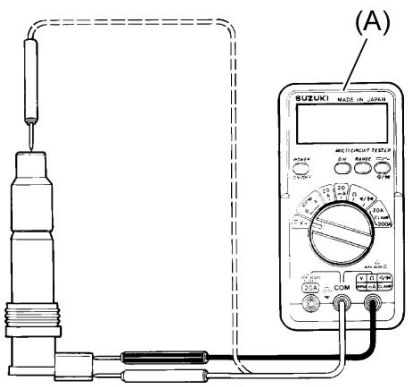

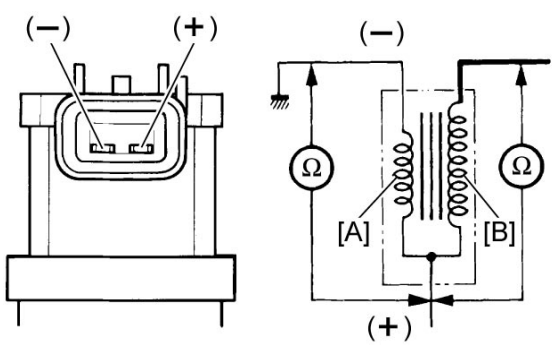

[A]:	Primary coil	[B]:	Secondary coil

Ignition Coil Removal and Installation

Removal

⚠WARNING:
The hot engine can burn you.
Wait until the engine is cool enough to touch.

1) Turn the ignition switch OFF.

2) Remove the air cleaner box. ☞

3) Disconnect the ignition coil lead wire couplers (1).

NOTICE:
Disconnect the lead wire coupler before removing the ignition coil to avoid lead wire coupler damage.

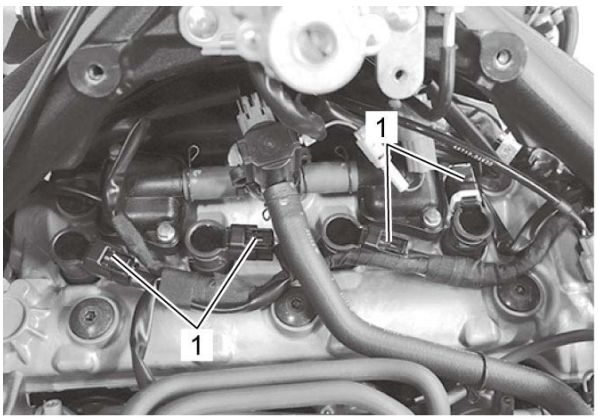

4) Remove the ignition coils (1).

NOTICE:
- **Do not pry up the ignition coil with a screw driver or a bar to avoid its damage.**
- **Be careful not to drop the ignition coil to prevent short / open circuit.**

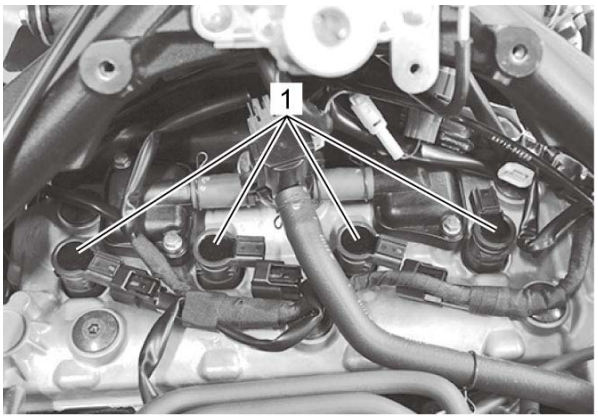

Installation

Reference: Ignition Coil Inspection

Install the ignition coil in the reverse order of removal. Pay attention to the following point:

- Position the ignition coils and install them. Refer to ***Wiring Harness Routing Diagram***.

NOTICE:
Do not hit the ignition coil with a plastic hammer when installing it.

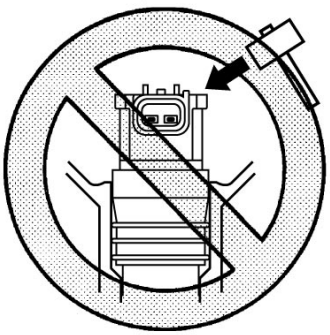

Ignition Switch Cover Removal and Installation (Without Immobilizer System)

Refer to ***Fuel Tank Upper Cover / Fuel Tank Lower Cover Removal and Installation***.

Removal

Remove the ignition switch cover (1).

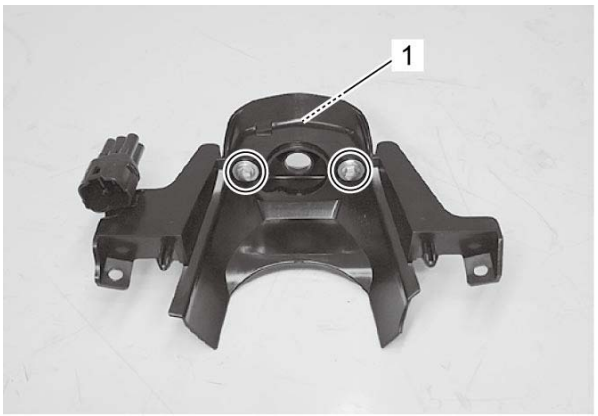

Installation

Install the ignition switch cover in the reverse order of removal.

Ignition Switch Inspection

1) Turn the ignition switch OFF.

2) Remove the air cleaner box. ☞

3) Disconnect the ignition switch lead wire coupler(-s) (1).

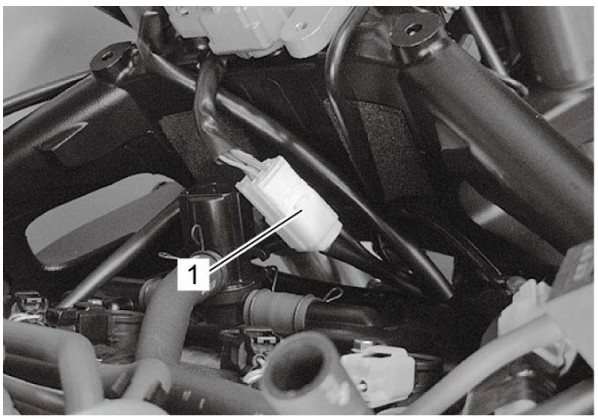

4) Inspect the ignition switch for continuity with a circuit tester. If any abnormality is found, replace the ignition switch with a new one.

With immobilizer system

Position \ Color	R	O	Gr	Br
ON	○——	——○	○——	——○
OFF				
LOCK				
P	○——	——	——	——○

Without immobilizer system

Position \ Color	R	O	Gr	Br	O/Y
ON	○——	——○	○——	——○	
OFF					
LOCK					
P	○——	——	——	——○	

5) After finishing the ignition switch inspection, reinstall the removed parts.

Ignition Switch Removal and Installation

Refer to ***Air Cleaner Box Removal and Installation***.

Removal

1) Disconnect the ignition switch lead wire coupler(-s) (1).
2) Remove the ignition switch (2).

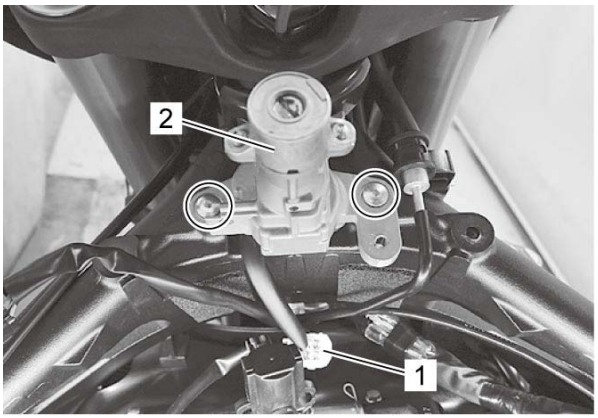

Installation

Install the ignition switch in the reverse order of removal. Pay attention to the following point:

- Tighten new ignition switch mounting bolts (1) with the special tool until head (2) of each bolt (1) is broken off.

Special Tool
09930–11940
09940–63110

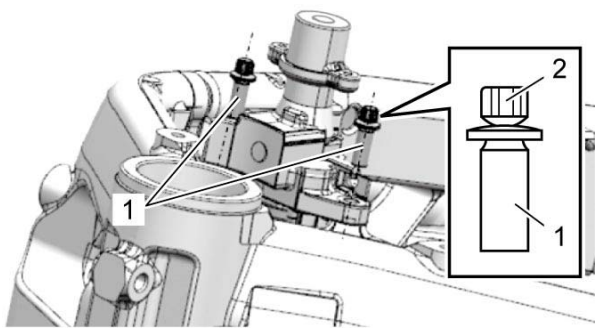

Immobilizer Antenna Removal and Installation (With Immobilizer System)

Refer to ***Fuel Tank Upper Cover / Fuel Tank Lower Cover Removal and Installation***.

Removal

Remove the coupler (1) and immobilizer antenna (2).

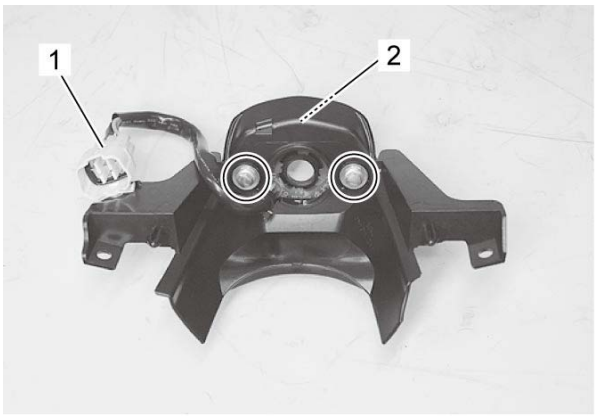

Installation

Install the immobilizer antenna in the reverse order of removal.

Immobilizer Description (If Equipped)

The immobilizer verifies that the key ID (1) agrees with ECM ID by means of radio communication through the immobilizer antenna (2). When the ID agreement is verified, the system makes the engine ready to start.

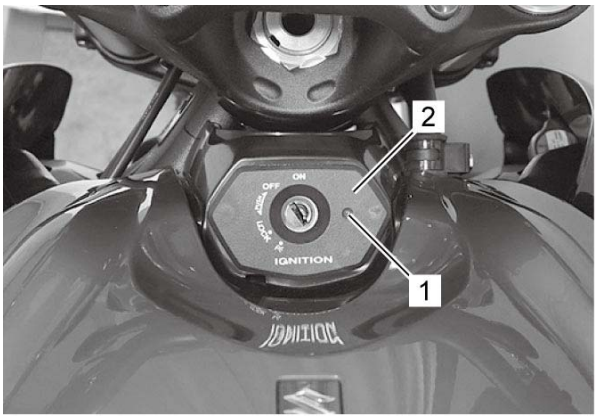

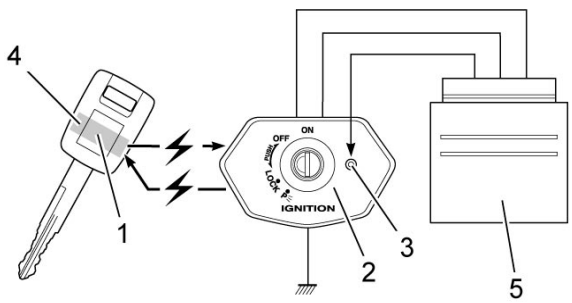

3.	Indicator light	5.	ECM
4.	Transponder		

Operation

When the ignition switch (1) is turned ON with the engine stop switch (2) and side-stand relay (3) in ON, the immobilizer antenna (4) and ECM (5) are powered ON.
The ECM transmits a signal to the transponder (6) through the immobilizer antenna (4) in order to make comparison between the key ID and ECM ID.
With the signal received, the transponder transmits the key ID signal to ECM (5) so that ECM (5) can make comparison with its own ID, and if it matches, the engine is made ready to start.

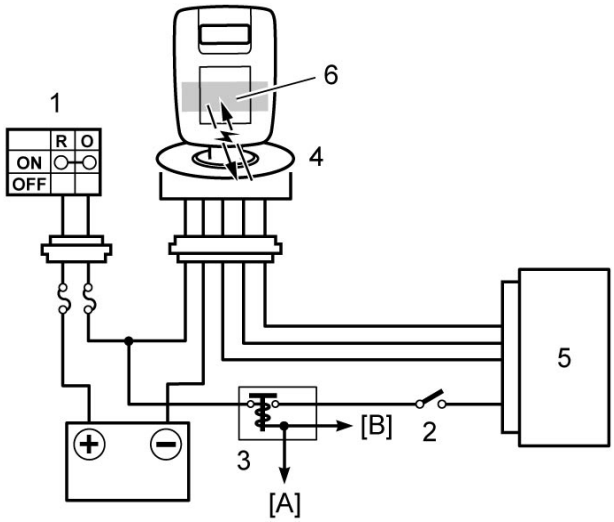

[A]:	To side-stand switch	[B]:	To GP switch

Also, when the ignition switch is turned ON, the indicator light (1) flashes as many as the number of IDs registered in ECM. Thereafter, if the IDs are in agreement, the indicator light turns on for two seconds to notify of completion in successful communication.
If the indicator light (LED) (1) flashes fast, it notifies of communication error or disagreement of ID.

NOTE:

- **If the indicator light (1) flashes fast, turn the ignition switch OFF then ON to make judgment again as there is possible misjudgment due to environmental radio interference.**
- **When the battery performance is lowered in winter (low temperature), the system may at times makes a re-judgment at the time of beginning the starter motor operation. In this case, the indicator light (1) operation starts immediately after the starter operation.**

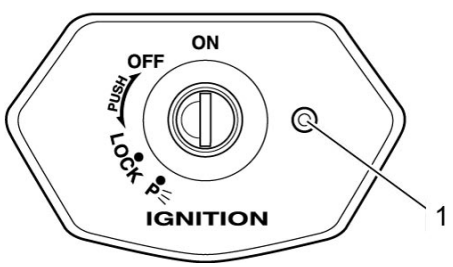

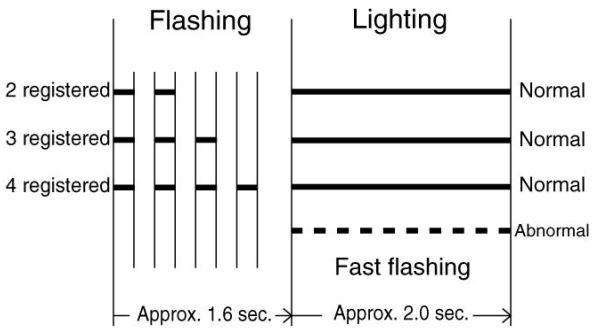
Flashing
Lighting
2 registered
3 registered
4 registered
Normal
Normal
Normal
Abnormal
Fast flashing
Approx. 1.6 sec.
Approx. 2.0 sec.

Spark Plug Inspection

Refer to ***Spark Plug Removal and Installation***.

Spark Plug Inspection

Check spark plug for:

- Electrode wear
- Carbon deposits
- Insulator damage
- Spark plug gap “a”

If any abnormality is found, replace it with new plug.

Spark plug

Type [Standard]: NGK CR9EIA-9 / DENSO IU27D
Gap [Standard]: 0.8 – 0.9 mm (0.032 – 0.035 in)

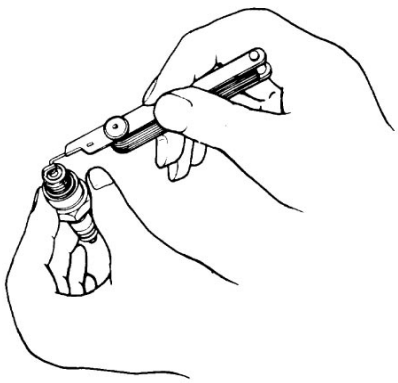

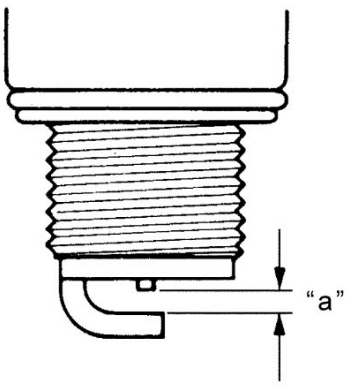

NOTICE:
Confirm the thread size and reach when replacing the plug. If the reach is too short, carbon will be deposited on the screw portion of the plug hole and engine damage may result.

Heat Range

Check spark plug heat range by observing electrode color. If the electrode of the spark plug is wet appearing or dark color, replace the spark plug with hotter type one. If it is white or glazed appearing, replace the spark plug with colder type one.

Heat range

	Hot type (Option)	Standard	Cold type (Option)
NGK	CR8EIA-9	CR9EIA-9	CR10EIA-9
DENSO	IU24D	IU27D	IU31D

Spark Plug Removal and Installation

Refer to ***Ignition Coil Removal and Installation***.

Removal

Remove the spark plugs with a spark plug wrench.

Special Tool

(A): 09930–10121

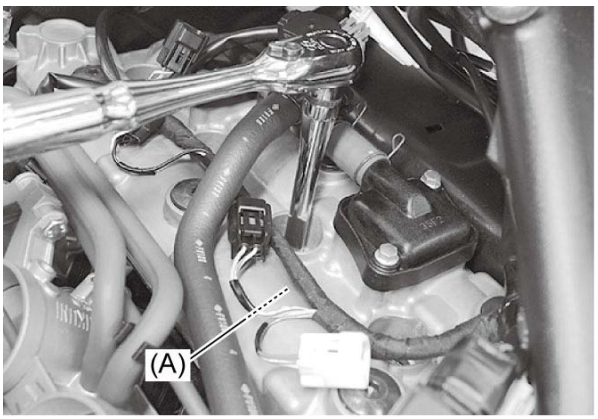

Installation

Reference: Spark Plug Inspection

Screw the spark plugs into the cylinder head with fingers, and then tighten them to the specified torque.

NOTICE:

Do not cross thread or over tighten the spark plug, or such an operation will damage the aluminum threads of the cylinder head.

Special Tool

(A): 09930–10121

Tightening torque

Spark plug: 11 N·m (1.1 kgf-m, 8.5 lbf-ft)

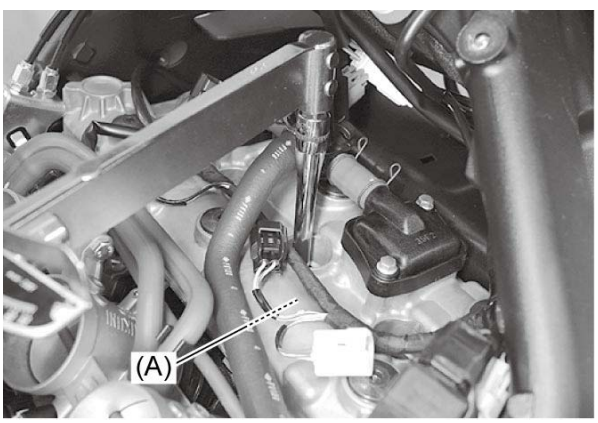



Tightening Torque Specifications

Fastening part	Tightening torque			Note
	N·m	kgf-m	lbf-ft	
Spark plug	11	1.1	8.5	☞

Reference:
For the tightening torques of fasteners not specified in this page, refer to:
Fasteners Information

Special Tool

09900–25008 Multi circuit tester set 1. Multi circuit tester (09900-25004) 2. Revolution sensor (09900-25005) 3. Lead wire (09900-25006) 4. Peak volt adapter (09900-25007)	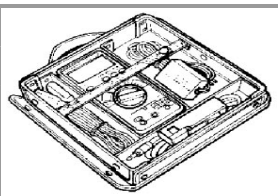	09900–25009 Needle point probe set	
09930–10121 Spark plug socket set	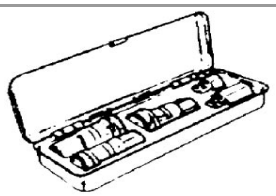	09930–11940 Torx® bit holder (3/8 sq.)	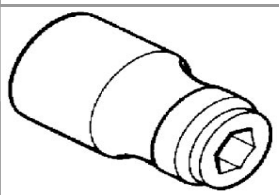
09940–63110 Torx® bit (E8) Torx® is the registered trademark of Camcar Division of Textron inc. U.S.A.	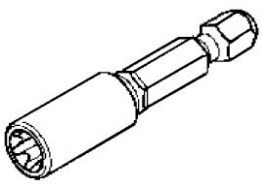		

Torx® is the registered trademark of Camcar Division of Textron inc. U.S.A.

Charging System Symptom Diagnosis

Condition	Possible Cause	Action
Generator does not charge	Open- or short-circuited lead wires, or loose lead connections.	*Repair, replace or connect properly.*
	Short-circuited, grounded or open generator coil.	*Replace.* ☞ ☞
	Short-circuited or punctured regulator/rectifier.	*Replace.* ☞
Generator does charge, but charging rate is below the specification	Lead wires tend to get short- or open-circuited or loosely connected at terminals.	*Repair or retighten.*
	Grounded or open-circuited generator coil.	*Replace.* ☞ ☞
	Defective regulator/rectifier.	*Replace.* ☞
	Defective cell plates in the battery.	*Replace the battery.* ☞
Generator overcharges	Internal short-circuit in the battery.	*Replace the battery.* ☞
	Damaged or defective regulator/rectifier.	*Replace.* ☞
	Poorly grounded regulator/rectifier.	*Clean and tighten ground connection.*
Unstable charging	Lead wire insulation frayed due to vibration, resulting in intermittent short-circuiting.	*Repair or replace.*
	Internally short-circuited generator.	*Replace.* ☞ ☞
	Defective regulator/rectifier.	*Replace.* ☞
Battery overcharges	Faulty regulator/rectifier.	*Replace.* ☞
	Faulty battery.	*Replace.* ☞
	Poor contact of generator lead wire coupler.	*Repair.*
Battery runs down quickly	Trouble in charging system.	*Check the generator, regulator/rectifier and circuit connections and make necessary adjustments to obtain specified charging operation.* ☞
	Cell plates have lost much of their active materials a result of overcharging.	*Replace the battery and correct the charging system.* ☞
	Internal short-circuit in the battery.	*Replace the battery.* ☞
	Too low battery voltage.	*Recharge the battery fully.* ☞
	Too old battery.	*Replace the battery.* ☞

Battery “sulfation”	Incorrect charging rate. (When not in use battery should be checked at least once a month to avoid sulfation.)	*Replace the battery.* ☞
	The battery was left unused in a cold climate for too long.	*Replace the battery if badly sulfated.* ☞
“Sulfation”, acidic white powdery substance or spots on surface of cell plates	Cracked battery case.	*Replace the battery.* ☞
	Battery has been left in a run-down condition for a long time.	*Replace the battery.* ☞

Battery Runs Down Quickly

Troubleshooting

Step	Action	Yes	No
1	Check accessories which use excessive amounts of electricity. ***Are accessories installed?***	Remove accessories.	Go to Step 2.
2	Check the battery for current leakage. ☞ ***Is the battery for current leakage OK?***	Go to Step 3.	• Short circuit of wire harness. • Faulty electrical equipment.
3	Measure the regulated voltage between the battery terminals. ☞ ***Is the regulated voltage OK?***	• Faulty battery. • Abnormal driving condition.	Go to Step 4.
4	Measure the resistance of the generator coil. ☞ ***Is the resistance of generator coil OK?***	Go to Step 5.	• Faulty generator coil. • Poor contact of couplers.
5	Measure the generator no-load performance. ☞ ***Is the generator no-load performance OK?***	Go to Step 6.	Faulty generator.
6	Inspect the regulator/rectifier. ☞ ***Is the regulator/rectifier OK?***	Go to Step 7.	Faulty regulator/rectifier.
7	Inspect wirings. ***Is the wirings OK?***	Faulty battery.	• Short circuit of wire harness. • Poor contact of couplers.

Charging System Diagram

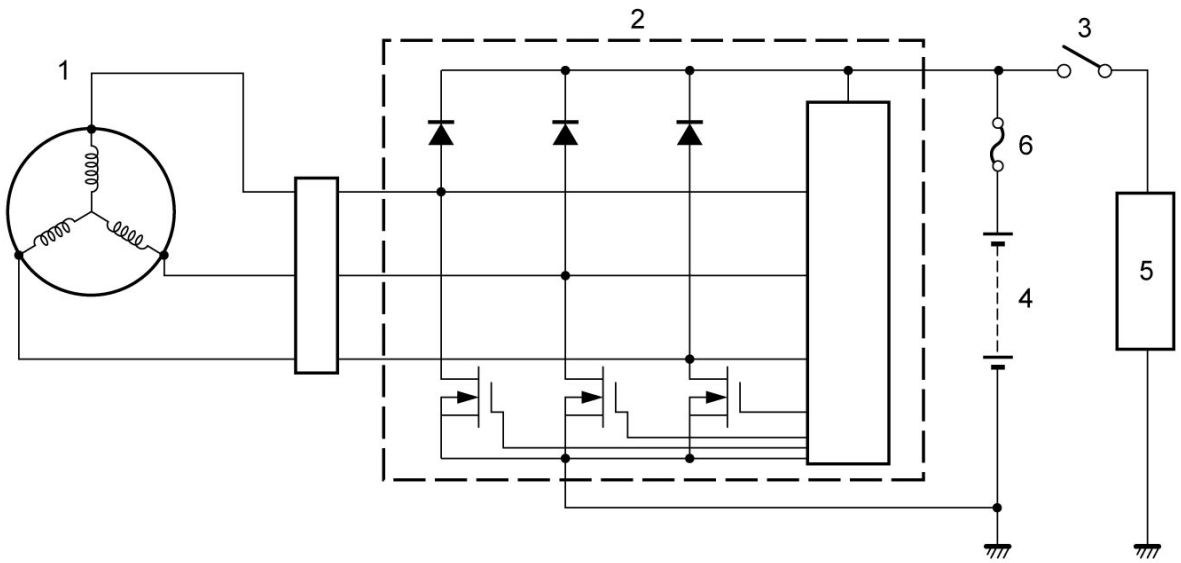

1.	Generator	3.	Ignition switch	5.	Load
2.	Regulator/rectifier	4.	Battery	6.	Main fuse

Battery Charging

NOTICE:
- **For charging the battery, make sure to use the charger specially designed for MF battery. Otherwise, the battery may be overcharged resulting in shortened service life.**
- **Exceeding the maximum charging rate for the battery can shorten its life. Never exceed the maximum charging rate for the battery.**
- **Do not remove the cap during charging.**
- **Position the battery with the cap facing upward during charging.**

Filling Electrolyte

NOTE:
When filling electrolyte, the battery must be removed from the vehicle and must be put on the level ground.

1) Remove the aluminum tape (1) which seals the battery filler holes (2).

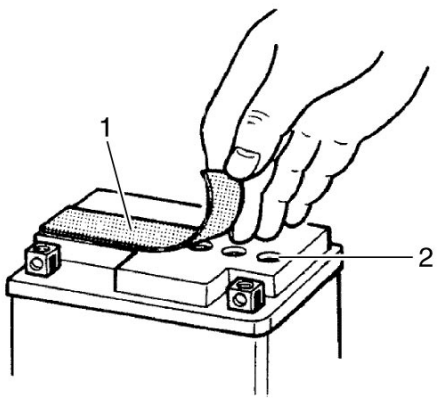

2) Remove the caps (1) from the electrolyte container.

NOTE:
- **Do not remove or pierce the sealed areas (2) of the electrolyte container.**
- **After filling the electrolyte completely, use the removed cap as sealing caps of battery-filler holes.**

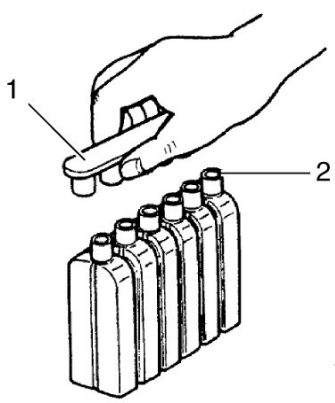

3) Insert the nozzles of the electrolyte container (1) into the electrolyte filler holes of the battery.

4) Hold the electrolyte container firmly so that it does not fall.

NOTE:
Do not allow any of the electrolyte to spill.

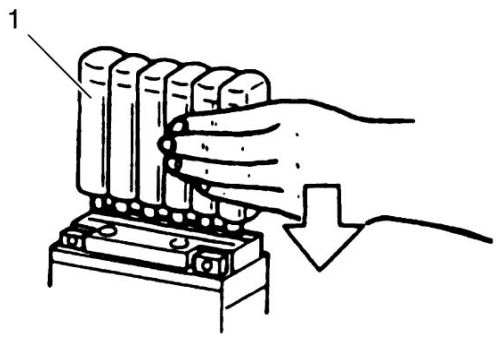

5) Make sure that air bubbles (1) rise to the top of each electrolyte container, and leave in this position for about more than 20 minutes.

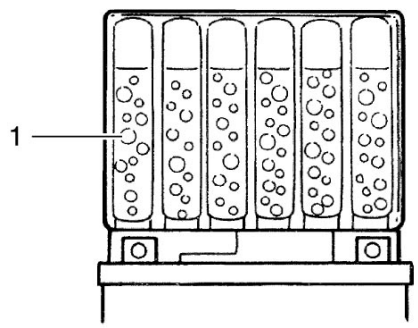

NOTE:
If no air bubbles come out from a filler port, tap the bottom of the electrolyte container two or three times.
Never remove the container from the battery.

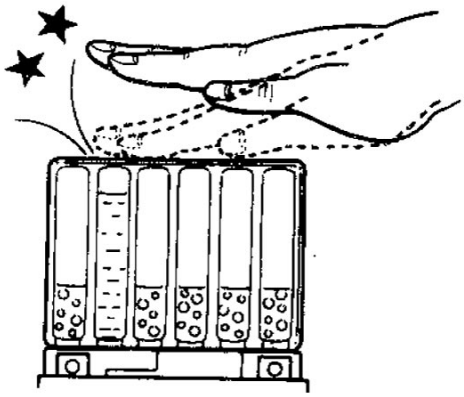

6) After confirming that the electrolyte has entered the battery completely, remove the electrolyte containers from the battery.

7) Wait for about 20 minutes.

8) Insert the caps (1) into the filler holes, pressing in firmly so that the top of the caps do not protrude above the upper surface of the battery's top cover.

NOTICE:

- **Once the caps are installed to the battery, do not remove the caps.**
- **Do not tap the caps with a hammer when installing them.**

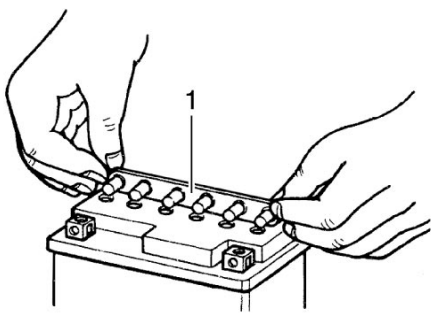

[A]

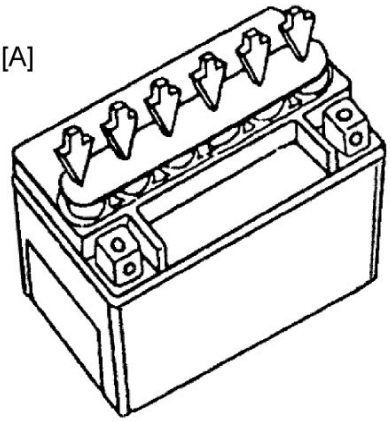

[B]

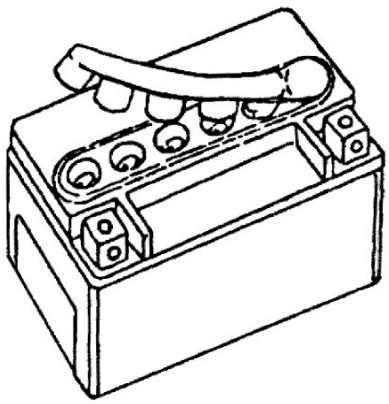

[A]:	Correct
[B]:	Incorrect

Battery Initial Charging

For initial charging, use the charger specially designed for MF battery.

Battery Recharging

NOTE:
When the motorcycle is not used for a long period, check the battery every 1 month to prevent the battery discharge.

1) Remove the battery from the motorcycle. ☞

2) Measure the battery voltage using the multi circuit tester.
If the voltage reading is less than the 12 V (DC), recharge the battery with a battery charger.

Recharging time

Standard charging [Standard]: 1.2 A for 5 to 10 hours
Fast charging [Standard]: 5 A for 1 hour

NOTICE:
The charging current must not exceed 5 A.

3) After recharging, wait at least 30 minutes and then measure the battery voltage using the multi circuit tester.
If the battery voltage is less than 12.5 V, recharge the battery again.
If the battery voltage is still less than 12.5 V after recharging, replace the battery with a new one.

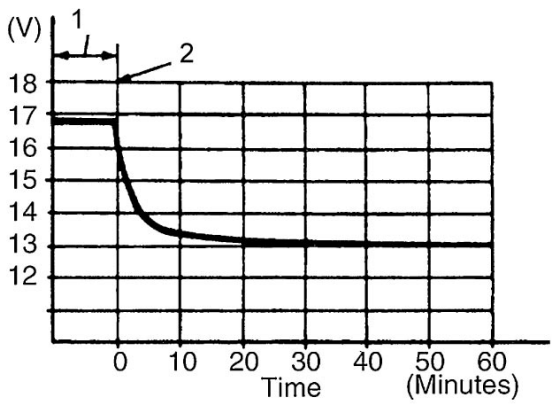

1.	Charging period	2.	Stop charging

4) Install the battery to the motorcycle. ☞

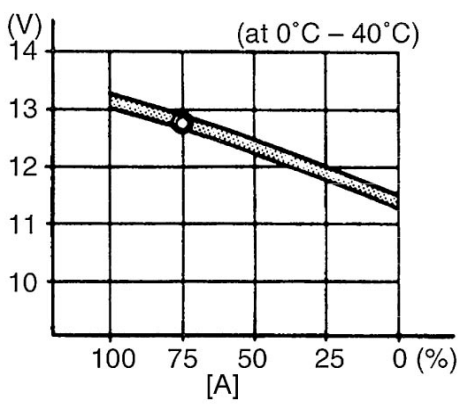

[A]:	Battery charged condition

Battery Current Leakage Inspection

1) Turn the ignition switch OFF.
2) Remove the seat and disconnect the battery (–) lead wire. ☞
3) Measure the current between battery (–) terminal and the battery (–) lead wire using the multi circuit tester. If the reading exceeds the specified value, leakage is evident.

NOTICE:
- **In case of a large current leak, turn the tester to high range first to avoid tester damage.**
- **Do not turn the ignition switch to ON position when measuring current.**

Battery leakage current

[Standard]: 3 mA or less

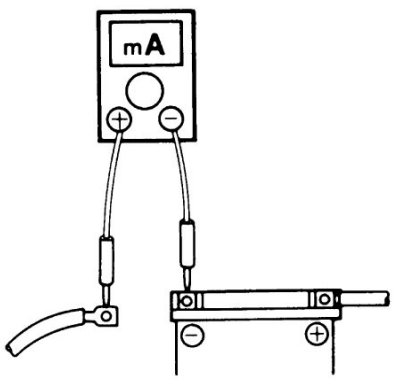

4) Connect the battery (–) terminal and install the seat. ☞

Battery Removal and Installation

Removal

1) Remove the front seat. ☞

2) Disconnect the battery (–) lead wire (1) first, then disconnect the battery (+) lead wire (2).

3) Remove the battery band (3) and battery (4) from the motorcycle.

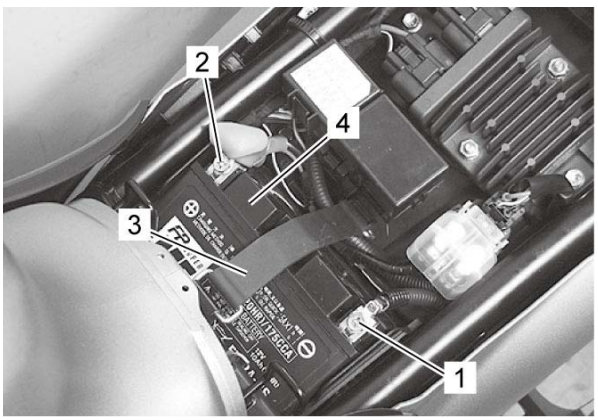

Installation

Install the tool holder and battery in the reverse order of removal. Pay attention to the following points:

NOTICE:
Never use anything except the specified battery.

- Connect the battery (+) lead wire (1) first, then connect battery (–) lead wire (2).
- Tighten the battery lead wire mounting bolts securely.

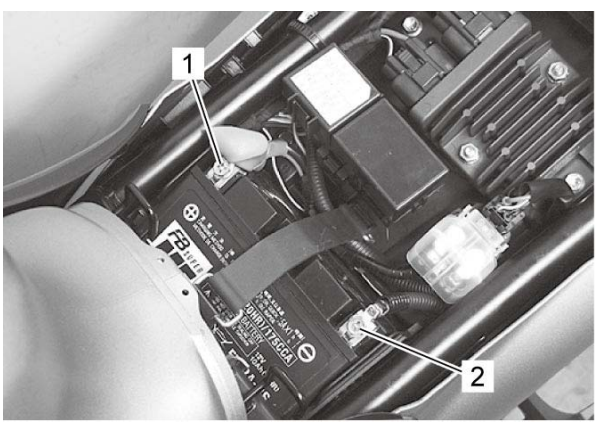

Battery Visual Inspection

1) Remove the front seat. ☞
2) Visually inspect the surface of the battery container.
   If any signs of cracking or electrolyte leakage from the sides of the battery have occurred, replace the battery with a new one.
   If the battery terminals are found to be coated with rust or an acidic white powdery substance, clean the battery terminals with sandpaper.
3) Install the seat.

Generator Inspection

Generator Coil Resistance

1) Lift and support the fuel tank. ☞

2) Disconnect the generator coupler (1).

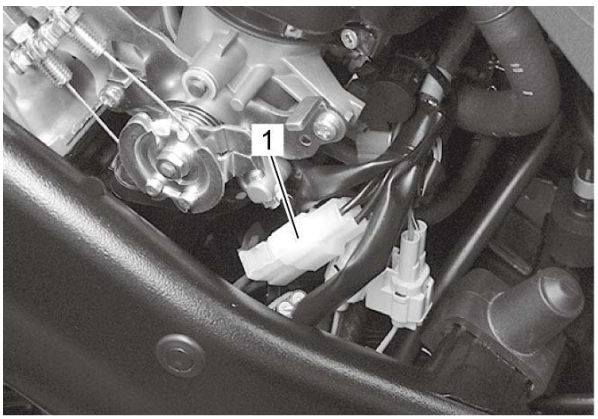

3) Measure the resistance between the three lead wires.
If the resistance is out of specified value, replace the stator with a new one. Also, check that the generator core is insulated properly.

Generator coil resistance

At 20 °C (68 °F)
Terminal to terminal [Standard]: 0.12 – 0.18 Ω

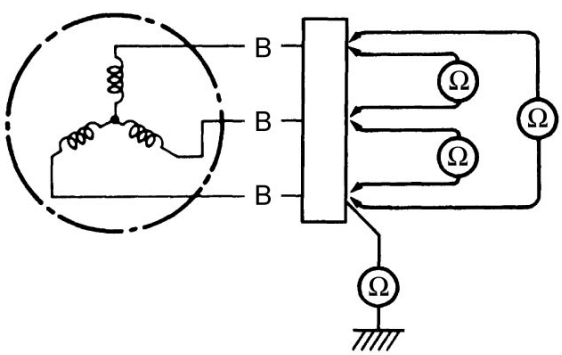

No-load Performance

1) Lift and support the fuel tank. ☞

2) Disconnect the generator coupler (1).

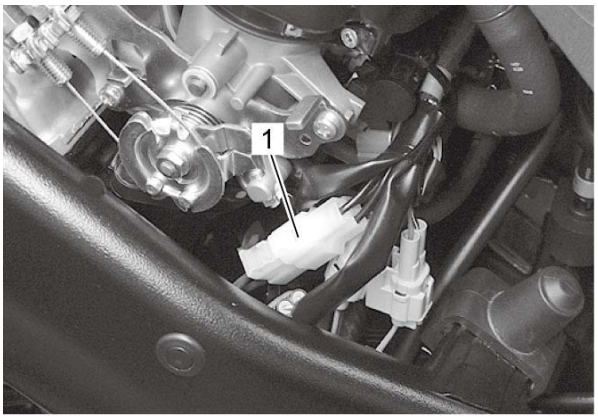

3) Start the engine and keep it running at 5000 r/min.

4) Using the multi circuit tester, measure the voltage between three lead wires.
If the tester reads under the specified value, replace the generator stator with a new one.

Generator no-load voltage

When engine is cold
At 5000 r/min [Standard]: 65 V (AC) or more

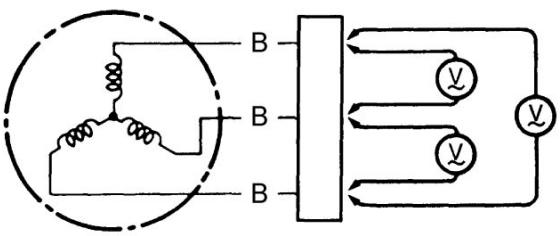

Generator Installation

1) Install the generator stator (1) and tighten the bolts to the specified torque.

Tightening torque

Generator stator bolt (a): 11 N·m (1.1 kgf-m, 8.5 lbf-ft)
Generator lead wire clamp bolt (b): 11 N·m (1.1 kgf-m, 8.5 lbf-ft)

2) Install the grommet (2) to the generator cover.

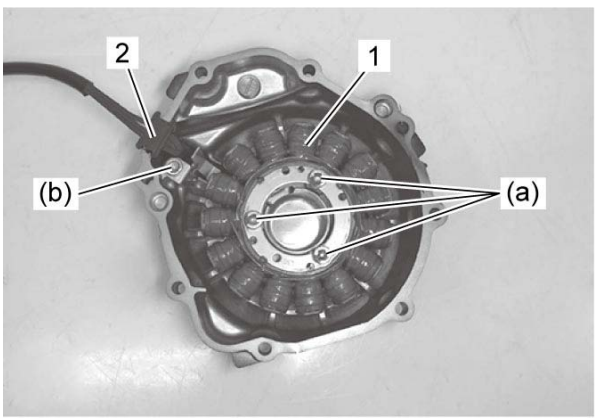

3) Degrease the tapered portion (1) of crankshaft and also the generator rotor (2). Use nonflammable cleaning solvent to wipe off oily or greasy matter and make these surfaces completely dry.

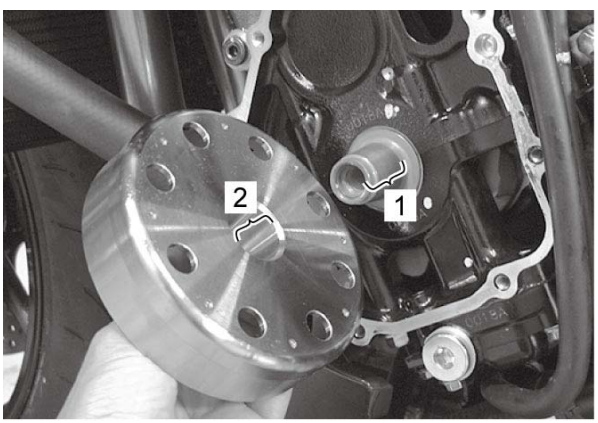

4) Install the generator rotor (1) on the crankshaft.

5) Hold the generator rotor with the special tool and tighten its bolt (2) to the specified torque.

Special Tool

(A): 09930–44521

Tightening torque

Generator rotor bolt (a): 160 N·m (16.3 kgf-m, 118.0 lbf-ft)

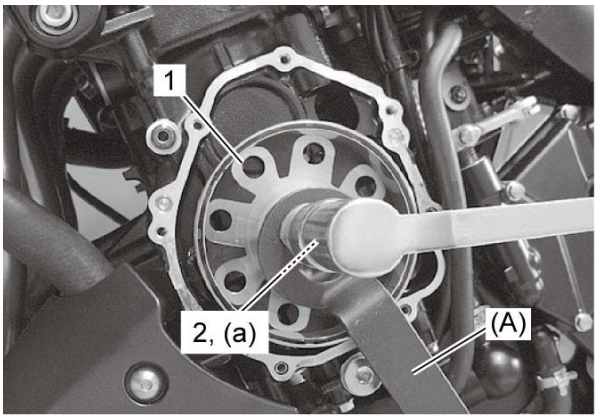

6) Apply a sealant lightly to the mating surfaces at the parting line between the upper and middle crankcases as shown.

"A": Sealant 99000–31140 (SUZUKI BOND 1207B)

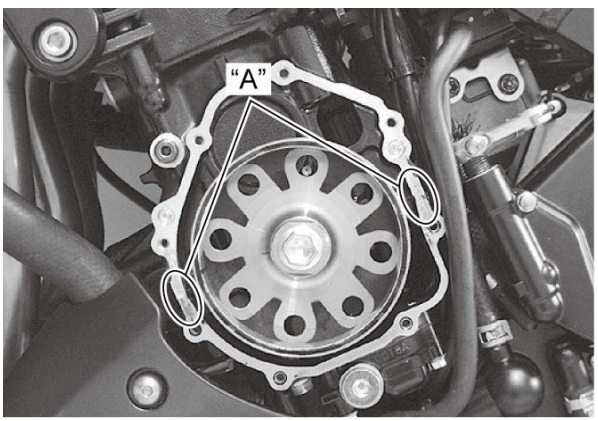

7) Install the dowel pins (1) and new gasket (2).

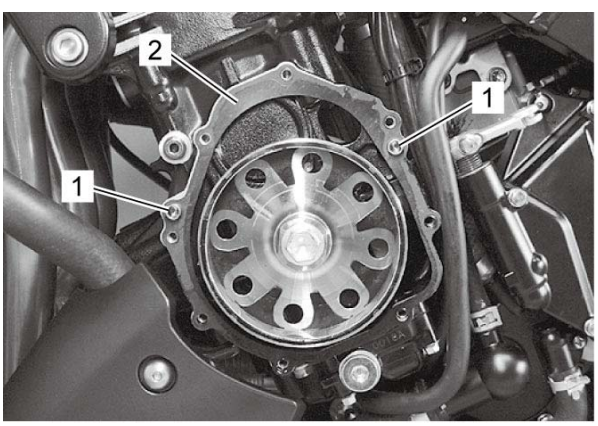

8) Install the generator cover (1) and tighten the generator cover bolts (2), (3) and (4) to the specified torque.

Tightening torque

Generator cover bolt (a): 10 N·m (1.0 kgf-m, 7.5 lbf-ft)

⚠CAUTION:
Be careful not to pinch the finger between the generator cover and the crankcase.

NOTE:
- **Fit the new gasket to the bolts (3).**
- **Fit the clamp to the bolt (4).**

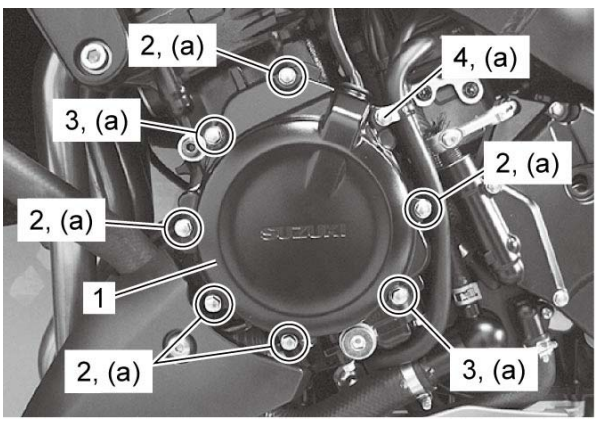

9) Connect the generator coupler (1).

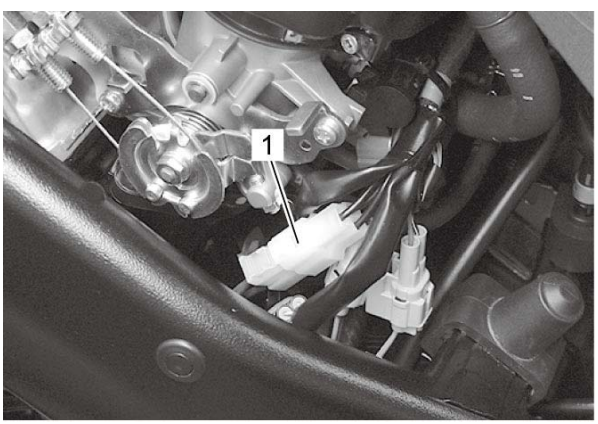

10) Connect the battery (–) lead wire. ☞

11) Install the fuel tank. ☞

12) Pour engine oil. ☞

Generator Removal

1) Disconnect the battery (–) lead wire. ☞

2) Drain engine oil. ☞

3) Lift and support the fuel tank. ☞

4) Remove the generator coupler (1).

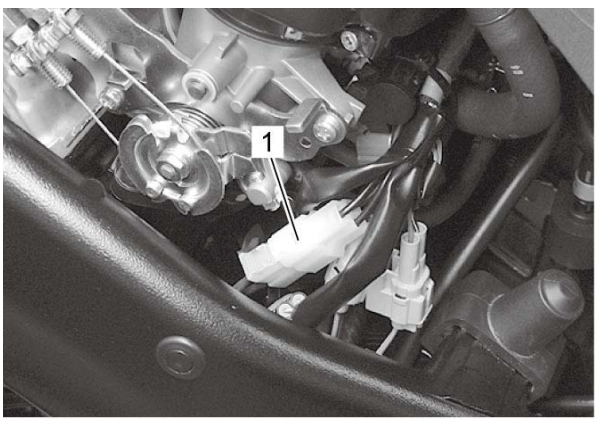

5) Remove the generator cover (1).

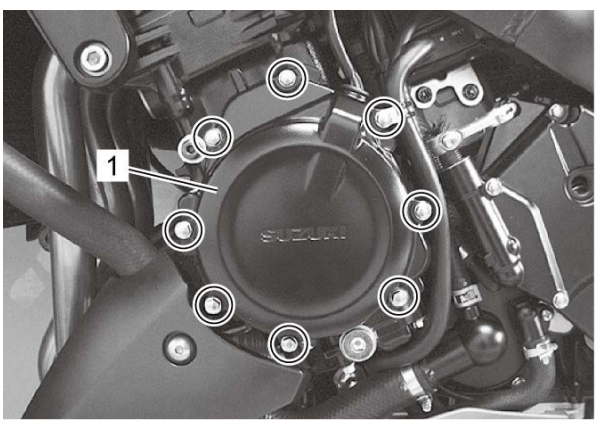

6) Remove the dowel pins (1) and gasket (2).

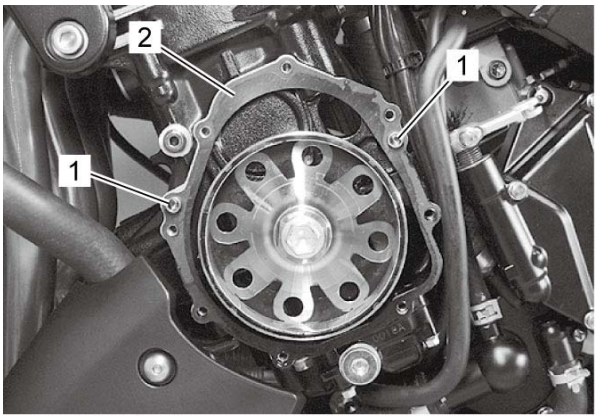

7) Hold the generator rotor (1) with the special tool and remove the generator rotor bolt (2).

Special Tool

(A): 09930–44521

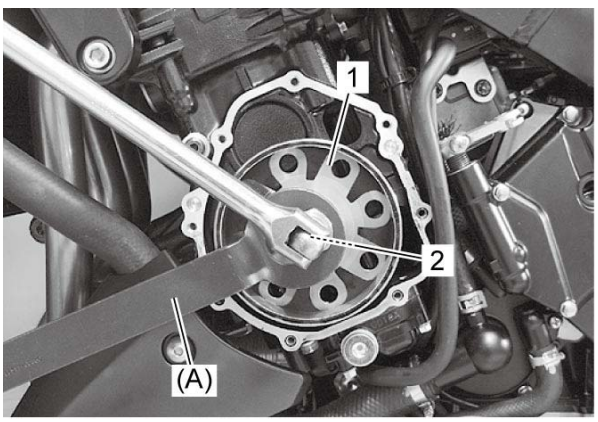

8) Remove the generator rotor (1) with the special tool.

Special Tool

(A): 09930–34980

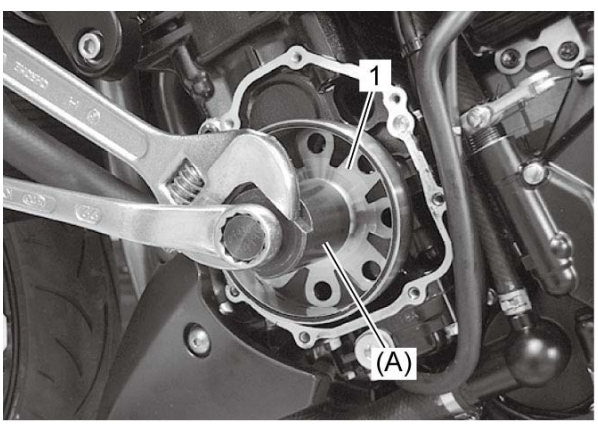

9) Remove the generator stator (1) and grommet (2).

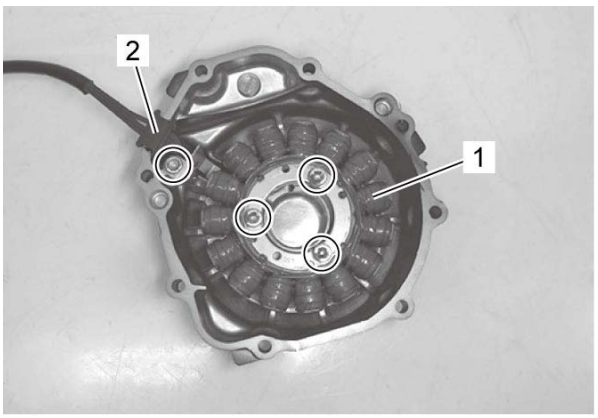

Regulated Voltage Inspection

1) Remove the front seat. ☞
2) Start the engine and keep it running at 5000 r/min with the dimmer switch turned HI position.
3) Measure the DC voltage between the battery (+) and (–) terminals using the multi circuit tester. If the voltage is not within the specified value, inspect the generator and regulator/rectifier.
   - Generator: ☞
   - Regulator/rectifier: ☞

NOTE:
When making this test, be sure that the battery is in fully charged condition.

Regulated voltage

Charging output
At 5000 r/min [Standard]: 14.0 – 15.5 V

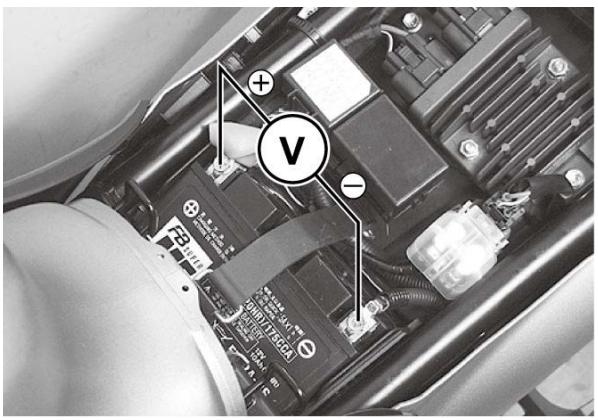

Regulator / Rectifier Inspection

1) Turn the ignition switch to OFF position.

2) Remove the regulator/rectifier. ☞

3) Set the “Diode test” of the multi circuit tester. Refer to ***Precautions for Circuit Tester***.

4) Check that the tester reads 1.4 V or more.

> **NOTE:**
> **If the tester reads less than 1.4 V when the tester probes are not connected, replace its battery.**

5) Measure the voltage between the terminals using the circuit tester as indicated in the following table. If the voltage is not within the specified value, replace the regulator/rectifier with a new one.

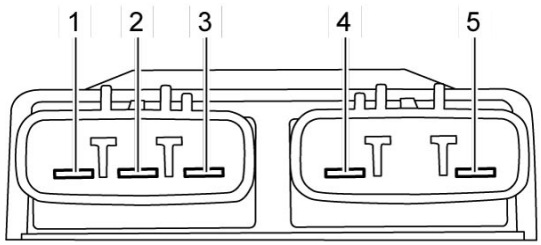

		(+) probe of tester to:				
		(1)	(2)	(3)	(4)	(5)
(–) probe of tester to:	(1)	—	*	*	*	0.3 – 0.6 V
	(2)	*	—	*	*	0.3 – 0.6 V
	(3)	*	*	—	*	0.3 – 0.6 V
	(4)	0.06 – 0.10 V	0.06 – 0.10 V	0.06 – 0.10 V	—	0.3 – 0.6 V
	(5)	*	*	*	*	—
* 1.4 V or more (tester’s battery voltage)						

Regulator / Rectifier Removal and Installation

Removal

1) Remove the front seat. ☞

2) Remove the regulator/rectifier (1).

3) Disconnect the regulator/rectifier couplers (2).

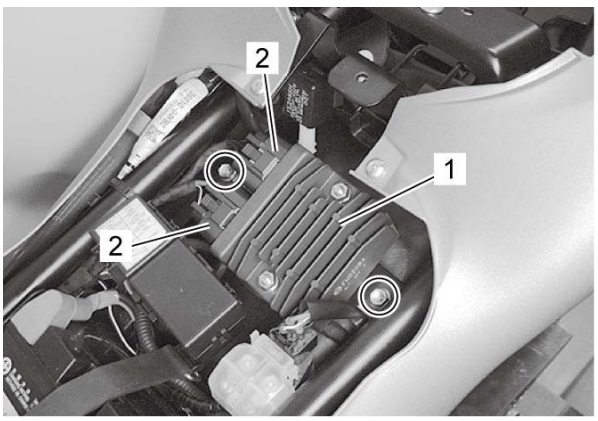

Installation

Install the regulator/rectifier in the reverse order of removal.

Tightening Torque Specifications

Fastening part	Tightening torque			Note
	N·m	kgf-m	lbf-ft	
Generator stator bolt	11	1.1	8.5	☞
Generator lead wire clamp bolt	11	1.1	8.5	☞
Generator rotor bolt	160	16.3	118.0	☞
Generator cover bolt	10	1.0	7.5	☞

Reference:
For the tightening torques of fasteners not specified in this page, refer to:
Fasteners Information

Recommended Service Material

Material	SUZUKI recommended product or Specification		Note
Sealant	SUZUKI BOND 1207B	P/No.: 99000–31140	☞

Special Tool

09930–34980	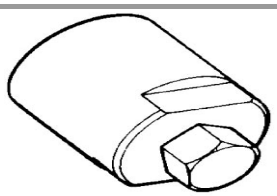	09930–44521	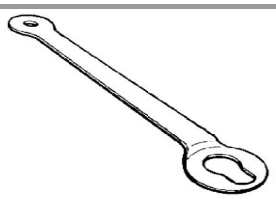
Rotor remover		Rotor holder	
☞		☞ ☞	

Starting System Symptom Diagnosis

Condition	Possible Cause	Action
Engine does not turn though the starter motor runs	Faulty starter clutch.	*Replace.* ☞
Starter switch is not effective	Run down battery.	*Repair or replace.* ☞
	Defective switch contacts.	*Replace.* ☞
	Brushes not seating properly on starter motor commutator.	*Repair or replace.* ☞
	Defective starter relay or starter interlock switch.	*Replace.* ☞
	Defective main fuse.	*Replace.*

Starter Motor Runs But Does Not Crank the Engine

The starter motor runs when the transmission is in neutral, but does not run when the transmission is in any position other than neutral, with the side-stand up.

Step	Action	Yes	No
1	Check the side-stand switch. ☞ ***Is the side-stand switch OK?***	Go to Step 2.	Faulty side-stand switch.
2	Check the starter clutch. ☞ ***Is the starter clutch OK?***	• Open circuit in wire harness. • Poor contact of coupler.	Faulty starter clutch.

Starter Motor Will Not Run

NOTE:
Make sure the fuse is not blown and the battery is fully-charged before diagnosing.

Troubleshooting

Step	Action	Yes	No
1	1) Shift the transmission into neutral. 2) Turn on the ignition switch with the engine stop switch in the "RUN" position and listen for a click from the starter relay when the starter switch is pushed. ***Is a click sound heard?***	Go to Step 2.	Go to Step 3.
2	Check if the starter motor runs when its terminal is connected to the battery (+) terminal. ***NOTICE:*** **Do not use thin "wire" because a large amount of current flows.** ***Does the starter motor run?***	• Faulty starter relay. • Loose or disconnected starter motor lead wire. • Loose or disconnected between starter relay and battery (+) terminal.	Faulty starter motor.
3	Measure the voltage between W/R wire (+) and B/Y wire (–) at the starter relay coupler when the starter switch is pushed. Refer to ***Starting System Diagram***. ***Is the voltage OK?***	Go to Step 4.	• Faulty ignition switch. • Faulty engine stop switch. • Faulty clutch switch. • Faulty ECM. • Faulty GP switch. • Faulty side-stand relay. • Faulty starter switch. • Faulty side-stand switch. • Poor contact of coupler. • Open circuit in wire harness.
4	Check the starter relay. ☞ ***Is the starter relay OK?***	Poor contact of the starter relay.	Faulty starter relay.

Side-stand Relay Removal and Installation

Removal

1) Turn the ignition switch OFF.

2) Remove the front seat. ☞

3) Remove the cap and side-stand relay (1).

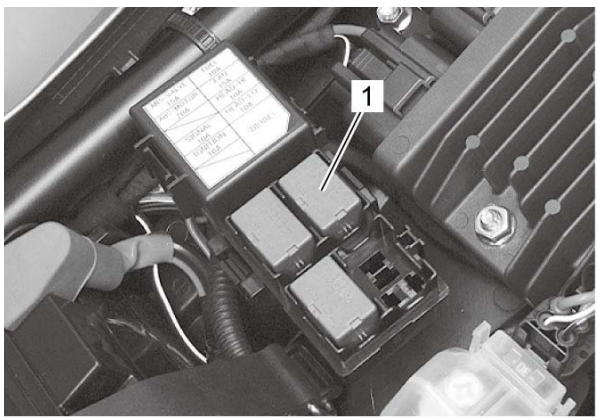

Installation

Reference: Starter Interlock System Parts Inspection

Install the side-stand relay in the reverse order of removal.

Starter Clutch Inspection

Reference: Starter Idle Gear / Starter Clutch Removal and Installation

Starter Clutch

1) Install the starter driven gear onto the starter clutch.

2) Turn the starter driven gear by hand to inspect the starter clutch for a smooth movement. The gear turns in one direction only. If a large resistance is felt for rotation, inspect the starter clutch or the starter clutch contacting surface on the starter driven gear for wear or damage.
If they are found to be damaged, replace them with new ones.



Starter Clutch Bearing / Starter Driven Gear

Inspect the starter clutch bearing (1) and starter clutch contacting surface on the starter driven gear (2) for wear and damage. If they are found to be damaged, replace them with new ones.

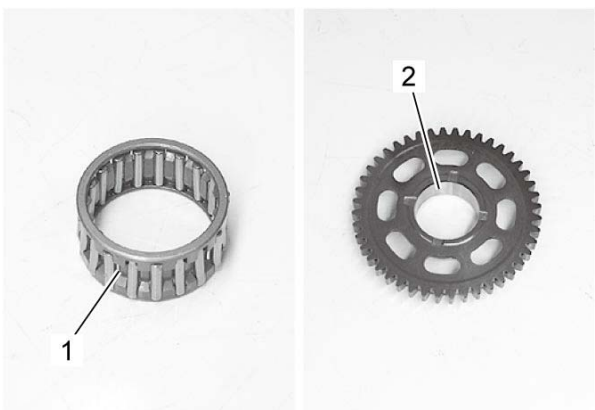

Starter Idle Gear No. 1 / Starter Idle Gear No. 2

Inspect the starter idle gear No. 1 and No. 2 for wear or damage. If any defects are found, replace it with a new one.



Starter Idle Gear / Starter Clutch Removal and Installation

Removal

1) Remove the right side cowling assembly (GSX-S1000F/FA). ☞

2) Remove the starter idle gear cap (1).

3) Remove the dowel pins (2) and gasket (3).

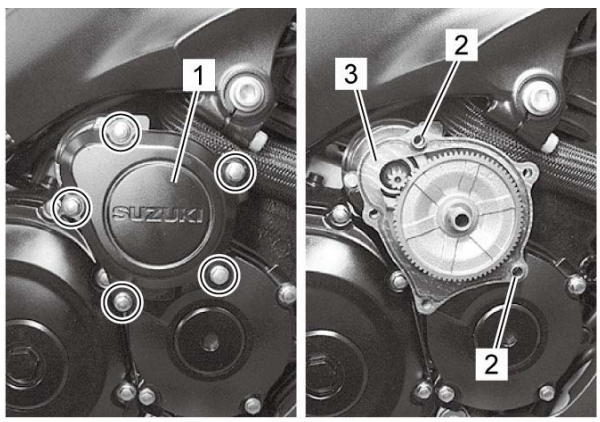

4) Remove the wave washer (1), washer (2) and starter idle gear No. 1 (3).

5) Remove the starter idle pin (4), bearing (5) and washer (6).

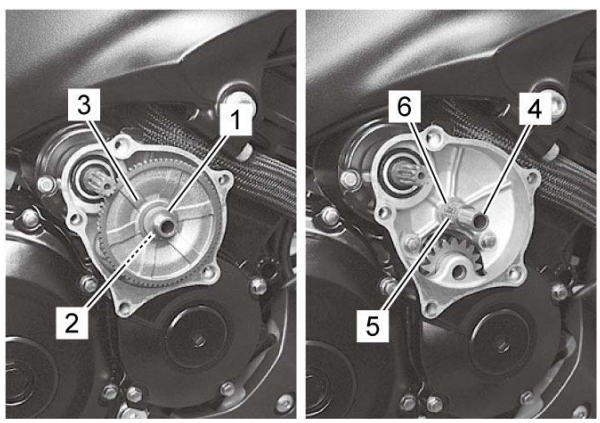

6) Remove the starter clutch cover (1).

7) Remove the dowel pins (2) and gasket (3).

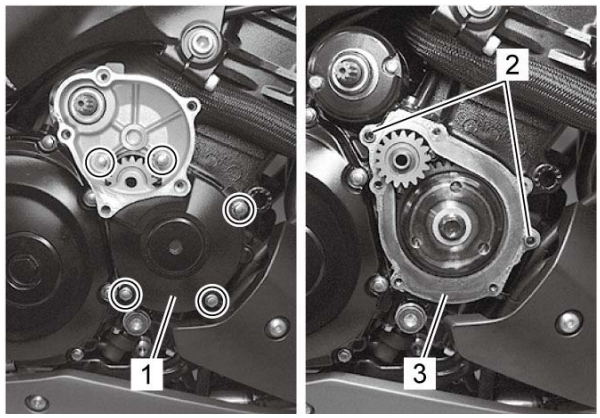

8) Remove the wave washer (1), starter idle gear No. 2 (2) and starter idle pin (3).

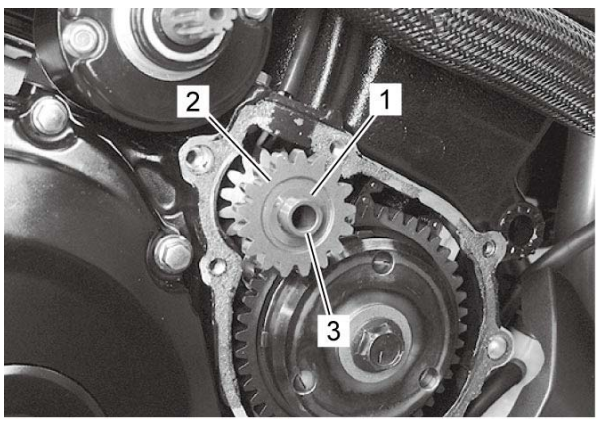

9) Hold the starter clutch (1) with the special tool.

Special Tool
(A): 09920–34830

10) Remove the bolt (2) and starter clutch (1).

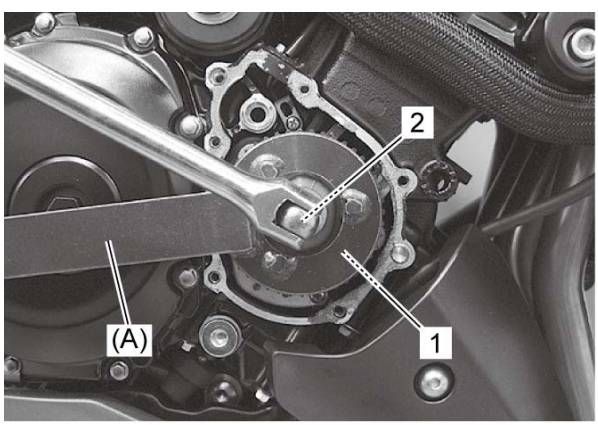

11) Remove the bearing (1) and starter driven gear (2).

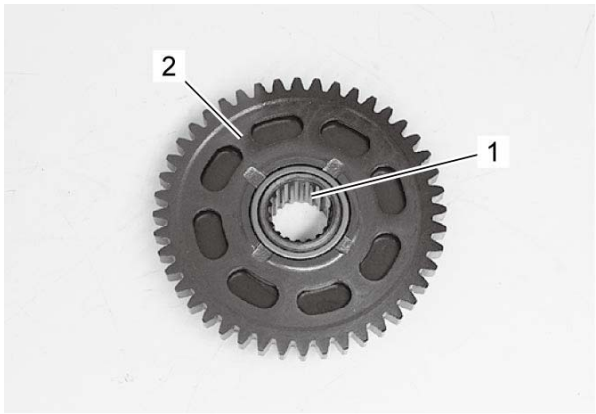

Installation

Reference: Starter Clutch Inspection

Install the starter clutch and starter idle gear in the reverse order of removal. Pay attention to the following points:

- Apply engine oil to the bearing (1).

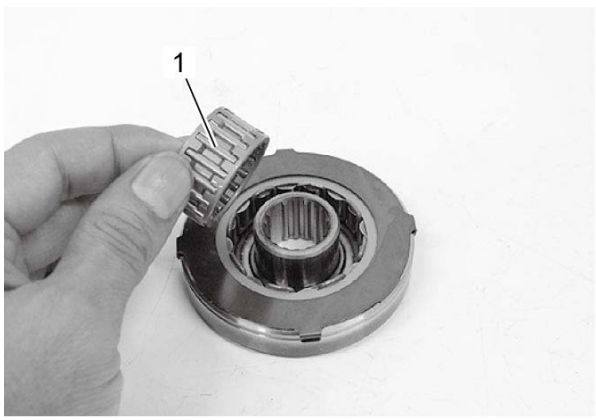

- Install the starter clutch (1) aligning the wide spline tooth (2) with that of crankshaft (3).

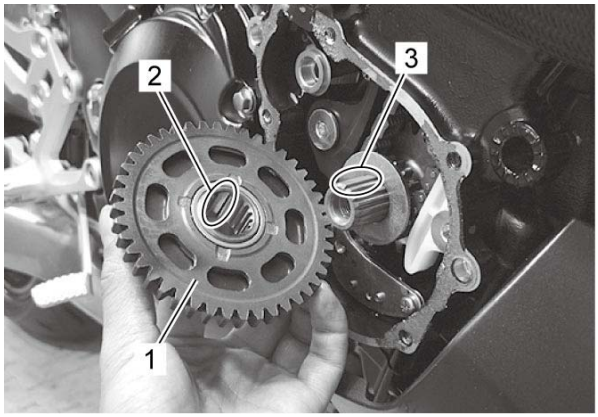

- Apply engine oil to the washer (1) and thread part of the starter clutch bolt (2).



- Hold the starter clutch (1) with the special tool and tighten the starter clutch bolt (2) to the specified torque.

Special Tool
(A): 09920–34830

Tightening torque
Starter clutch bolt (a): 54 N·m (5.5 kgf-m, 40.0 lbf-ft)

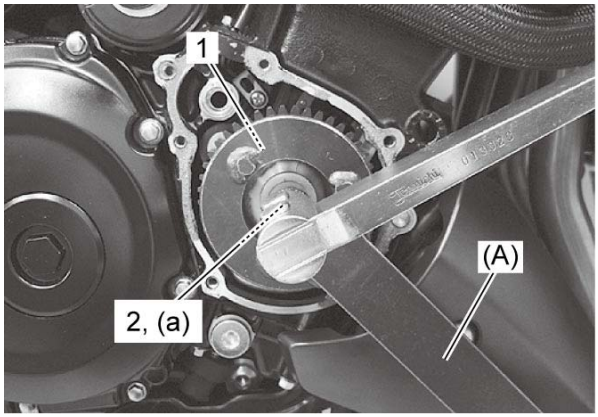

- Apply molybdenum oil solution to the boss of crankcase and starter clutch cover.
  “A”: Assembly lubrication (Molybdenum oil solution)

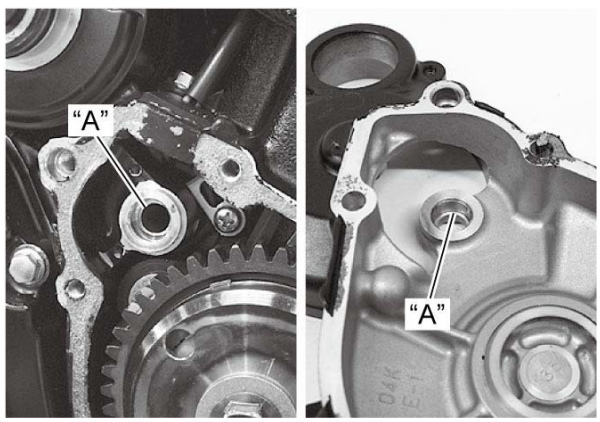

- Install the starter idle pin (1), starter idle gear No. 2 (2) and wave washer (3).

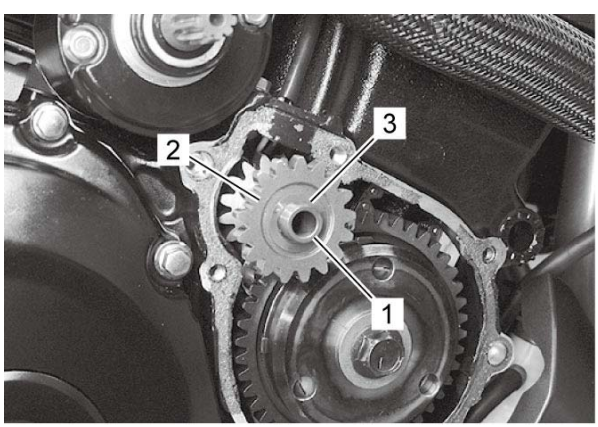

- Apply sealant to the grommet position (1) and mating surfaces parting lines (2) between the upper

and middle crankcases.

“A”: Sealant 99000–31140 (SUZUKI BOND 1207B)

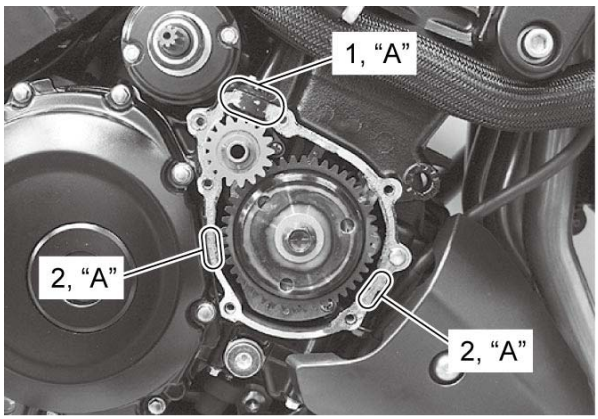

- Apply grease to the new O-ring (1).

  “A”: Grease 99000–25011 (SUZUKI SUPER GREASE A)
- Install the dowel pins (2) and new gasket (3).

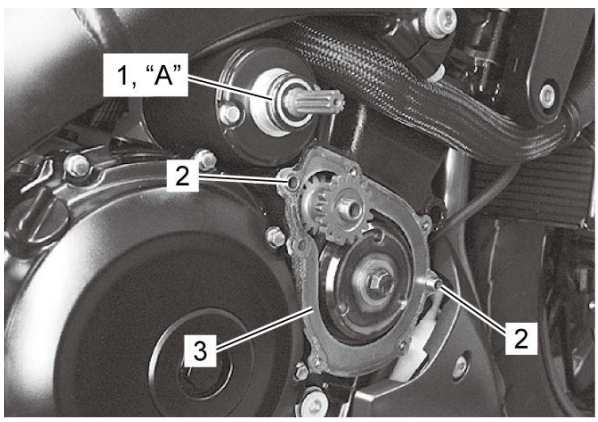

- Fit the new gasket to the starter clutch cover bolt (1) and tighten bolts (1) and (2) to the specified torque.

  Tightening torque

  Starter clutch cover bolt (a): 10 N·m (1.0 kgf-m, 7.5 lbf-ft)

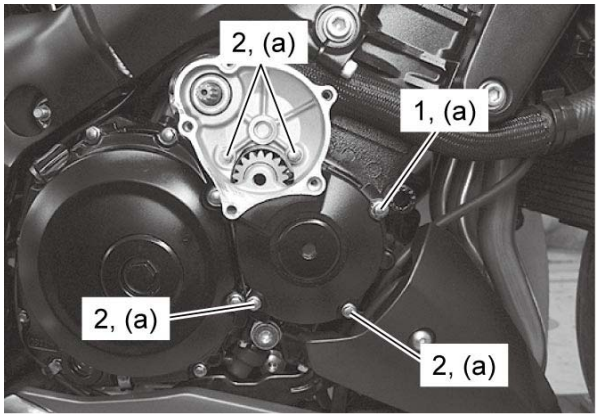

- Apply molybdenum oil solution to the boss of starter clutch cover and starter idle gear cap.

  “A”: Assembly lubrication (Molybdenum oil solution)

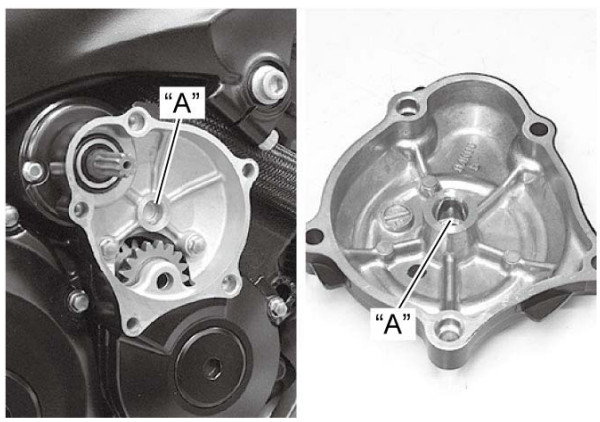

- Install the starter idle pin (1), washer (2) and bearing (3).
- Install the starter idle gear No. 1 (4), washer (5) and wave washer (6).

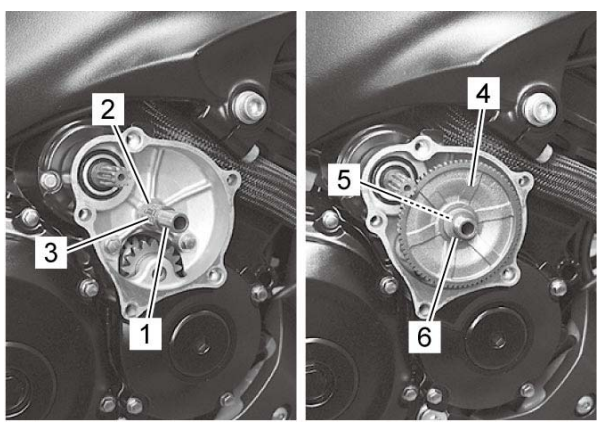

- Install the dowel pins (1) and new gasket (2).

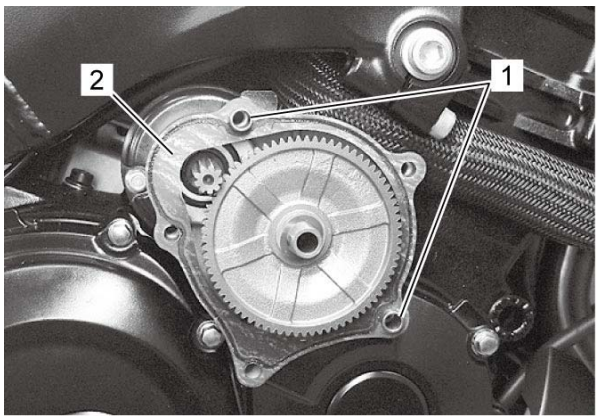

- Tighten the starter idle gear cap bolts (1) to the specified torque.

Tightening torque

Starter idle gear cap bolt (a): 10 N·m (1.0 kgf-m, 7.5 lbf-ft)

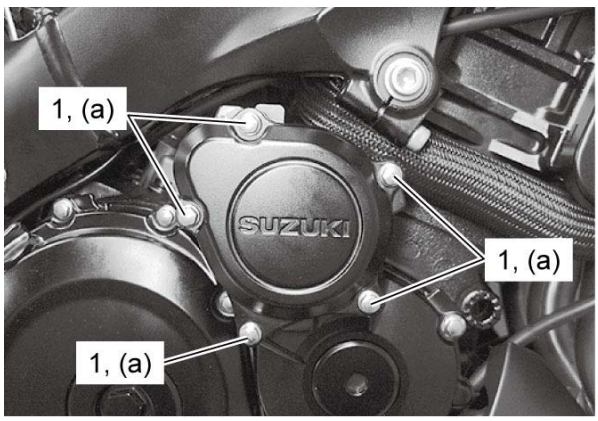

Starter Interlock System Parts Inspection

Check the interlock system for proper operation. If the interlock system does not operate properly, check each component for damage or abnormalities. If any abnormality is found, replace the component with a new one.

Side-stand Switch

1) Turn the ignition switch OFF.

2) Lift and support the fuel tank. ☞

3) Disconnect the side-stand switch coupler (1).

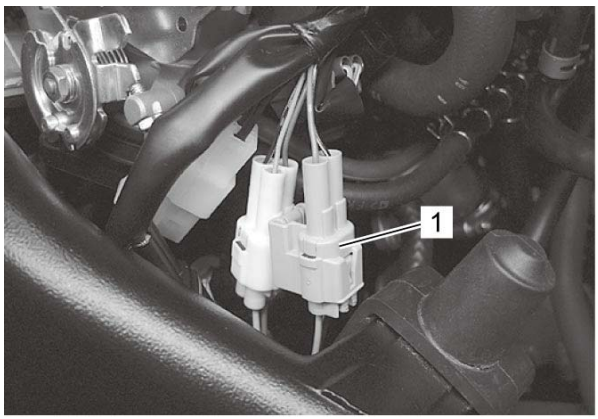

4) Set the “Diode test” of the multi circuit tester. Refer to ***Precautions for Circuit Tester***.

5) Check that the tester reads 1.4 V or more.

NOTE:
If the tester reads less than 1.4 V when the tester probes are not connected, replace its battery.

6) Measure the voltage between G ((+) probe) and B/W ((–) probe) lead wires of the side-stand switch.

Side-stand switch voltage

ON (Side-stand retracted) [Standard]: 0.4 – 0.6 V
OFF (Side-stand on the ground) [Standard]: 1.4 V or more

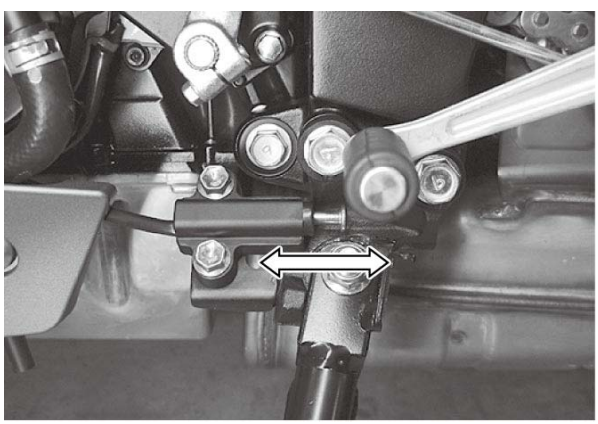

Side-stand Relay

Refer to ***Side-stand Relay Removal and Installation***.
First check the insulation between (3) and (4) terminals with a circuit tester. Then apply 12 V to (1) and (2) terminals, (+) to (1) and (–) to (2), and check the continuity between (3) and (4).
If there is no continuity, replace it with a new one.

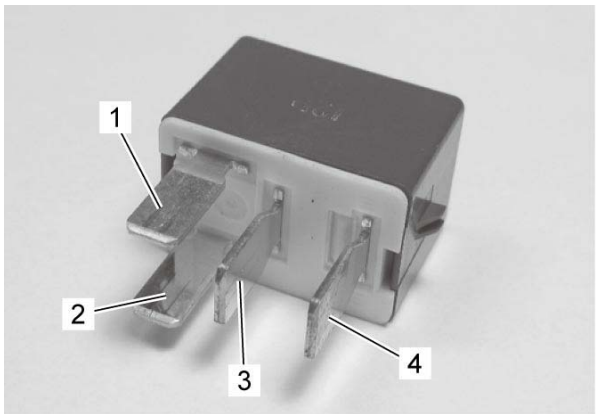

GP Switch

1) Turn the ignition switch OFF.
2) Lift and support the fuel tank. ☞
3) Disconnect the GP switch lead wire coupler (1).

NOTICE:
When disconnecting and connecting the GP switch lead wire coupler, make sure to turn off the ignition switch, or electronic parts may get damaged.

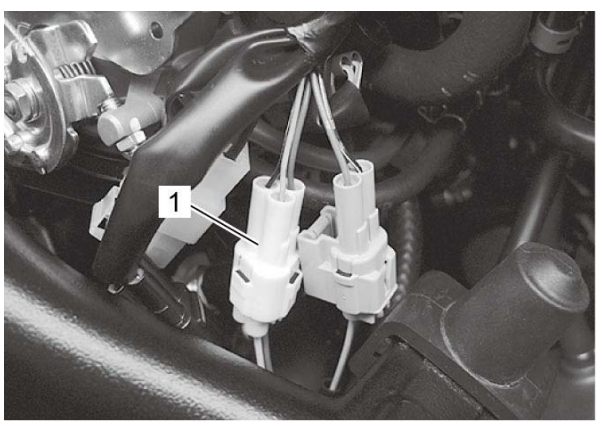

4) Check the continuity between Bl and B/W lead wires with the transmission in “NEUTRAL”.

	Bl	B/W
ON (Neutral)	○	○
OFF (Except neutral)		

5) Connect the GP switch lead wire coupler to the wiring harness.

6) Support the motorcycle with a jack.

7) Turn the ignition switch ON and side-stand to upright position.

8) Measure the voltage between P and B/W lead wires when shifting the gearshift lever from low to top.

GP switch voltage

From 1st to Top [Standard]: 0.6 V or more

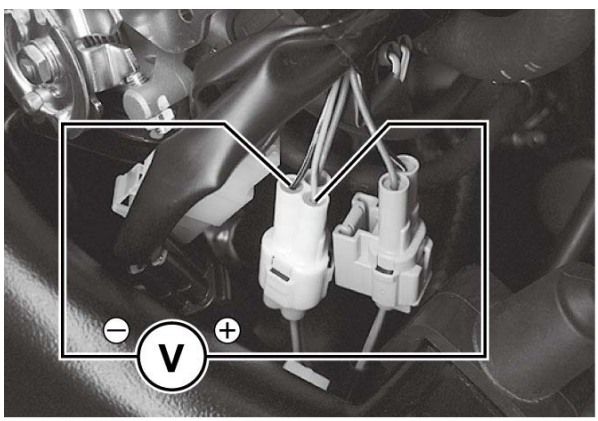

9) Turn the ignition switch OFF.

Starter Motor Assembly Removal and Installation

Reference: Starter Motor Components

Removal

1) Turn the ignition switch OFF and disconnect the battery (–) lead wire. ☞

2) Lift and support the fuel tank. ☞

3) Disconnect the starter motor lead wire (1) and remove the starter motor bolts (2).

4) Remove the starter motor (3).

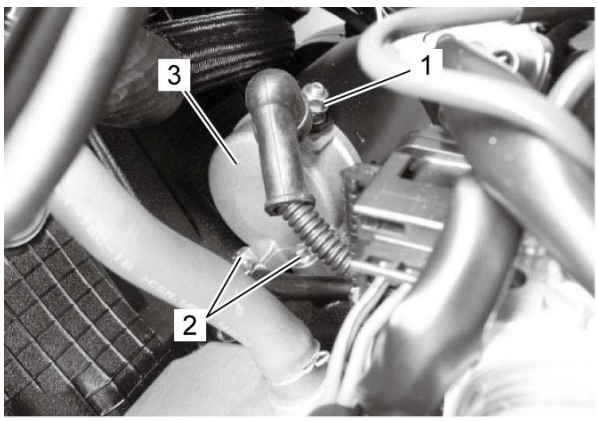

Installation

Install the starter motor in the reverse order of removal. Pay attention to the following points:

- Apply grease to the new O-ring.

  "A": Grease 99000–25011 (SUZUKI SUPER GREASE A)

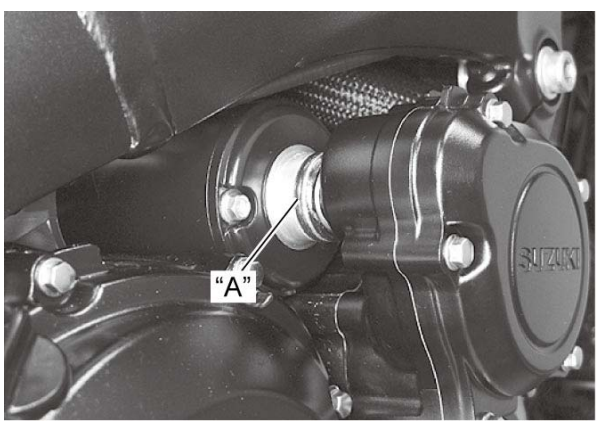

- Fit the engine ground lead wire (1) to the starter motor bolt (2).
- Tighten the starter motor bolts (2), (3) and starter motor terminal nut (4) to the specified torque.

Tightening torque

Starter motor bolt (a): 10 N·m (1.0 kgf-m, 7.5 lbf-ft)

Starter motor terminal nut (b): 6 N·m (0.61 kgf-m, 4.45 lbf-ft)

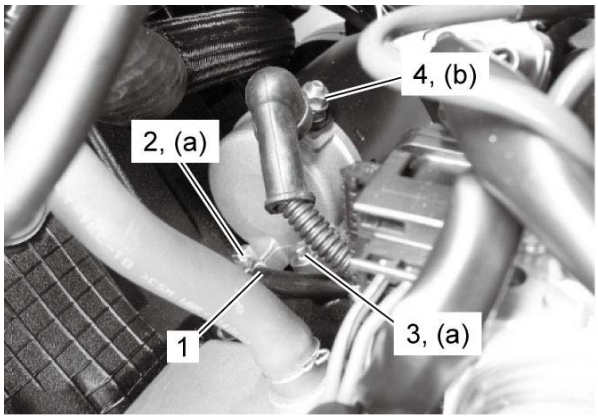

Starter Motor Components

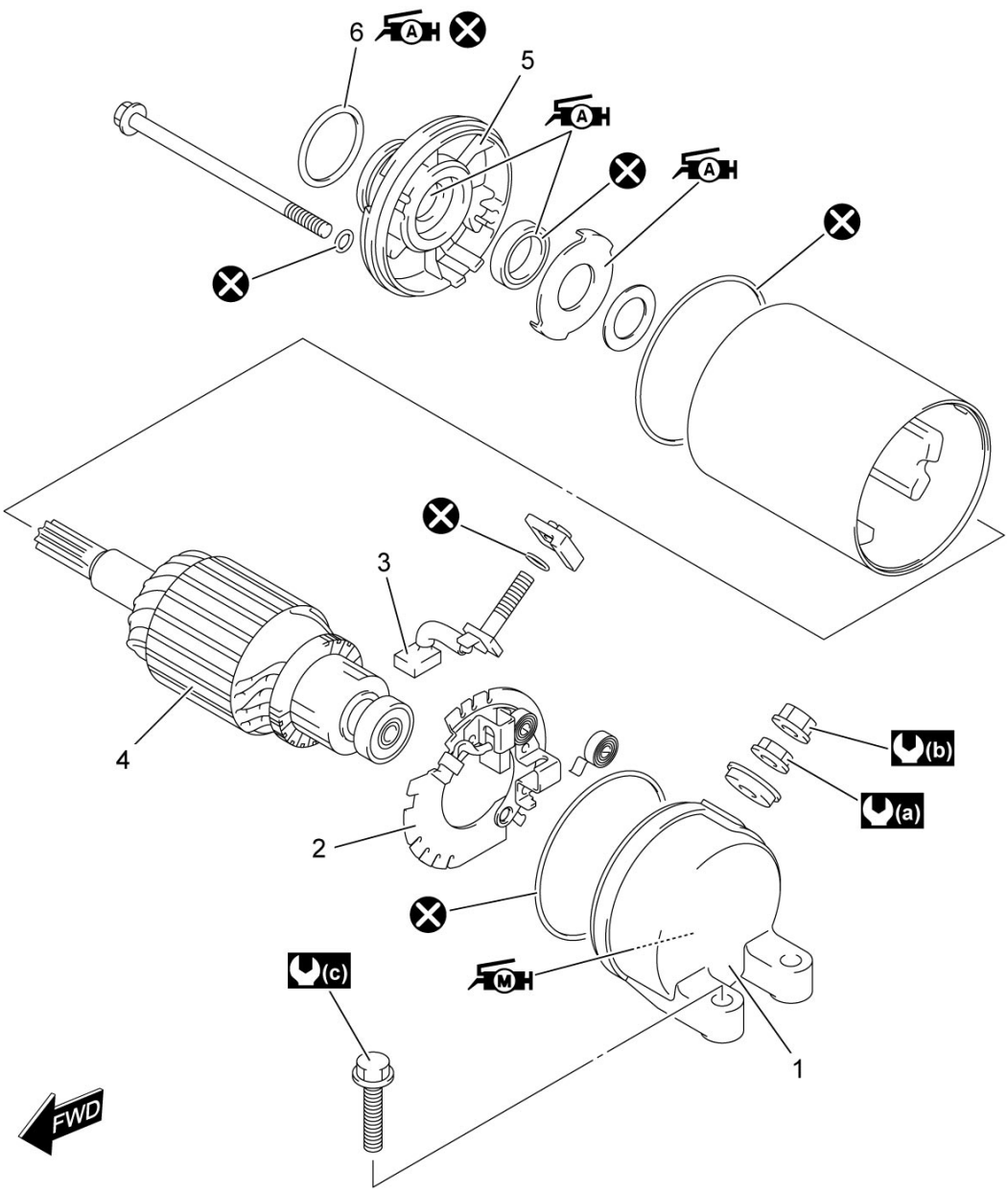

1.	Frame	4.	Armature	(a):	4.9 N·m (0.50 kgf-m, 3.65 lbf-ft)	A:	Apply grease.
2.	Brush holder	5.	Starter housing	(b):	6 N·m (0.61 kgf-m, 4.45 lbf-ft)	M:	Apply moly paste.
3.	Brush	6.	O-ring	(c):	10 N·m (1.0 kgf-m, 7.5 lbf-ft)	:	Do not reuse.

Starter Motor Disassembly and Reassembly

Refer to ***Starter Motor Assembly Removal and Installation***.

Disassembly

Disassemble the starter motor. ☞

Reassembly

Reference: Starter Motor Inspection

Reassemble the starter motor in the reverse order of removal. Pay attention to the following points:

- Replace the O-rings with new ones.
- Apply grease to the lip of the oil seal and bearing.

  "A": Grease 99000–25011 (SUZUKI SUPER GREASE A)

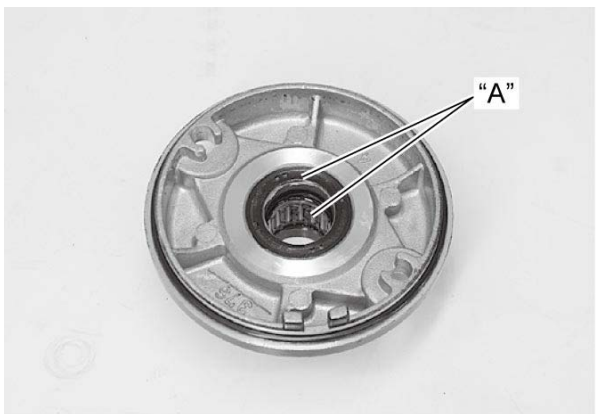

- Apply grease to the lock plate.

  "A": Grease 99000–25011 (SUZUKI SUPER GREASE A)

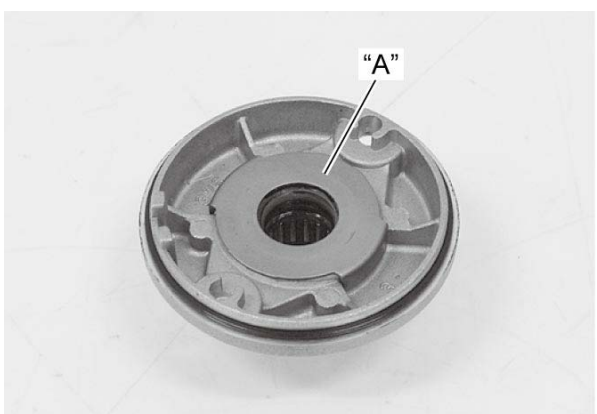

- Apply a small quantity of moly paste to the bearing position of the frame.

  "A": Assembly lubrication 99000–25140 (SUZUKI MOLY PASTE)

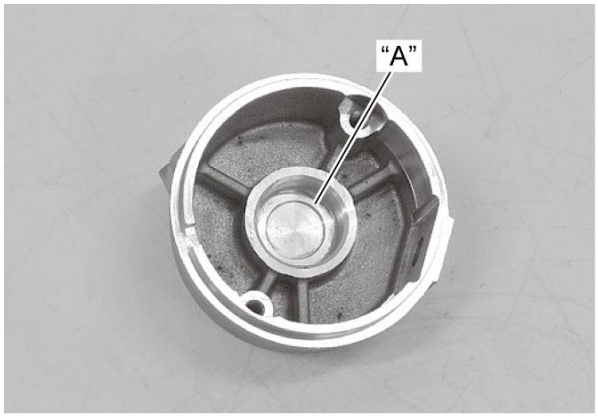

- Align the groove (1) on the brush holder with the groove (2) on the frame.
- Align the projection (3) on the frame with the projection (4) on the starter motor case.

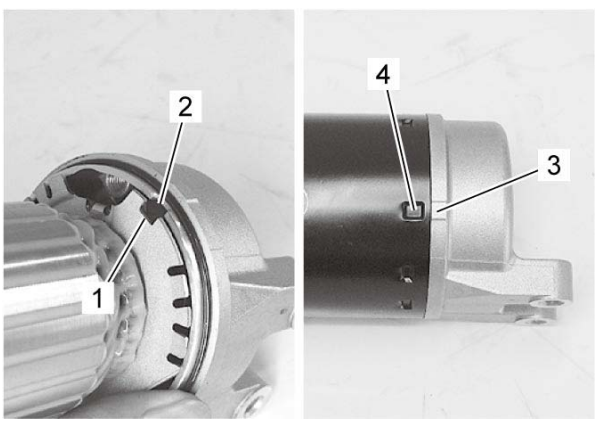

Starter Motor Inspection

Refer to ***Starter Motor Disassembly and Reassembly***.
Reference: Starter Motor Components

Carbon Brush

Inspect the carbon brushes for abnormal wear, cracks or smoothness in the brush holder.
If any damages are found, replace the brush holder or brush terminal set with a new one.
Make sure that the length “a” is not less than the service limit. If this length becomes less than the service limit, replace the brush with a new one.

Starter motor brush length

[Limit]: 8.5 mm (0.33 in)

Special Tool

09900–20102

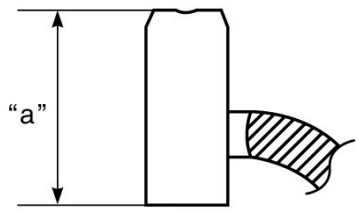

Commutator

Inspect the commutator for discoloration, abnormal wear or undercut “a”.
If the commutator is abnormally worn, replace the armature.
If the commutator surface is discolored, polish it with #400 sandpaper and wipe it using a clean, dry cloth.
If there is no undercut, scrape out the insulator (1) with a saw blade.

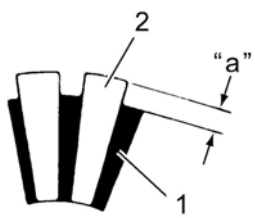

2.	Segment

Armature Coil

Measure for continuity between each segment. Measure for continuity between each segment and the armature shaft.
If there is no continuity between the segments or there is continuity between the segments and shaft, replace the starter motor assembly with a new one.

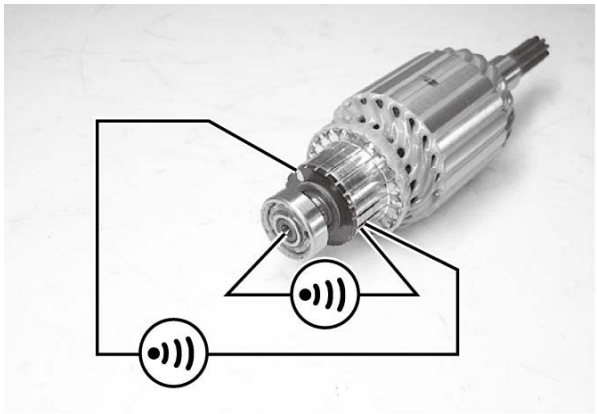

Bearing (Armature Shaft)

Check the armature shaft bearing (1) for abnormal noise and smooth movement. If any defects are found, replace the starter motor assembly with a new one.

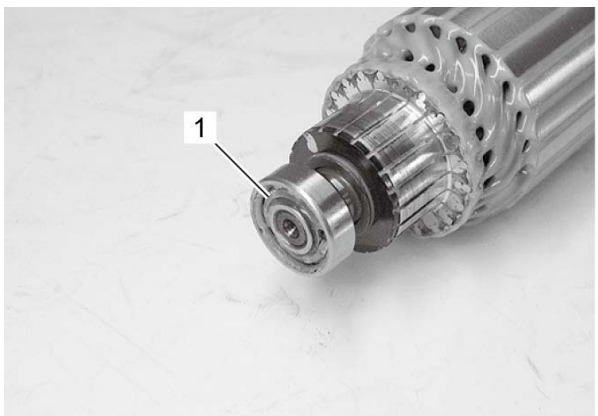

Oil Seal / Bearing (Starter Housing Assembly)

1) Check the seal lip (1) for damage. If any damage is found, replace the oil seal with a new one.

2) Check the bearing (2) for abnormal noise and smooth movement. If any defects are found, replace the starter housing assembly with a new one.

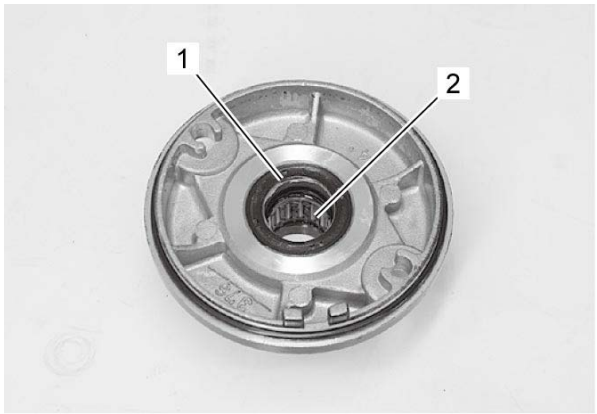
1
2

Starter Relay Inspection

Refer to ***Starter Relay Removal and Installation***.

1) Apply 12 V to (1) and (2) terminals and check for continuity between the positive and negative terminals using the multi circuit tester. If the starter relay clicks and continuity is found, the relay is OK.

NOTICE:
Do not apply battery voltage to the starter relay for five seconds or more, otherwise the relay coil may overheat and get damaged.

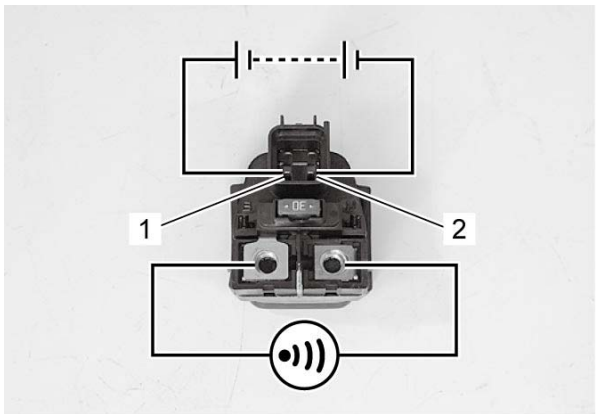

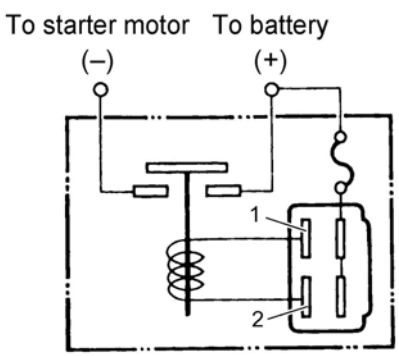

2) Measure the relay coil resistance between the terminals using the circuit tester. If the resistance is not within the specified value, replace the starter relay with a new one.

Starter relay resistance

[Standard]: 3 – 6 Ω

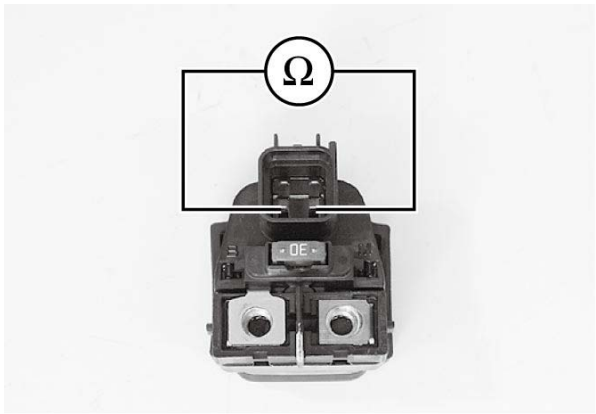
Ω

Starter Relay Protector Construction

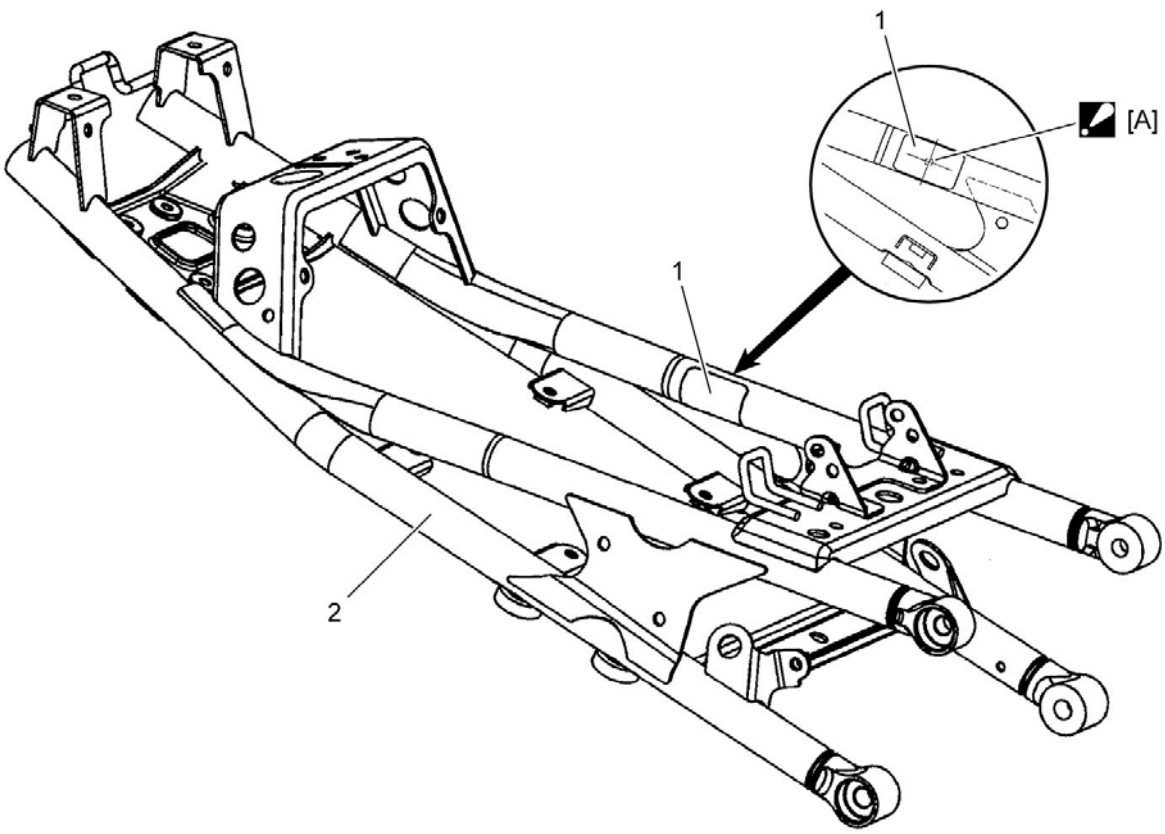

[A]:	Align the center of protector with the center of seat rail hole.	2.	Seat rail
1.	Starter relay protector		

Starter Relay Removal and Installation

Removal

1) Remove the front seat. ☞

2) Disconnect the battery (–) lead wire from the battery. ☞

3) Disconnect the starter relay coupler (1) and remove the starter relay cover (2).

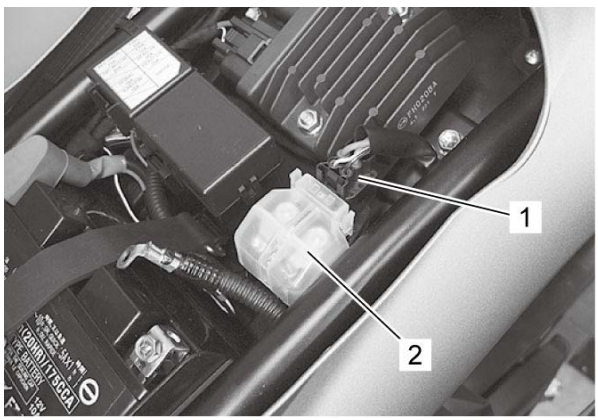

4) Disconnect the starter motor lead wire (1) and battery (+) lead wire (2).

NOTE:
Be sure to disconnect the starter motor lead wire (1) first, then disconnect the battery (+) lead wire (2).

5) Remove the starter relay (3).

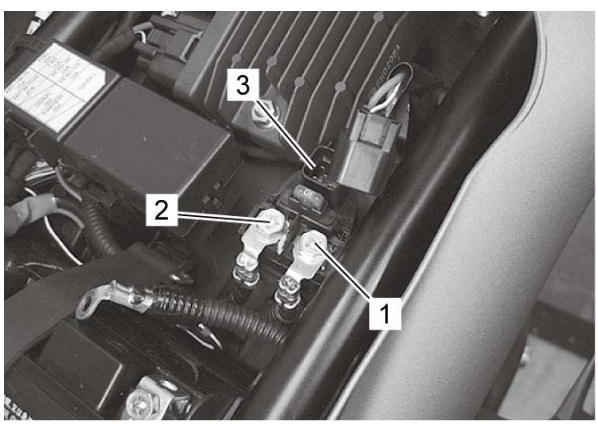

Installation

Reference: Starter Relay Inspection

Install the starter relay in the reverse order of removal.

Starter Switch Inspection

1) Turn the ignition switch OFF.

2) Remove the following parts.
- Headlight assembly (GSX-S1000/A): ☞
- Air cleaner box (GSX-S1000F/FA): ☞

3) Disconnect the right handle switch coupler (1).

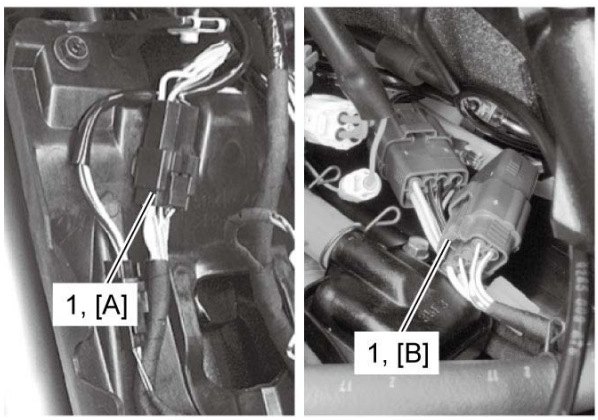

[A]:	GSX-S1000/A	[B]:	GSX-S1000F/FA

4) Inspect the starter switch for continuity with a tester.
If any abnormality is found, replace the right handle switch with a new one. ☞

Color / Position	O/W	Y/G	O/R	Y/W
•			○——○	
PUSH	○——○			

5) After finishing the starter switch inspection, install the removed parts.

Starting System Diagram

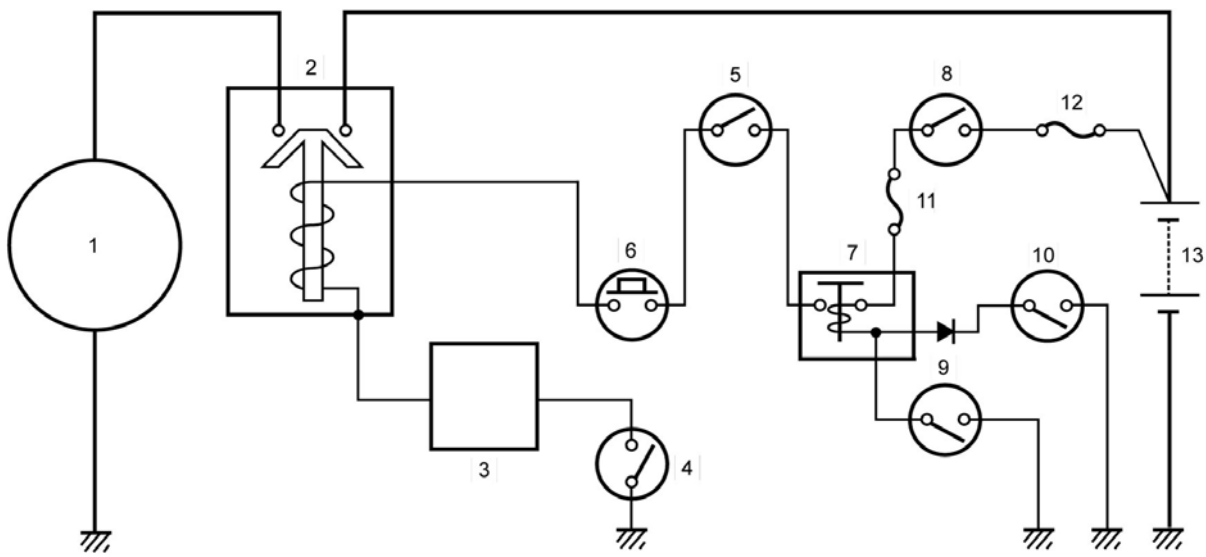

1.	Starter motor	5.	Engine stop switch	9.	Side-stand switch	13.	Battery
2.	Starter relay	6.	Starter switch	10.	GP switch		
3.	ECM	7.	Side-stand relay	11.	Ignition fuse		
4.	Clutch switch	8.	Ignition switch	12.	Main fuse		

Tightening Torque Specifications

Fastening part	Tightening torque			Note
	N·m	kgf-m	lbf-ft	
Starter motor bolt	10	1.0	7.5	☞
Starter motor terminal nut	6	0.61	4.45	☞
Starter clutch bolt	54	5.5	40.0	☞
Starter clutch cover bolt	10	1.0	7.5	☞
Starter idle gear cap bolt	10	1.0	7.5	☞

Reference:
For the tightening torques of fasteners not specified in this page, refer to:
Starter Motor Components
Fasteners Information

Recommended Service Material

Material	SUZUKI recommended product or Specification		Note
Assembly lubrication	Molybdenum oil solution	—	☞☞
	SUZUKI MOLY PASTE	P/No.: 99000–25140	☞
Grease	SUZUKI SUPER GREASE A	P/No.: 99000–25011	☞☞☞☞
Sealant	SUZUKI BOND 1207B	P/No.: 99000–31140	☞

NOTE:
Required service material(s) is also described in:
Starter Motor Components

Special Tool

09900–20102	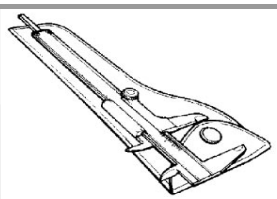	09920–34830	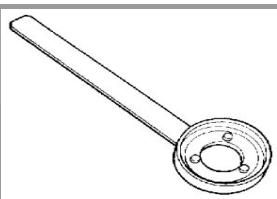
Vernier calipers (200 mm)		Starter clutch rotor holder	
☞		☞ ☞	

Brake Symptom Diagnosis

Condition	Possible Cause	Action
Insufficient brake power	Leakage of brake fluid from hydraulic system.	*Repair or replace.*
	Worn pads and/or disc.	*Replace.* ☞ ☞ ☞ ☞
	Oil adhesion on friction surface of pads.	*Clean disc and pads.*
	Air in hydraulic system.	*Bleed air.* ☞
	Not enough brake fluid in the reservoir.	*Replenish.* ☞
Brake squeaking	Carbon adhesion on pad surface.	*Repair surface with sandpaper.*
	Tilted pad.	*Correct pad fitting or replace.* ☞ ☞
	Damaged wheel bearing.	*Replace.* ☞ ☞
	Loose front wheel axle or rear wheel axle.	*Tighten to specified torque.* ☞
	Worn pads and/or disc.	*Replace.* ☞ ☞ ☞ ☞
	Foreign material in brake fluid.	*Replace brake fluid.* ☞
	Clogged return port of master cylinder.	*Disassemble and clean master cylinder.*
Excessive brake lever stroke	Air in hydraulic system.	*Bleed air.* ☞
	Insufficient brake fluid.	*Replenish fluid to specified level.* ☞
	Improper quality of brake fluid.	*Replace with correct fluid.* ☞
Leakage of brake fluid	Insufficient tightening of connection joints.	*Tighten to specified torque.* ☞
	Cracked hose.	*Replace.* ☞ ☞
	Worn master cylinder piston and/or cup.	*Replace master cylinder piston and/or cup.* ☞ ☞

	Worn brake caliper piston seal and dust seal.	*Replace brake caliper piston seal and dust seal.* ☞ ☞
Brake drags	Rusty part.	*Clean and lubricate.* ☞
	Insufficient front brake lever or rear brake pedal pivot lubrication.	*Lubricate.* ☞

Air Bleeding from Brake Line

Air trapped in the brake lines acts like a cushion to absorb a large proportion of the pressure developed by the master cylinder and thus greatly reduces the braking force. The presence of air bubbles is indicated by a “spongy” feel in the brake lever and low braking force. This condition is extremely dangerous, and therefore the air must be bled every time after replacing any parts in the brake lines in the following manner.

NOTE:
It is essential to purge air from the fluid circuit before inspecting the function of the brake fluid pressure-decreasing mode. Without air bleeding, trapped air in the circuit will enter the HU.

Front Brake

1) Place the motorcycle on a level surface and keep the handlebars straight.

2) Remove the reservoir cap (1) and diaphragm.

3) Fill the master cylinder reservoir with new brake fluid to the top of the inspection window (2). Place the reservoir cap to prevent dirt from entering.

Brake fluid (DOT 4)

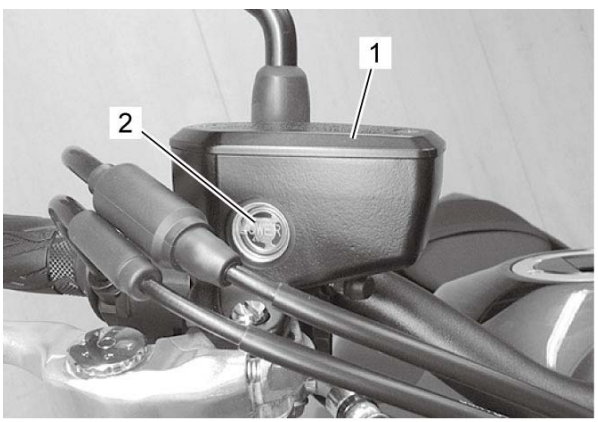

4) Attach a clear hose to the air bleeder valve, and insert the free end of the hose into a receptacle.

5) Operate the brake lever several times and, while holding the lever gripped, loosen the air bleeder valve (1) and drain the brake fluid into a receptacle.

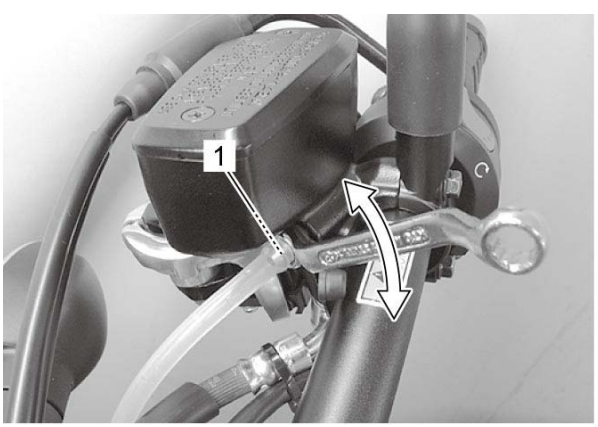



6) Tighten the air bleeder valve and release the brake lever slowly.

7) Tighten the air bleeder valve to the specified torque.

Tightening torque

Front brake master cylinder air bleeder valve: 6 N·m (0.61 kgf-m, 4.45 lbf-ft)

8) Attach a clear hose to the air bleeder valve, and insert the free end of the hose into a receptacle.

9) Operate the brake lever several times and, while holding the lever gripped, loosen the air bleeder valve (1) and drain the brake fluid into a receptacle.

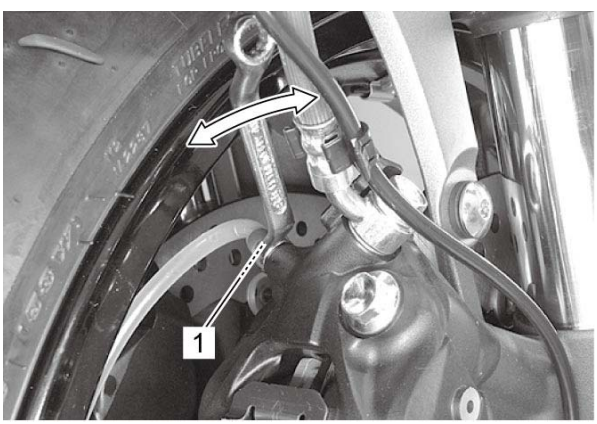



10) Tighten the air bleeder valve and release the brake lever slowly.
11) Repeat the steps 9) and 10) until the fluid is flowing out without bubbles.

NOTE:
While bleeding the brake system, replenish the reservoir with the brake fluid as necessary to keep the fluid above the lower level.

12) Tighten the air bleeder valve to the specified torque.

Tightening torque

Front brake air bleeder valve: 7.5 N·m (0.76 kgf-m, 5.55 lbf-ft)

13) Fill the reservoir with brake fluid to the depth “a” of 7 mm (0.3 in) from the reservoir tank edge.



14) Install the diaphragm and reservoir cap (1).
15) Tighten the reservoir cap screws (2) to the specified torque.

Tightening torque

Front reservoir cap screw (a): 1.5 N·m (0.15 kgf-m, 1.10 lbf-ft)

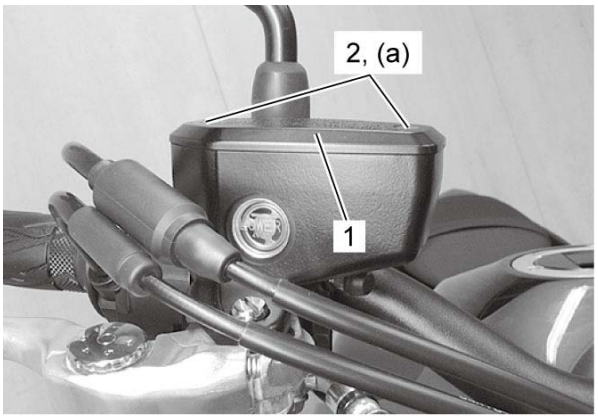

Rear Brake

1) Place the motorcycle on a level surface.

2) Remove the front seat. ☞

3) Remove the reservoir tank mounting bolt (1) and move the reservoir tank outside of the seat rail.

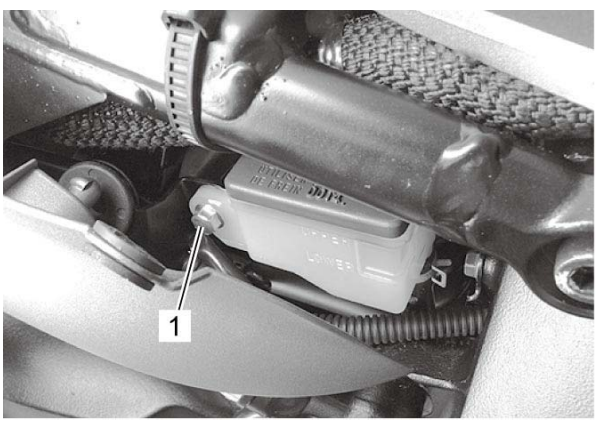

4) Remove the reservoir cap and diaphragm (1).

5) Fill the reservoir with brake fluid up to the upper level (2) of the reservoir. Place the reservoir cap to prevent dirt from entering.

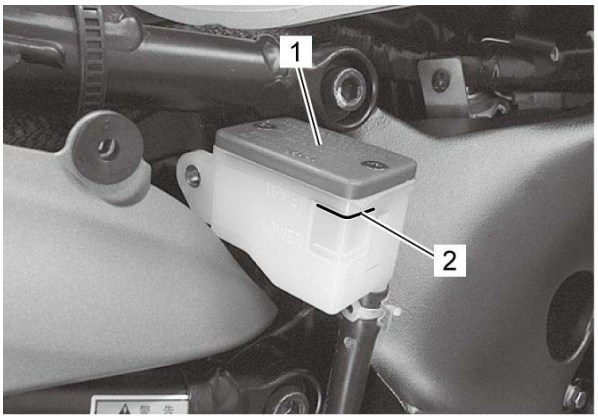

6) Attach a clear hose to the air bleeder valve, and insert the free end of the hose into a receptacle.

7) Operate the brake pedal several times and, while pushing the pedal, loosen the air bleeder valve (1) and drain the brake fluid into a receptacle.

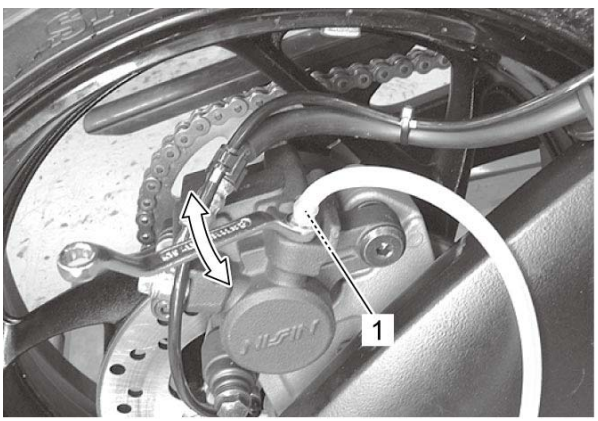

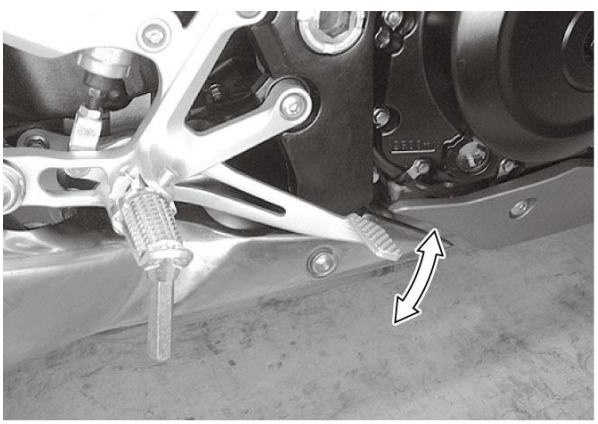

8) Tighten the air bleeder valve and release the brake pedal slowly.

9) Repeat the steps 7) and 8) until the fluid is flowing out without bubbles.

NOTE:
While bleeding the brake system, replenish the reservoir with the brake fluid as necessary to keep the fluid above the lower level.

10) Tighten the air bleeder valve to the specified torque.

Tightening torque

Rear brake air bleeder valve: 6 N·m (0.61 kgf-m, 4.45 lbf-ft)

11) Fill the reservoir with brake fluid to the upper level (1) of the reservoir.

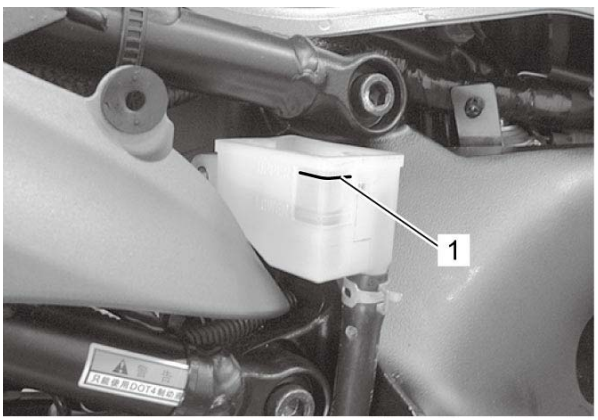

12) Install the diaphragm and reservoir cap (1).

13) Tighten the reservoir cap screws (2) to the specified torque.

Tightening torque

Rear reservoir cap screw (a): 1.2 N·m (0.12 kgf-m, 0.90 lbf-ft)

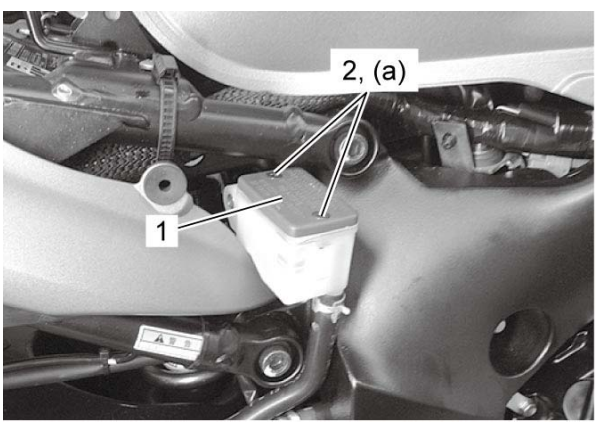

14) Install the reservoir tank. Refer to ***Rear Brake Hose Routing Diagram***.

15) Install the front seat.

Brake Fluid Information

⚠WARNING:

- **This brake system is filled with an ethylene glycol-based DOT 4 brake fluid. Do not use or mix different types of fluid, such as silicone-based or petroleum-based.**
- **Do not use any brake fluid taken from old, used or unsealed containers. Never reuse brake fluid left over from the last servicing or which has been stored for a long period of time.**
- **When storing brake fluid, seal the container completely and keep it away from children.**
- **When replenishing brake fluid, take care not to get dust into the fluid.**
- **When washing brake components, use new brake fluid. Never use cleaning solvent.**
- **A contaminated brake disc or brake pad reduces braking performance. Discard contaminated pads and clean the disc with high quality brake cleaner or neutral detergent.**
- **After removal and installation of the brake caliper, master cylinder, brake hose and ABS control unit/HU (if equipped), be sure to carry out the air bleeding operation.**
- **Brake hose seal washers should be replaced with the new ones to prevent fluid leakage.**

NOTICE:

The brake fluid is damaging to painted surfaces, plastics and rubber materials, and do not allow the fluid to spill on the surrounding parts.
If the fluid is spilled, flush it with water immediately.

Brake Fluid Level Check

1) Keep the motorcycle upright and place the handlebars straight.

2) Check the brake fluid level by observing the lower limit lines (1) on the front and rear brake fluid reservoirs. When the brake fluid level is below the lower limit line, inspect for brake pad wear and leaks and replenish with brake fluid that meets the following specification.

Brake fluid (DOT 4)



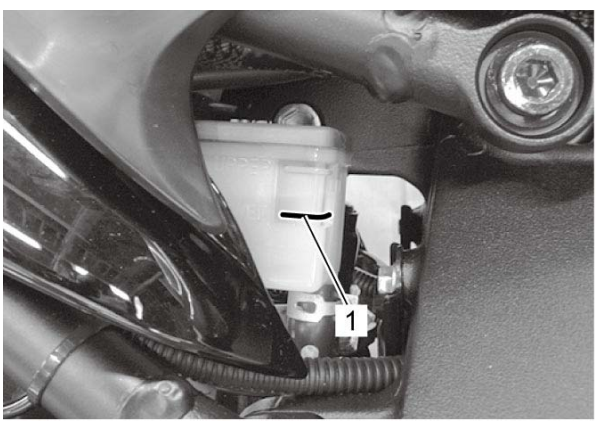

Brake Fluid Replacement

Front Brake

1) Place the motorcycle on a level surface and keep the handlebars straight.

2) Remove the brake fluid reservoir cap and diaphragm.

3) Suck up the old brake fluid as much as possible.



4) Fill the reservoir with new brake fluid.

Brake fluid (DOT 4)

5) Attach a clear hose to the air bleeder valve (1) and insert the free end of the hose into a receptacle.

6) Loosen the air bleeder valve, squeeze and release the brake lever and drain the old brake fluid out of the brake system.

NOTE:
While replacement the brake system, replenish the reservoir with the brake fluid as necessary to keep the fluid above the lower level.

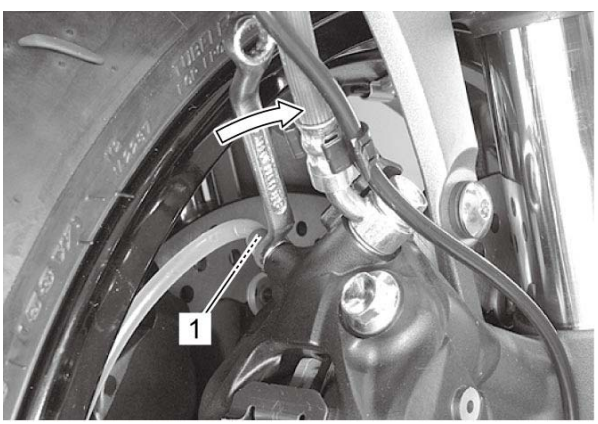



7) Bleed the air from the front brake system. ☞

Rear Brake

1) Place the motorcycle on a level surface.

2) Remove the front seat. ☞

3) Remove the reservoir tank mounting bolt (1) and move the reservoir tank outside of the seat rail.

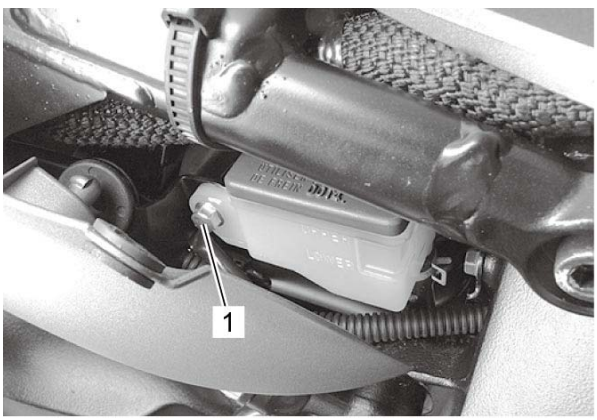

4) Remove the brake fluid reservoir cap and diaphragm.

5) Suck up the old brake fluid as much as possible.

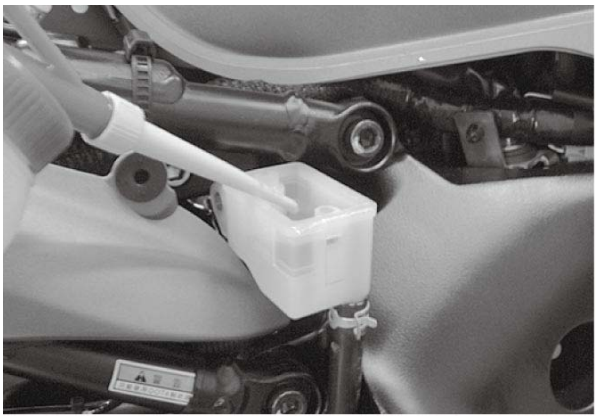

6) Fill the reservoir with new brake fluid.

Brake fluid (DOT 4)

7) Attach a clear hose to the air bleeder valve (1) and insert the free end of the hose into a receptacle.

8) Loosen the air bleeder valve (1) and pump the brake pedal until the old brake fluid flows out of the brake system.

> **NOTE:**
> **While replacement the brake system, replenish the reservoir with the brake fluid as necessary to keep the fluid above the lower level.**

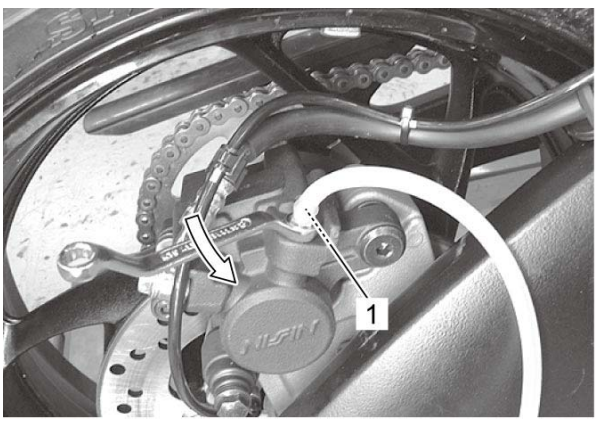

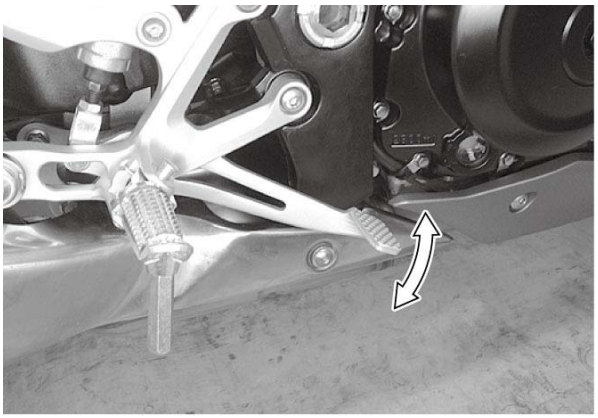

9) Bleed the air from the rear brake system. ☞

Brake Hose Inspection

Reference: Front Brake Hose Routing Diagram
Reference: Rear Brake Hose Routing Diagram

1) Lift and support the fuel tank. ☞

2) Inspect the brake hoses and hose joints for crack, damage or brake fluid leakage. If any defects are found, replace the brake hose with a new one.
- Front: ☞
- Rear: ☞

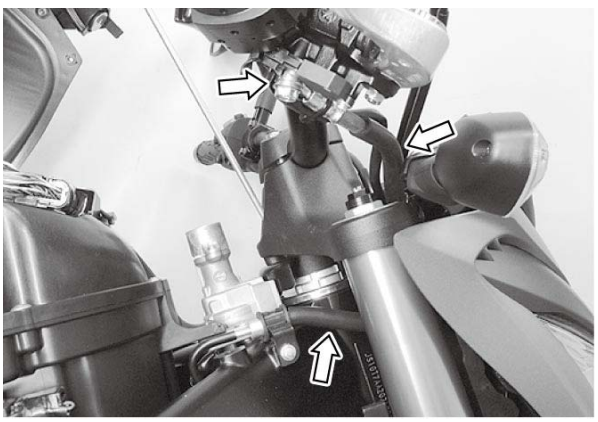



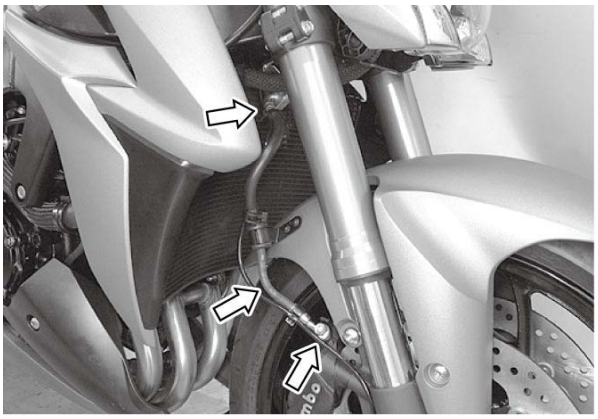

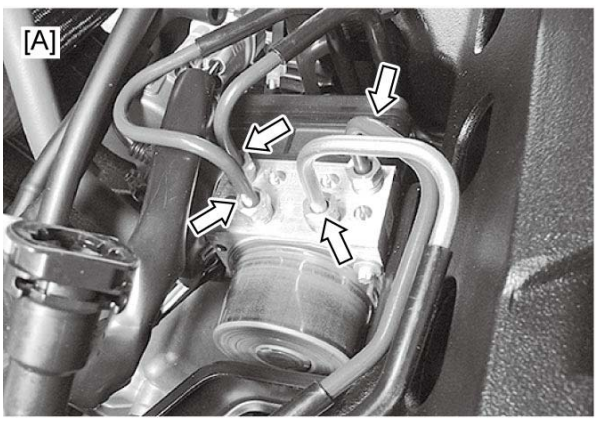

[A]:	With ABS



3) Install the removed parts.

Brake Pedal Height Inspection and Adjustment

1) Inspect the brake pedal height “a” between the pedal top face and footrest. Adjust the brake pedal height if necessary.

Brake pedal height “a”

[Standard]: 50 – 60 mm (2.0 – 2.3 in)

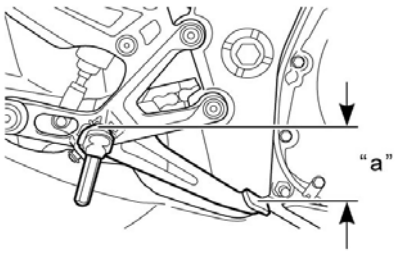

2) Loosen the lock-nut (1).

3) Turn the push rod (2) in or out until the brake pedal height is within the specification.

4) Tighten the lock-nut (1) to the specified torque.

Tightening torque

Rear brake master cylinder rod lock-nut (a): 18 N·m (1.8 kgf-m, 13.5 lbf-ft)

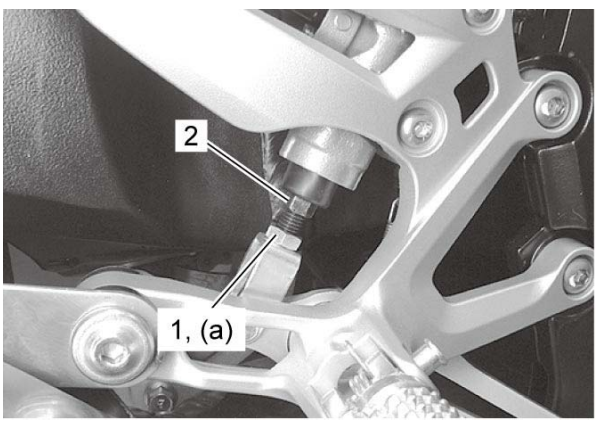

5) After finishing the brake pedal height inspection and adjustment, check the rear brake light switch. ☞

Front Brake Hose Removal and Installation

Refer to ***Front Brake Hose Routing Diagram***.

Removal

1) Drain brake fluid. ☞

2) Remove the air cleaner box. ☞

3) Remove the front brake hoses.

Installation

1) Install the front brake hoses.

2) Install the air cleaner box. ☞

3) Bleed air from the front brake system. ☞

Front Brake Hose Routing Diagram

Without ABS

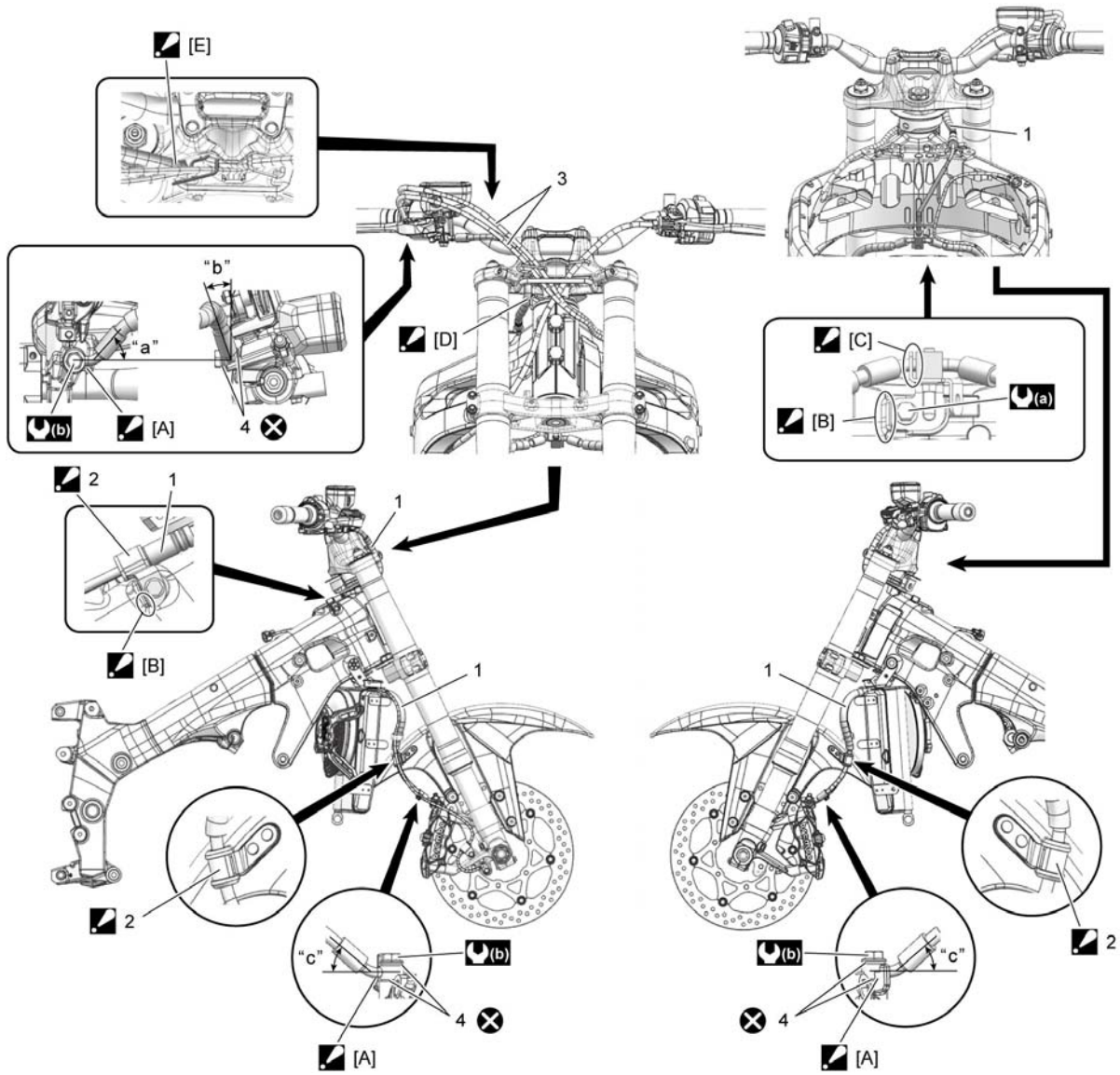

[A]:	After the brake hose union has contacted the stopper, tighten the union bolt to the specified torque.	4.	Seal washer
[B]:	After the clamp has contacted the stopper of frame head, tighten the bolt.	"a":	49°
[C]:	After the brake hose joint has contacted the stopper, tighten the bolt.	"b":	14°
[D]:	Pass the brake hose into the meter brace.	"c":	40°

[E]:	Pass the brake hose behind the cable guide and throttle cable.	(a):	11 N·m (1.1 kgf-m, 8.5 lbf-ft)
1.	Front brake hose	(b):	23 N·m (2.3 kgf-m, 17.0 lbf-ft)
2.	Front brake hose clamp : Fix the hose sleeve to the front brake hose clamp firmly.	:	Do not reuse.
3.	Throttle cable		

With ABS

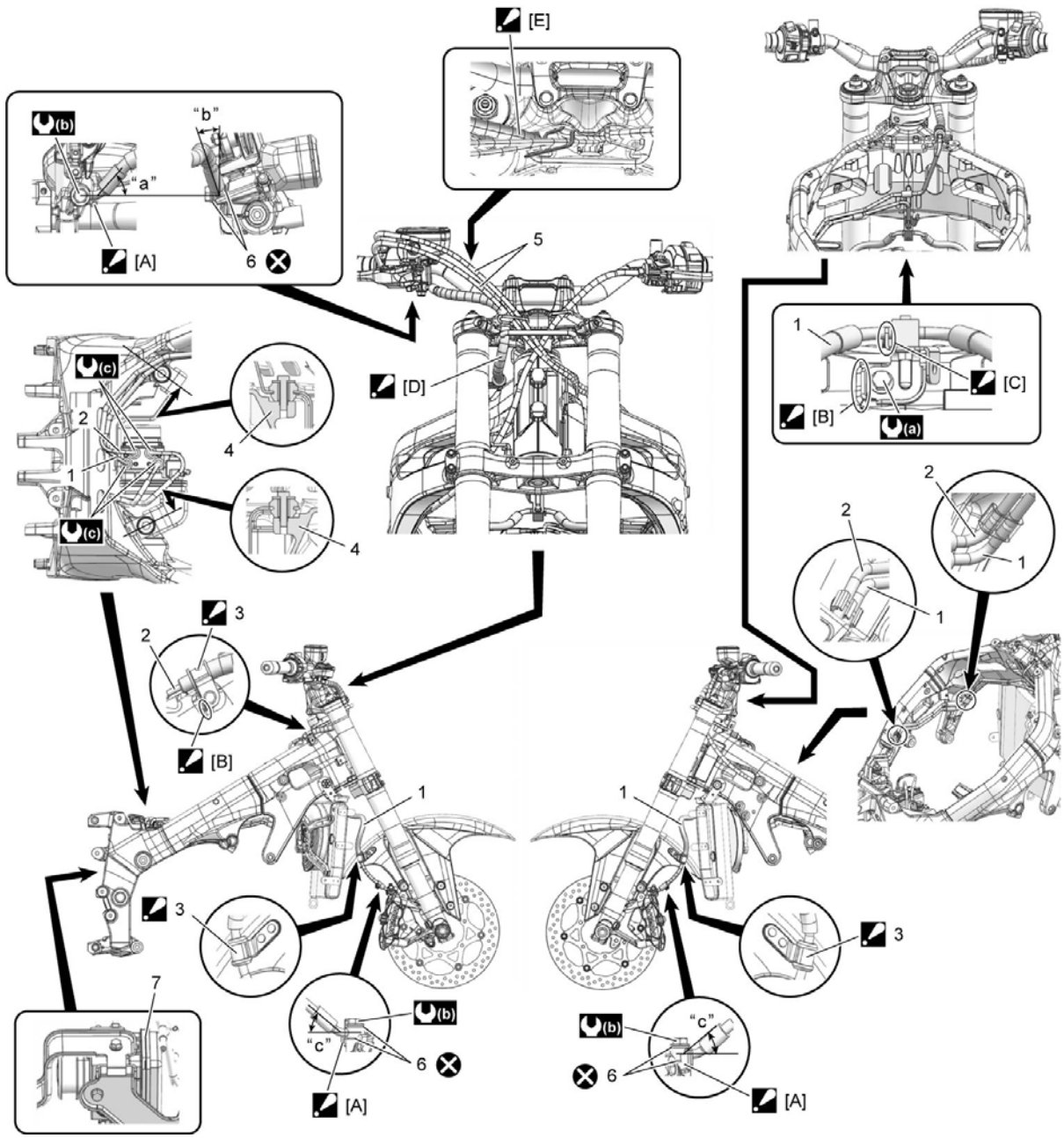

[A]:	After the brake hose union has contacted the stopper, tighten the union	6.	Seal washer
[B]:	After the clamp has contacted the stopper of frame head, tighten the bolt.	7.	ABS control unit/HU
[C]:	After the brake hose joint has contacted the stopper, tighten the bolt.	“a”:	49°
[D]:	Pass the brake hose into the meter brace.	“b”:	14°
[E]:	Pass the brake hose behind the cable guide and throttle cable.	“c”:	40°
1.	Front brake hose : ABS control unit/HU to front brake caliper.	(a):	11 N·m (1.1 kgf-m, 8.5 lbf-ft)
2.	Front brake hose : Front brake master cylinder to ABS control unit/HU.	(b):	23 N·m (2.3 kgf-m, 17.0 lbf-ft)
3.	Front brake hose clamp : Fix the hose sleeve to the front brake hose clamp firmly.	(c):	16 N·m (1.6 kgf-m, 12.0 lbf-ft)
4.	Frame	:	Do not reuse.
5.	Throttle cable		

Front Brake Light Switch Inspection

1) Grasp the front brake lever, remove the front brake light switch (1).

2) Disconnect the front brake light switch lead wire coupler (2).

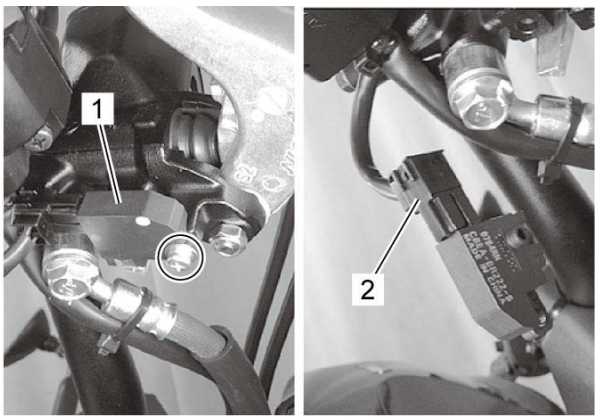

3) Inspect the switch for continuity with a circuit tester.
If any abnormality is found, replace the front brake light switch with a new one.

Color / Position	Terminal (B/R)	Terminal (B/Bl)
OFF		
ON	○———	———○

4) Connect the front brake light switch lead wire coupler (1).

5) When installing the brake light switch, align the projection (2) on the switch with the hole (3) in the master cylinder.

6) Tighten the brake light switch screw to the specified torque.

Tightening torque

Brake light switch screw: 1.2 N·m (0.12 kgf-m, 0.90 lbf-ft)

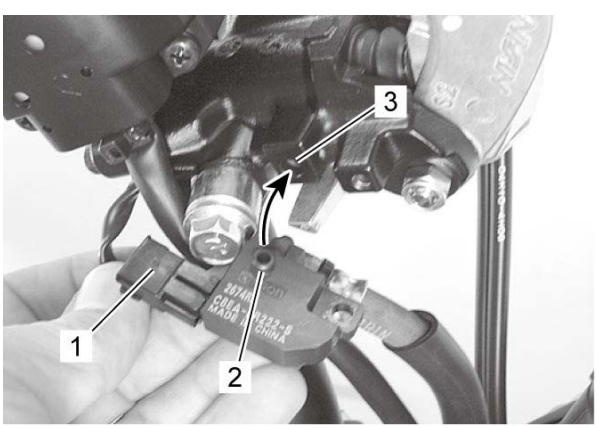



Front Brake Master Cylinder Assembly / Brake Lever Components

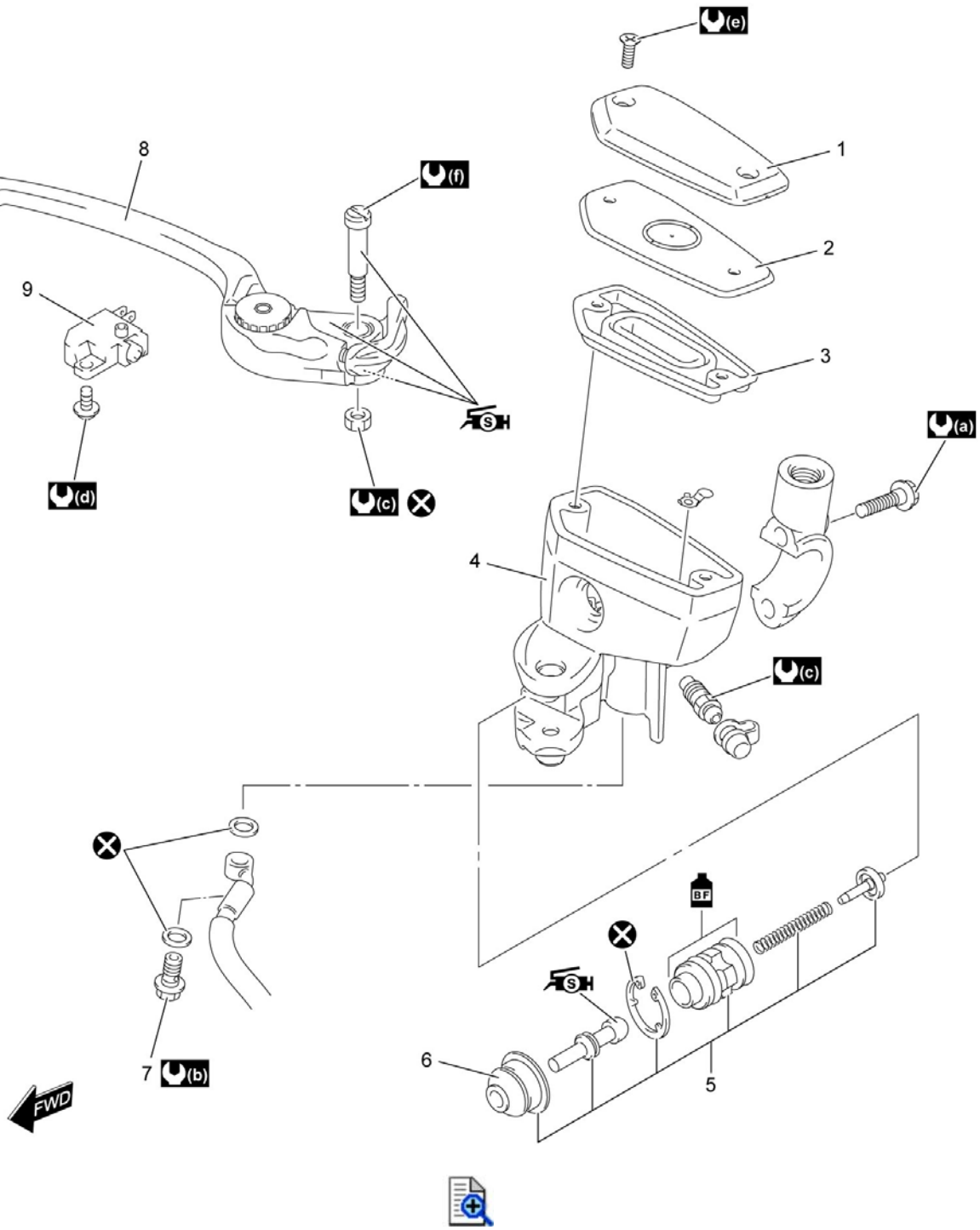

1.	Reservoir cap	7.	Brake hose union bolt	(d)	1.2 N·m (0.12 kgf-m, 0.90 lbf-ft)
2.	Plate	8.	Brake lever	(e)	1.5 N·m (0.15 kgf-m, 1.10 lbf-ft)

3.	Diaphragm	9.	Brake light switch	(f):	1 N·m (0.10 kgf-m, 0.75 lbf-ft)
4.	Master cylinder	(a):	10 N·m (1.0 kgf-m, 7.5 lbf-ft)	(S):	Apply silicone grease.
5.	Piston/Cup set	(b):	23 N·m (2.3 kgf-m, 17.0 lbf-ft)	BF:	Apply brake fluid.
6.	Dust boot	(c):	6 N·m (0.61 kgf-m, 4.45 lbf-ft)	:	Do not reuse.

Front Brake Master Cylinder Assembly / Brake Lever Disassembly and Reassembly

Refer to ***Front Brake Master Cylinder Assembly Removal and Installation***.
Reference: Front Brake Master Cylinder Assembly / Brake Lever Components

Disassembly

1) Remove the reservoir cap (1), plate (2) and diaphragm (3).

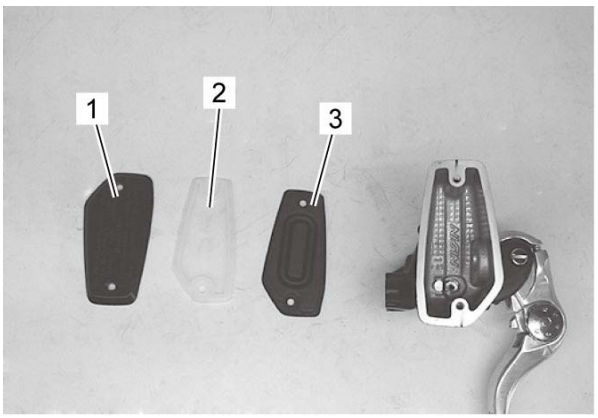

2) Remove the brake lever (1) and brake light switch (2).

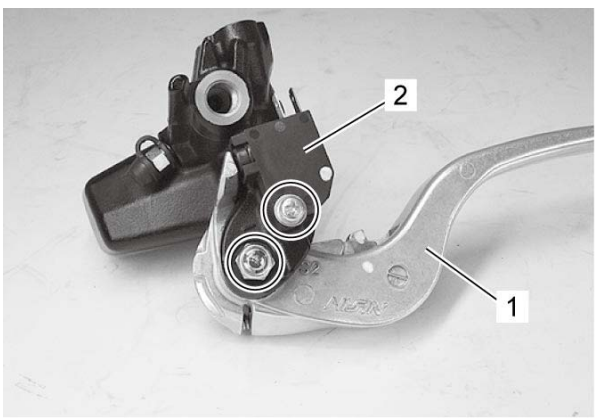

3) Remove the dust boot (1) and push rod (2).
4) Remove the snap ring (3) with the special tool.

Special Tool
09900–06108

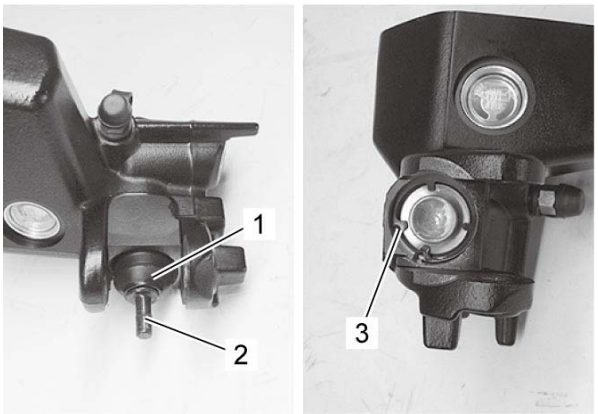

5) Remove the following parts from the master cylinder.
- Piston/cup set (1)
- Return spring (2)
- Return spring guide (3)

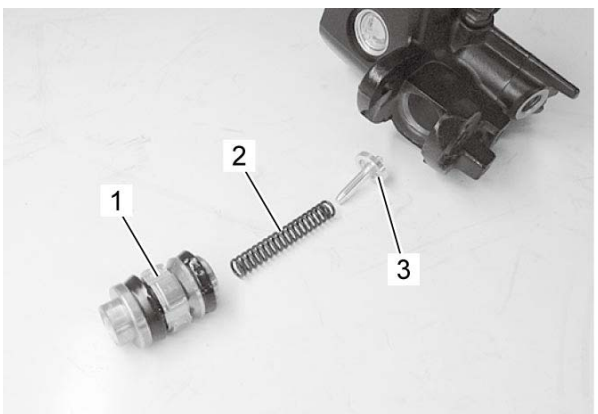

Reassembly

Reference: Front Brake Master Cylinder Parts Inspection

Reassemble the front brake master cylinder and brake lever in the reverse order of disassembly. Pay attention to the following points:

NOTICE:
- **Wash the master cylinder components with new brake fluid before reassembly.**
- **Do not wipe the brake fluid off after washing the components.**
- **When washing the components, use the specified brake fluid. Never use different types of fluid or cleaning solvents such as gasoline, kerosine, etc.**
- **Apply brake fluid to the master cylinder bore and all of the master cylinder component to be inserted into the bore.**

Brake fluid (DOT 4)

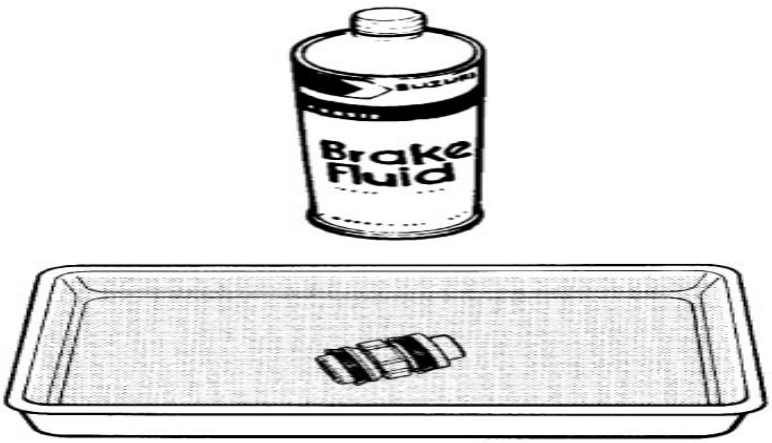

- When installing the return spring guide, fit the spring guide end (1) into the hole (2) of the master cylinder.

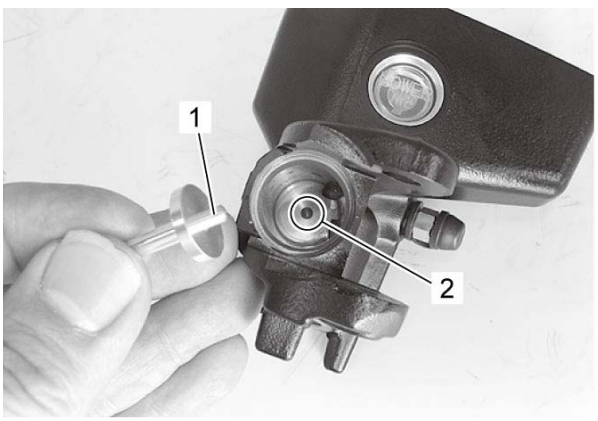

- Install the new snap ring (1) with the special tool.

Special Tool
09900–06108



- Apply grease to the push rod end.

  “A”: Grease 99000–25100 (SUZUKI SILICONE GREASE)
- Set the dust boot (1) to the master cylinder securely.

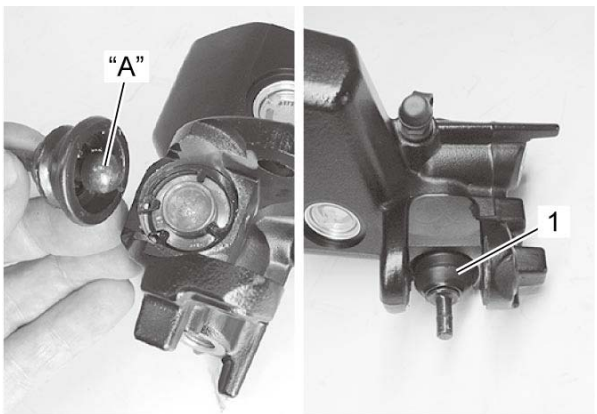

- When installing the brake light switch, align the projection (1) on the switch with the hole (2) in the master cylinder.
- Tighten the brake light switch mounting screw (3) to the specified torque.

Tightening torque

Brake light switch screw (a): 1.2 N·m (0.12 kgf-m, 0.90 lbf-ft)

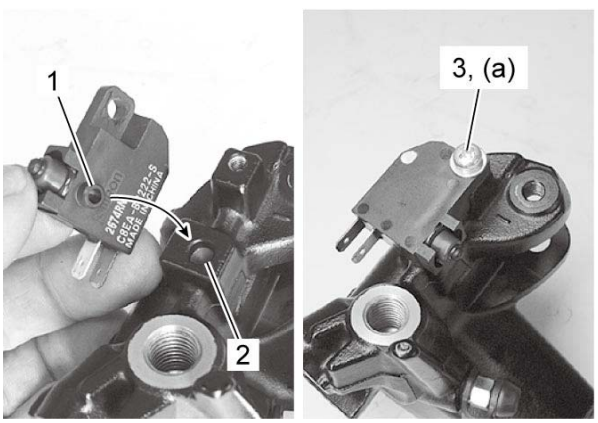

- Apply grease to the contact point between push rod and brake lever.
- Apply grease to the brake lever pivot bolt and brake lever sliding surfaces.

  “A”: Grease 99000–25100 (SUZUKI SILICONE GREASE)

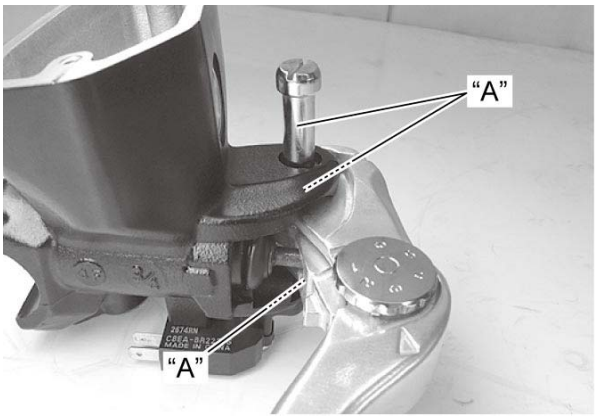

- Tighten the pivot bolt (1) and new lock-nut (2) to the specified torque.

Tightening torque

Brake lever pivot bolt (a): 1 N·m (0.10 kgf-m, 0.75 lbf-ft)
Brake lever pivot bolt lock-nut (b): 6 N·m (0.61 kgf-m, 4.45 lbf-ft)

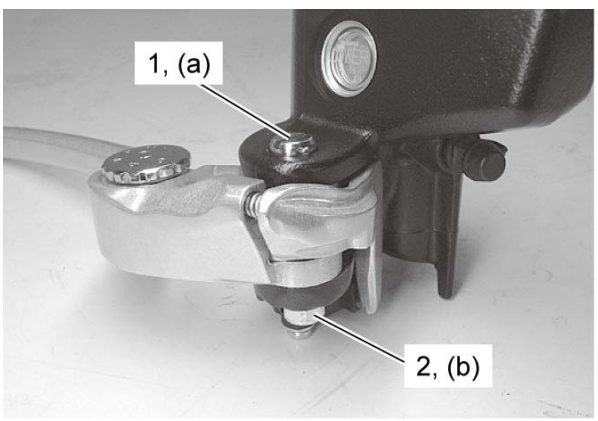

Front Brake Master Cylinder Assembly Removal and Installation

Reference: Front Brake Master Cylinder Assembly / Brake Lever Components

Removal

1) Drain brake fluid. ☞

2) Place a rag underneath the brake hose union bolt (1) on the master cylinder to catch any spilt brake fluid.

3) Remove the brake hose union bolt (1) and disconnect the brake hose.

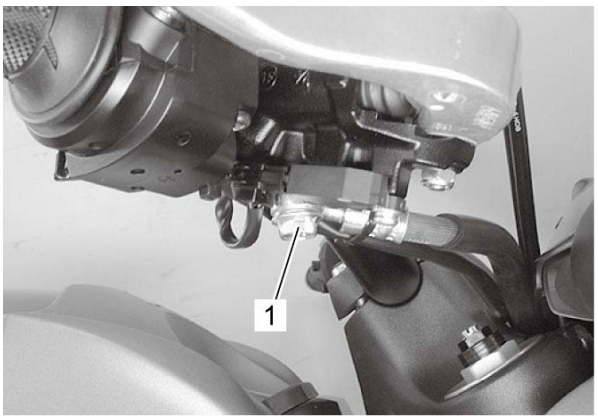

4) Remove the right rear view mirror (1).

5) Remove the master cylinder holder (2).

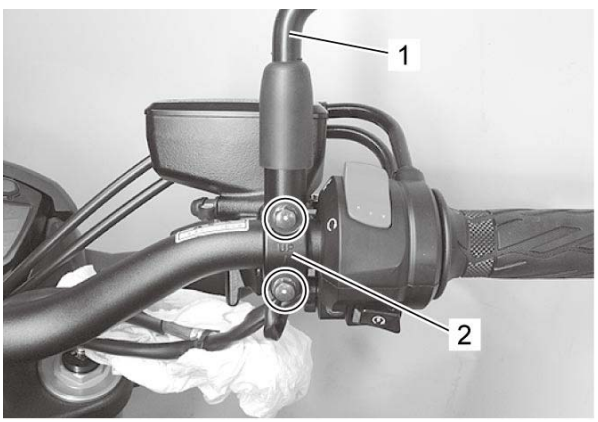

6) Disconnect the front brake light switch lead wire coupler (1) and master cylinder assembly (2).

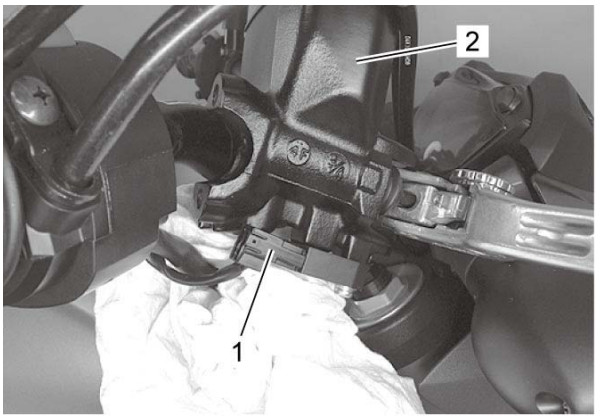

Installation

Reference: Front Brake Hose Routing Diagram

Install the front brake master cylinder in the reverse order of removal. Pay attention to the following points:

- When installing the master cylinder assembly (1) onto the handlebars (2), align the edge (3) of master cylinder with the punch mark (4) on the handlebars (2) and tighten the upper bolt (5) first.

NOTE:
Face the up mark (6) upward.

Tightening torque

Front brake master cylinder holder bolt (a): 10 N·m (1.0 kgf-m, 7.5 lbf-ft)

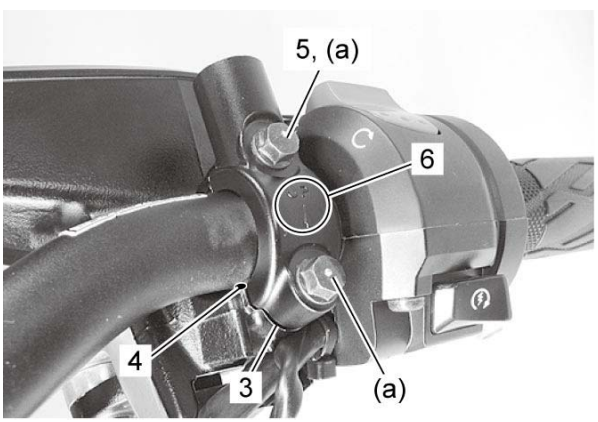

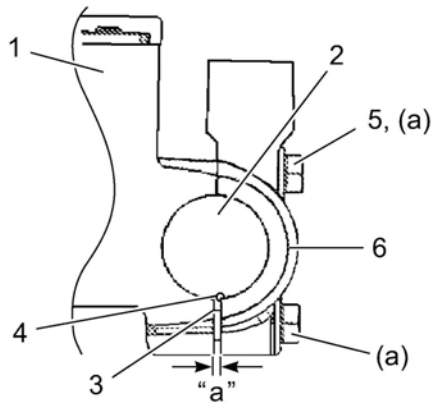

“a”:	Clearance

- Install the brake hose union bolt and new seal washers to brake hose.
- After the brake hose union has contacted the stopper, tighten the union bolt (1) to the specified torque.

Tightening torque

Brake hose union bolt (a): 23 N·m (2.3 kgf-m, 17.0 lbf-ft)

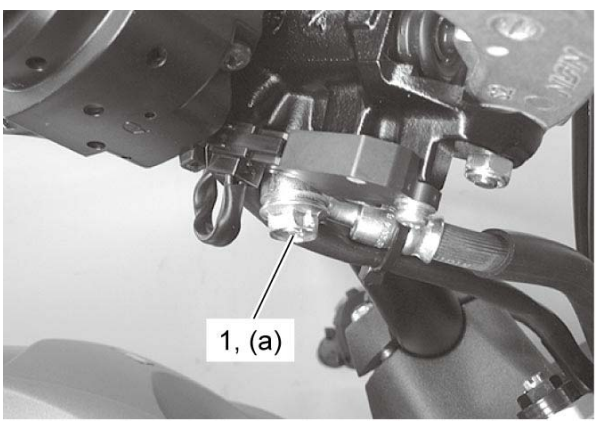

- Bleed air from the brake system. ☞

Front Brake Master Cylinder Parts Inspection

Refer to ***Front Brake Master Cylinder Assembly / Brake Lever Disassembly and Reassembly***.

Master Cylinder

Inspect the master cylinder bore (1) for any scratches corrosion or other damage. If any damage is found, replace it with a new one.

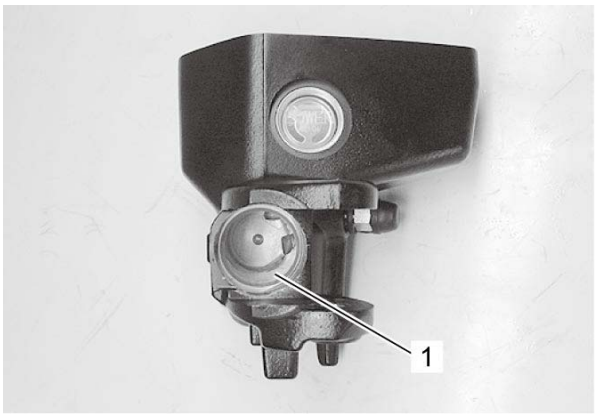

Piston / Cup Set

Inspect the piston/cup set surface for any scratches or other damage. Inspect the primary cup (1) and secondary cup (2) for wear or damage. If any damage is found, replace the piston/cup with new one.

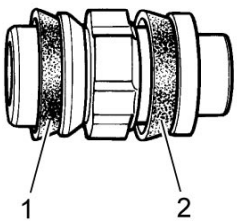

Rear Brake Hose Removal and Installation

Refer to ***Rear Brake Hose Routing Diagram***.

Removal

1) Remove the front seat. ☞

2) For ABS model, lift and support the fuel tank. ☞

3) Drain brake fluid. ☞

4) Remove the rear brake hoses.

Installation

1) Install the rear brake hoses.

2) Bleed air from the rear brake system. ☞

3) Install the removed parts.

Rear Brake Hose Routing Diagram

Without ABS

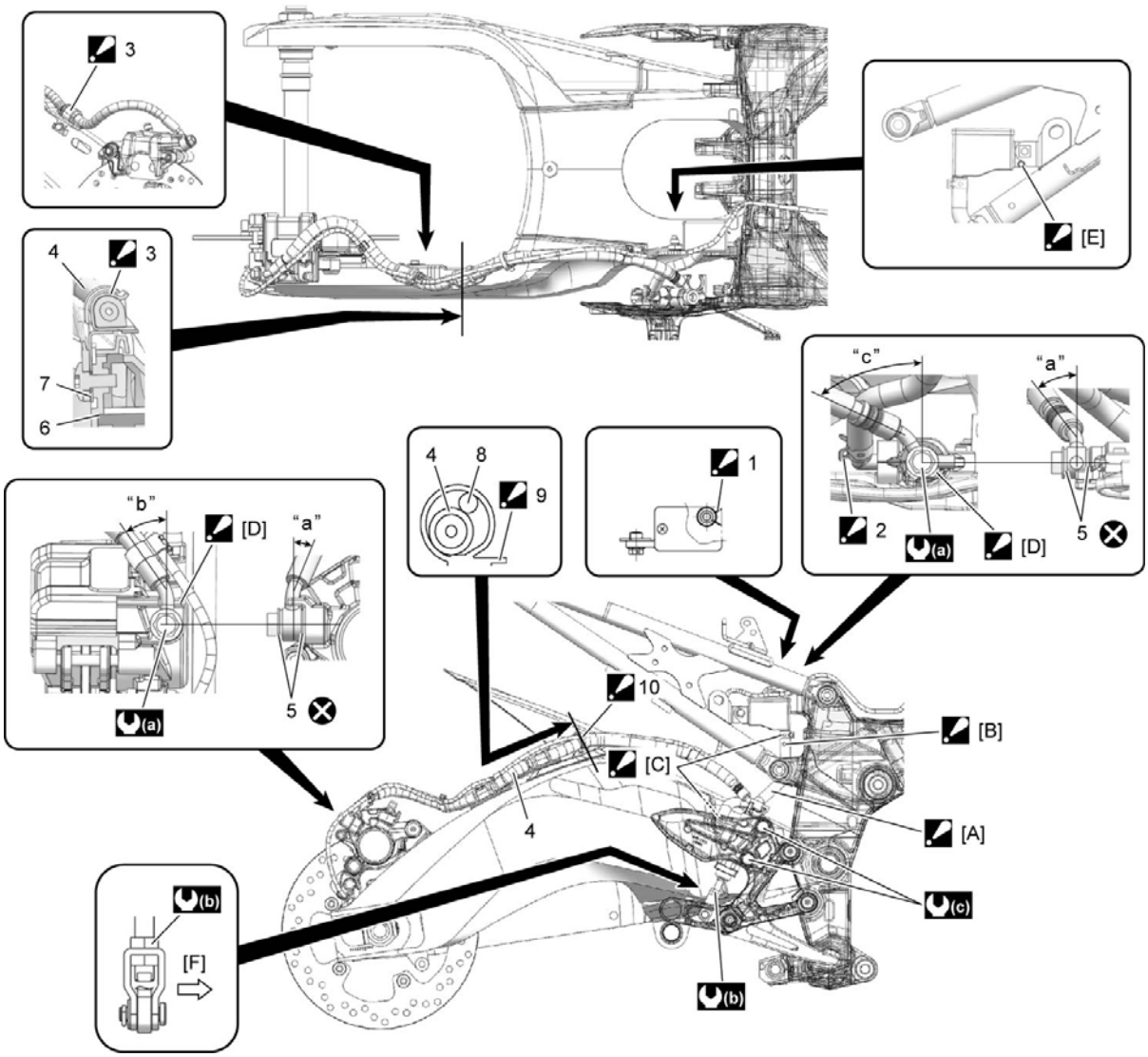

[A]:	Pass the reservoir hose to inside of the seat rail.	7.	Rear fender lower
[B]:	Face the white paint making to outside.	8.	Rear wheel speed sensor lead wire
[C]:	Insert the reservoir hose firmly.	9.	Clamp : Cut off the excess tip of the clamp within 5 mm (0.2 in).
[D]:	After the brake hose union has contacted the stopper, tighten the union bolt to the specified torque.	10.	Clamp : Insert the clamp firmly.

[E]:	After the stopper of rear brake reservoir tank has contacted the bracket of seat rail, tighten the bolt.	“a”:	21°
[F]:	Outside	“b”:	42°
1.	Reservoir tank hose clamp : Reservoir tank hose clamp ends should face front side.	“c”:	65°
2.	Reservoir tank hose clamp : Reservoir tank hose clamp ends should face backward.	(a):	23 N·m (2.3 kgf-m, 17.0 lbf-ft)
3.	Rear brake hose clamp : Fix the hose sleeve to the rear brake hose clamp firmly.	(b):	18 N·m (1.8 kgf-m, 13.5 lbf-ft)
4.	Brake hose	(c):	10 N·m (1.0 kgf-m, 7.5 lbf-ft)
5.	Seal washer	:	Do not reuse.
6.	Swingarm		

With ABS

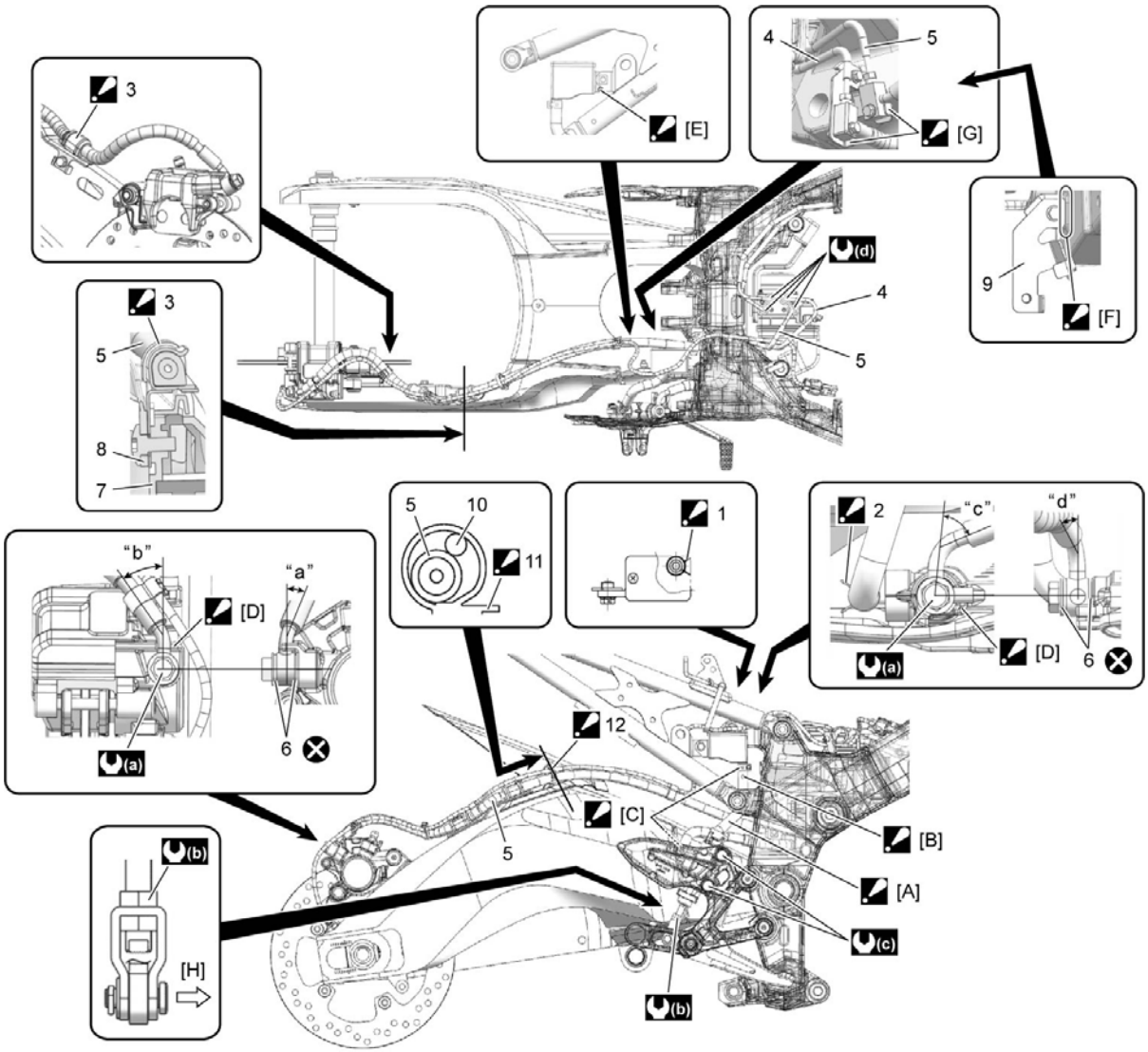

[A]:	Pass the reservoir hose to inside of the seat rail.	8.	Rear fender lower
[B]:	Face the white paint making to outside.	9.	Brake hose clamp
[C]:	Insert the reservoir hose firmly.	10.	Rear wheel speed sensor lead wire
[D]:	After the brake hose union has contacted the stopper, tighten the union bolt to the specified torque.	11.	Clamp : Cut off the excess tip of the clamp within 5 mm (0.2 in).
[E]:	After the stopper of rear brake reservoir tank has contacted the bracket of seat rail, tighten the bolt.	12.	Clamp : Insert the clamp firmly.
[F]:	After the brake hose clamp has contacted the stopper of frame, tighten the bolt.	"a":	20°
[G]:	After the brake hose joint has contacted the stopper, tighten the bolt.	"b":	40°

[H]:	Outside	“c”:	70°
1.	Reservoir tank hose clamp : Reservoir tank hose clamp ends should face front side.	“d”:	14°
2.	Reservoir tank hose clamp : Reservoir tank hose clamp ends should face backward.	(a):	23 N·m (2.3 kgf-m, 17.0 lbf-ft)
3.	Rear brake hose clamp : Fix the hose sleeve to the rear brake hose clamp firmly.	(b):	18 N·m (1.8 kgf-m, 13.5 lbf-ft)
4.	Rear brake hose : Rear brake master cylinder to ABS control unit/HU.	(c):	10 N·m (1.0 kgf-m, 7.5 lbf-ft)
5.	Rear brake hose : ABS control unit/HU to rear brake caliper.	(d):	16 N·m (1.6 kgf-m, 12.0 lbf-ft)
6.	Seal washer	:	Do not reuse.
7.	Swingarm		

Rear Brake Light Switch Inspection and Adjustment

Check the rear brake light switch so that the brake light will come on just before pressure is felt when the brake pedal is depressed. If the brake light switch adjustment is necessary, turn the adjuster nut (1) in or out while holding the brake pedal.

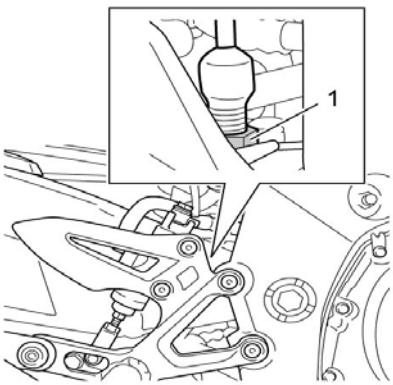

Rear Brake Light Switch Inspection

1) Lift and support the fuel tank. ☞

2) Disconnect the rear brake light switch lead wire coupler (1).

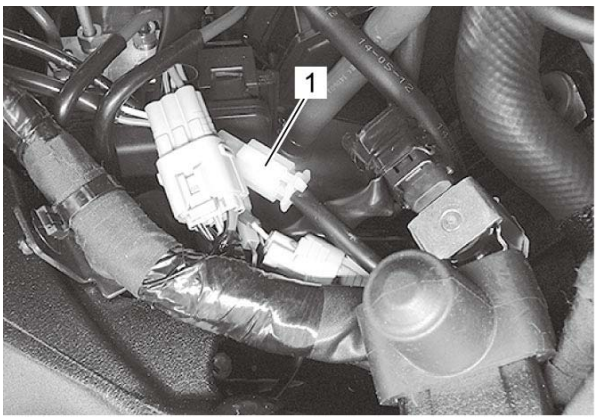

3) Inspect the switch for continuity with a tester.
If any abnormality is found, replace the rear brake light switch with a new one.

Color / Position	Terminal (O)	Terminal (W/B)
OFF		
ON	○———	———○

4) Connect the rear brake light switch lead wire coupler.

5) Install the fuel tank. ☞

Rear Brake Master Cylinder Assembly Components

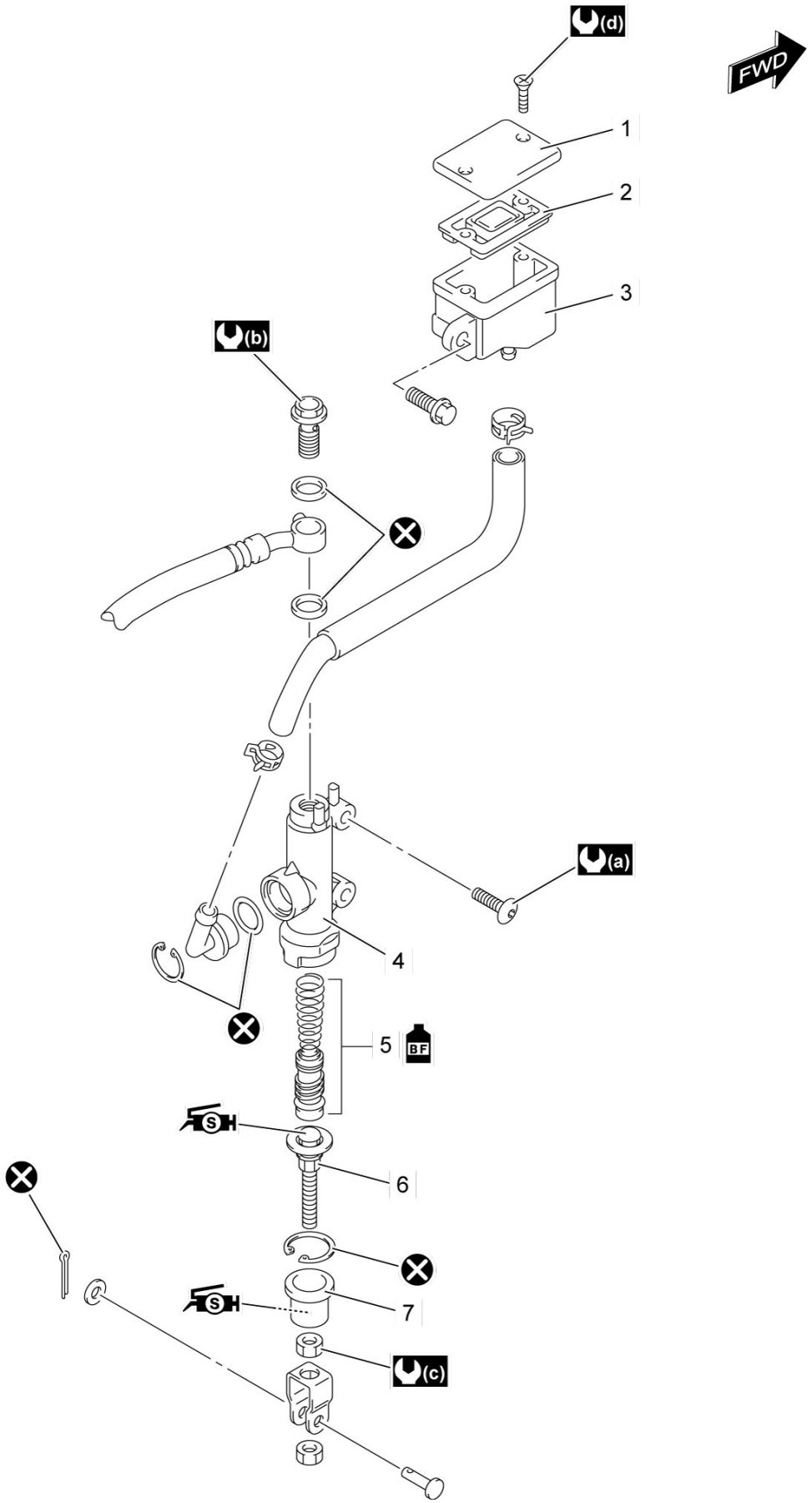
(d)
FWD
1
2
3
(b)
(a)
4
5
BF
6
7
(c)

1.	Reservoir cap	6.	Push rod	(d):	1.2 N·m (0.12 kgf-m, 0.90 lbf-ft)
2.	Diaphragm	7.	Dust boot	(S):	Apply silicone grease.
3.	Reservoir tank	(a):	10 N·m (1.0 kgf-m, 7.5 lbf-ft)	BF:	Apply brake fluid.
4.	Master cylinder	(b):	23 N·m (2.3 kgf-m, 17.0 lbf-ft)	:	Do not reuse.
5.	Piston/Cup set	(c):	18 N·m (1.8 kgf-m, 13.5 lbf-ft)		

Rear Brake Master Cylinder Assembly Removal and Installation

Reference: Rear Brake Master Cylinder Assembly Components

Removal

1) Remove the right frame rear upper cover. ☞

2) Drain brake fluid. ☞

3) Remove the reservoir tank mounting bolt (1).

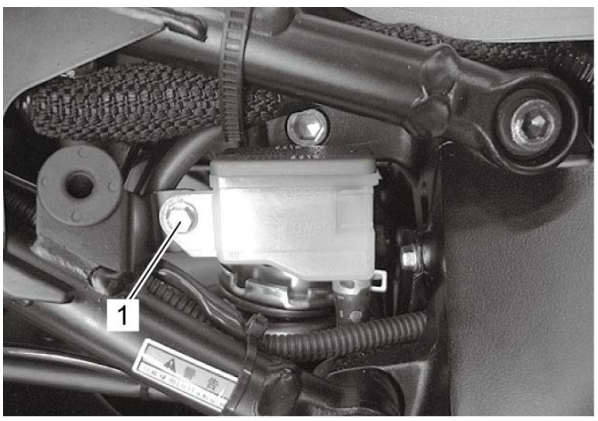

4) Place a clean rag underneath the brake hose union bolt (1) on the master cylinder to catch any spilt brake fluid.

5) Remove the brake hose union bolt (1) and disconnect the brake hose.

6) Loosen the lock-nut (2).

7) Remove the master cylinder mounting bolts (3).

8) Remove the master cylinder with the reservoir by turning the push rod (4).

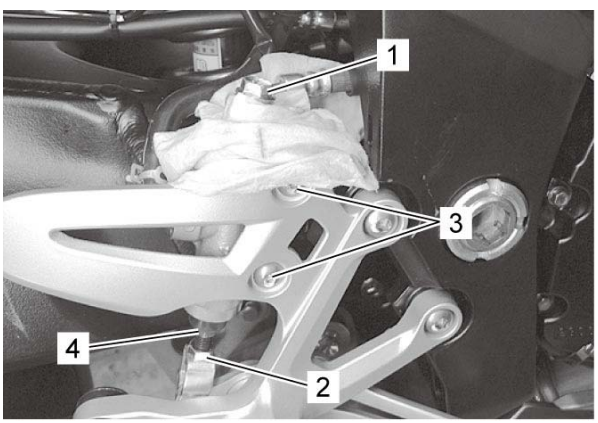

Installation

Reference: Rear Brake Hose Routing Diagram

Install the rear brake master cylinder in the reverse order of removal. Pay attention to the following

points:

- Tighten the master cylinder mounting bolts (1) to the specified torque.

Tightening torque

Rear brake master cylinder mounting bolt (a): 10 N·m (1.0 kgf-m, 7.5 lbf-ft)

- Tighten the lock-nut (2) to the specified torque.

Tightening torque

Rear brake master cylinder rod lock-nut (b): 18 N·m (1.8 kgf-m, 13.5 lbf-ft)

- Install the brake hose union bolt and new seal washers to the brake hose.
- After the brake hose union has contacted the stopper, tighten the union bolt (3) to the specified torque.

Tightening torque

Brake hose union bolt (c): 23 N·m (2.3 kgf-m, 17.0 lbf-ft)

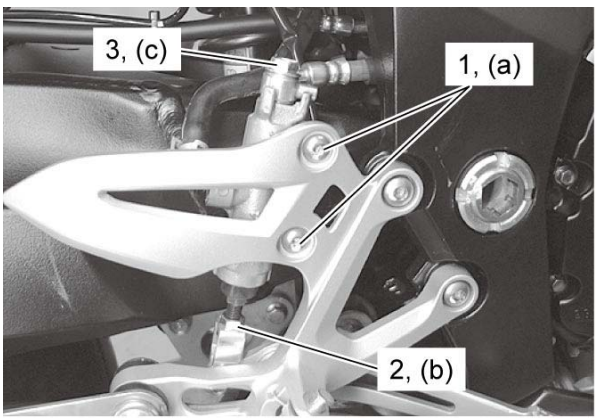

- Install the reservoir tank. Refer to ***Rear Brake Hose Routing Diagram***.
- Bleed air from the system after installing the master cylinder. ☞
- Adjust the brake pedal height. ☞

Rear Brake Master Cylinder Disassembly and Reassembly

Refer to ***Rear Brake Master Cylinder Assembly Removal and Installation***.
Reference: Rear Brake Master Cylinder Assembly Components

Disassembly

1) Disconnect the reservoir hose (1).
2) Remove the lock-nut (2).

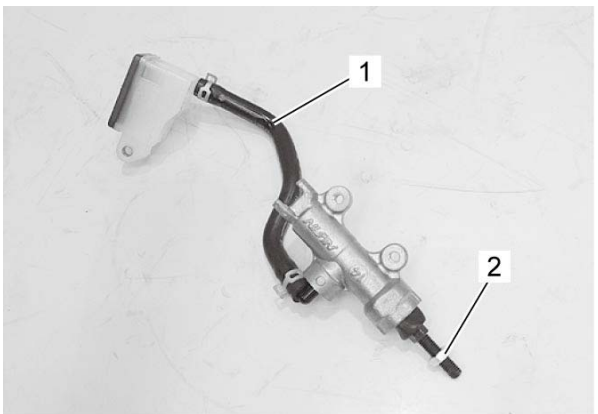

3) Remove the snap ring (1) with the special tool.

Special Tool
09900–06108

4) Remove the brake hose connector (2) and O-ring (3).

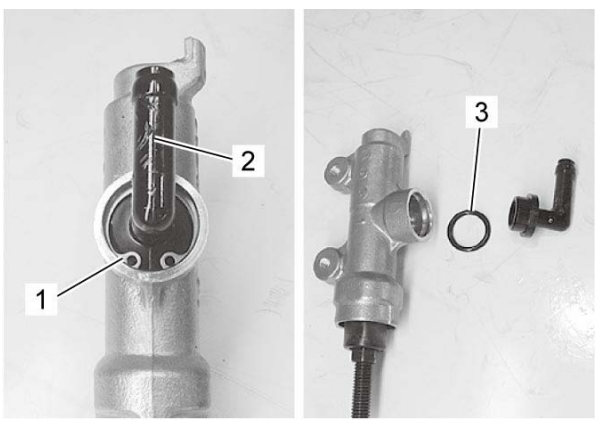

5) Pull out the dust boot (1) and remove the snap ring (2).

Special Tool
09900–06108

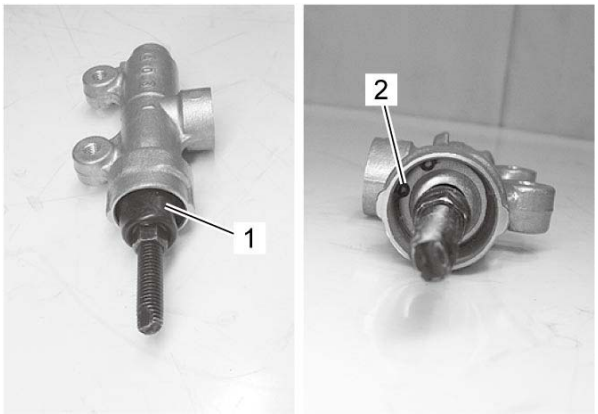

6) Remove the following parts from the master cylinder.
- Push rod (1)
- Piston/cup set (2)

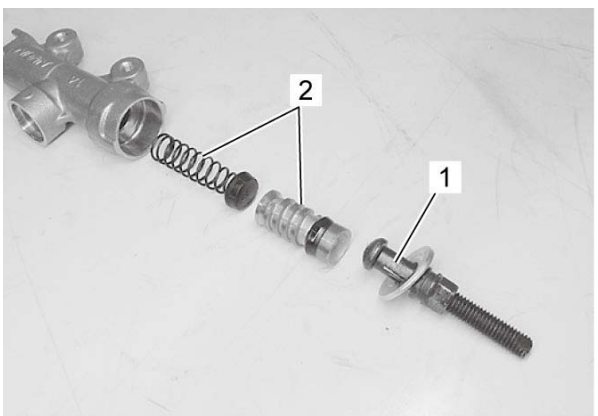

Reassembly

Reference: Rear Brake Master Cylinder Parts Inspection

Reassemble the rear brake master cylinder in the reverse order of disassembly. Pay attention to the following points:

NOTICE:
- **Wash the master cylinder components with new brake fluid before reassembly.**
- **Do not wipe the brake fluid off after washing the components.**
- **When washing the components, use the specified brake fluid. Never use different types of fluid or cleaning solvents such as gasoline, kerosine, etc.**
- **Apply brake fluid to the master cylinder bore and all of the master cylinder component to be inserted into the bore.**

Brake fluid (DOT 4)

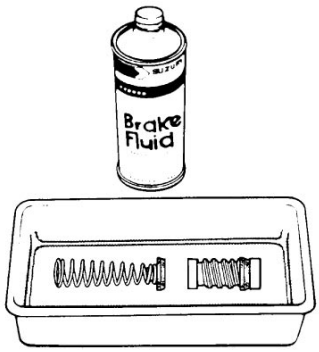

- Apply grease to the push rod end.
  "A": Grease 99000–25100 (SUZUKI SILICONE GREASE)
- Install the new snap ring (1) with the special tool.

Special Tool
09900–06108

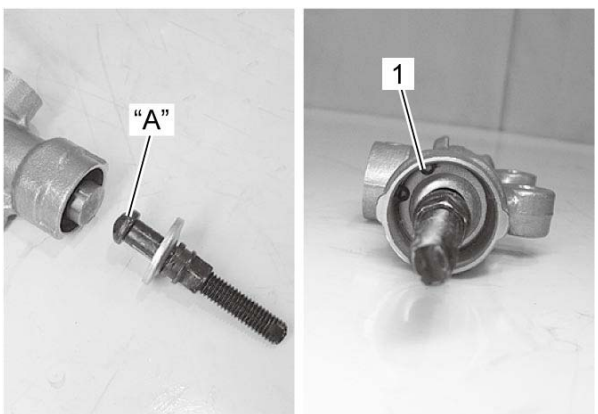

- Apply grease to the lip of the dust boot (1).
  "A": Grease 99000–25100 (SUZUKI SILICONE GREASE)
- Set the dust boot (1) to the master cylinder securely.

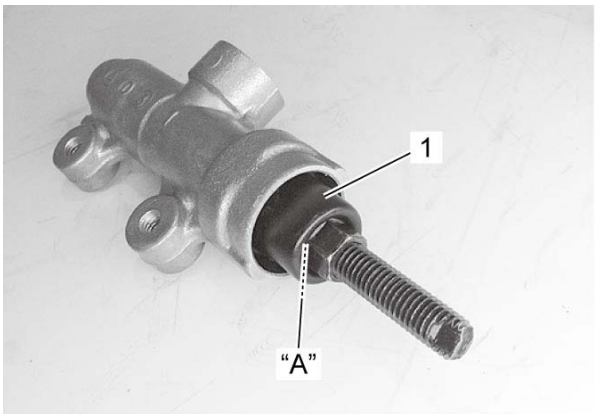

- Install the new O-ring (1) to the brake hose connector (2).
- Install the new snap ring (3) with the special tool.

Special Tool
09900–06108

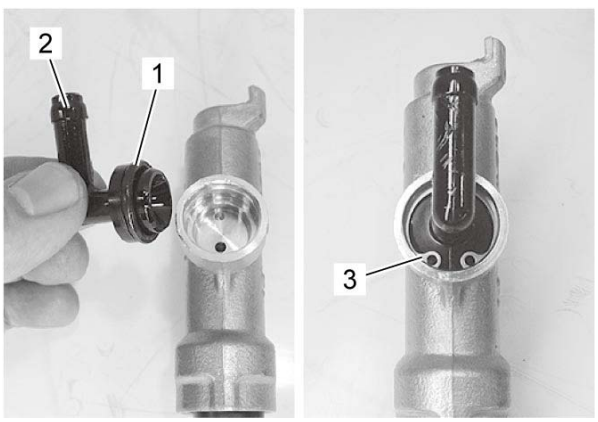

- Connect the reservoir hose (1) and set the clips (2). Refer to ***Rear Brake Hose Routing Diagram***.

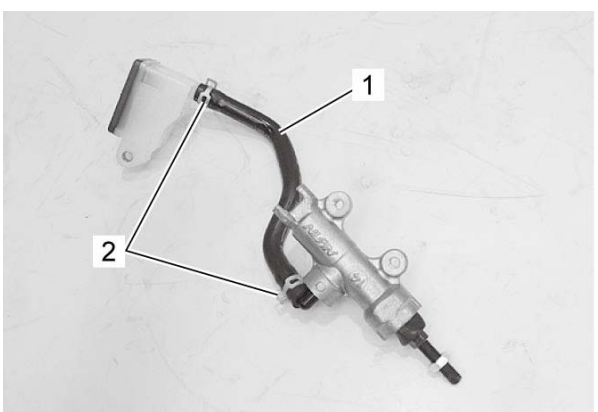



Rear Brake Master Cylinder Parts Inspection

Refer to ***Rear Brake Master Cylinder Disassembly and Reassembly***.

Master Cylinder

Inspect the master cylinder bore (1) for any scratches or other damage. If any damage is found, replace the master cylinder with a new one.

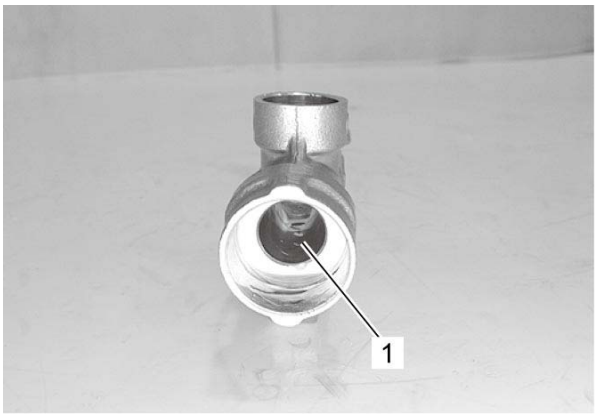

Piston / Cup Set

Inspect the piston surface for any scratches or other damage. Inspect the primary cup (1) and secondary cup (2) for wear or damage. If any damage is found, replace the piston/cup with new ones.

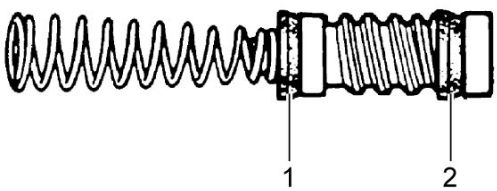

Dust Boot

Inspect the dust boot for wear or damage. If any defects are found, replace it with a new one.



Tightening Torque Specifications

Fastening part	Tightening torque			Note
	N·m	kgf-m	lbf-ft	
Brake light switch screw	1.2	0.12	0.90	☞ ☞
Rear brake master cylinder rod lock-nut	18	1.8	13.5	☞ ☞
Front brake master cylinder air bleeder valve	6	0.61	4.45	☞
Front brake air bleeder valve	7.5	0.76	5.55	☞
Front reservoir cap screw	1.5	0.15	1.10	☞
Rear brake air bleeder valve	6	0.61	4.45	☞
Rear reservoir cap screw	1.2	0.12	0.90	☞
Front brake master cylinder holder bolt	10	1.0	7.5	☞
Brake hose union bolt	23	2.3	17.0	☞ ☞
Brake lever pivot bolt	1	0.10	0.75	☞
Brake lever pivot bolt lock-nut	6	0.61	4.45	☞
Rear brake master cylinder mounting bolt	10	1.0	7.5	☞

Reference:
For the tightening torques of fasteners not specified in this page, refer to:
Front Brake Hose Routing Diagram
Rear Brake Hose Routing Diagram
Front Brake Master Cylinder Assembly / Brake Lever Components
Rear Brake Master Cylinder Assembly Components
Fasteners Information

Recommended Service Material

Material	SUZUKI recommended product or Specification		Note
Brake fluid	DOT 4	—	☞ ☞ ☞ ☞ ☞ ☞
Grease	SUZUKI SILICONE GREASE	P/No.: 99000–25100	☞ ☞ ☞ ☞

NOTE:
Required service material(s) is also described in:
Front Brake Master Cylinder Assembly / Brake Lever Components
Rear Brake Master Cylinder Assembly Components

Special Tool

09900–06108	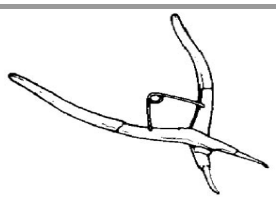		
Snap ring pliers (Internal)			
☞☞☞☞☞☞			

Front Brake Components

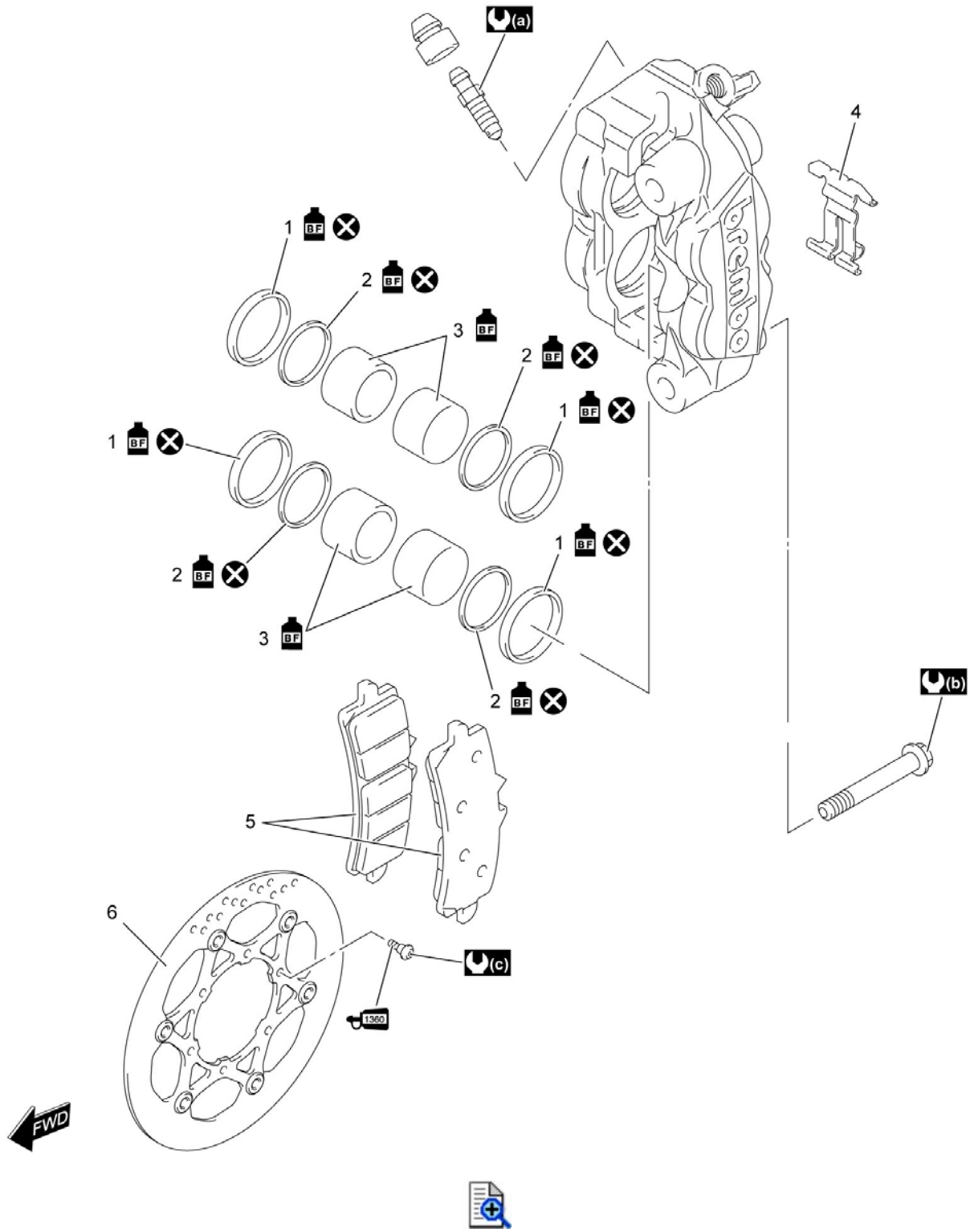

1.	Piston seal	5.	Brake pad	(c) :	18 N·m (1.8 kgf-m, 13.5 lbf-ft)
2.	Dust seal	6.	Front brake disc	1360 :	Apply thread lock to the thread part.

3.	Piston	(a):	7.5 N·m (0.76 kgf-m, 5.55 lbf-ft)	BF:	Apply brake fluid.
4.	Brake pad spring	(b):	39 N·m (4.0 kgf-m, 29.0 lbf-ft)	:	Do not reuse.

Front Brake Caliper Disassembly and Reassembly

Refer to ***Front Brake Caliper Removal and Installation***.
Reference: Front Brake Components

CAUTION:
Take care not to damage piston and caliper cylinder of front brake caliper.

NOTE:
The right and left calipers are installed symmetrically and therefore the disassembly procedure for one side is the same as that for the other side.

Disassembly

1) Remove the brake pads (1).

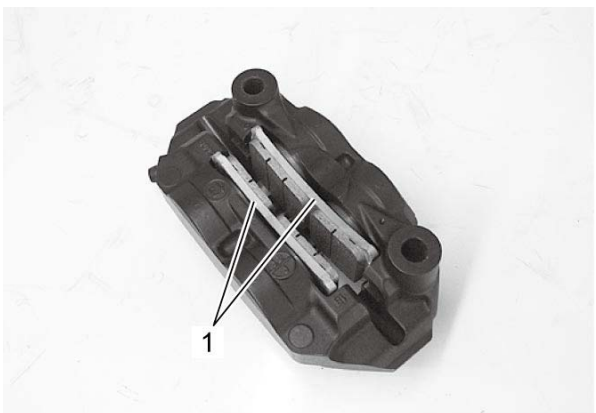

2) Remove the pad spring (1).

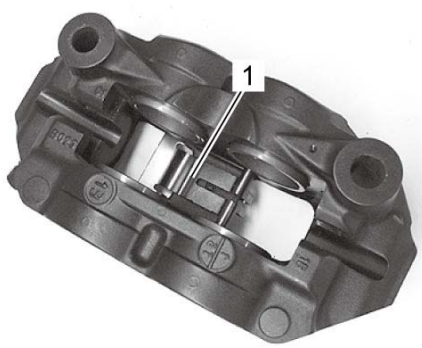

3) Remove the caliper pistons applying compressed air gradually from the hole for the brake hose.

WARNING:
Do not apply highly compressed air to the piston as it is. Place a cloth to prevent brake piston from jumping-out. Gradually apply compressed air. Do not place your fingers in front of brake piston while applying compressed air.

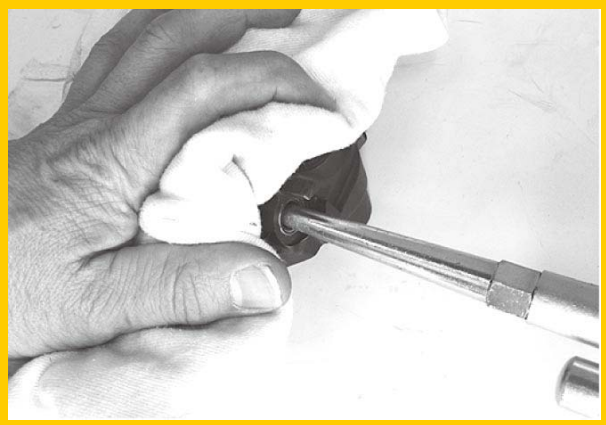

4) Remove the dust seals (1) and piston seals (2).

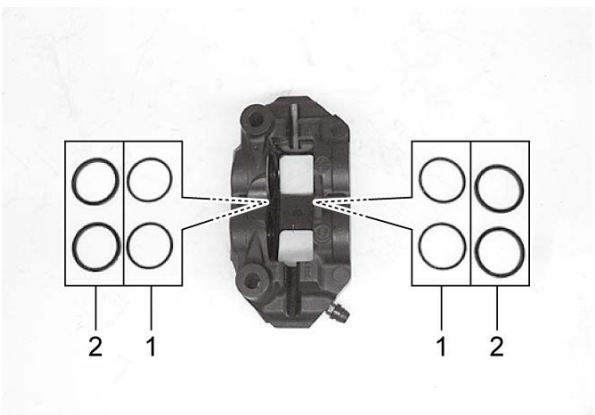

Reassembly

Reference: Front Brake Caliper Parts Inspection

Reassemble the brake caliper in the reverse order of disassembly. Pay attention to the following points:

- Wash the caliper bores and pistons with specified brake fluid. Particularly wash the dust seal grooves and piston seal grooves.

NOTICE:

- **Wash the caliper components with fresh brake fluid before reassembly. Never use cleaning solvent or gasoline to wash them.**
- **Do not wipe the brake fluid off after washing the components.**
- **When washing the components, use the specified brake fluid. Never use different types of fluid or cleaning solvent such as gasoline, kerosine or the others.**

Brake fluid (DOT 4)

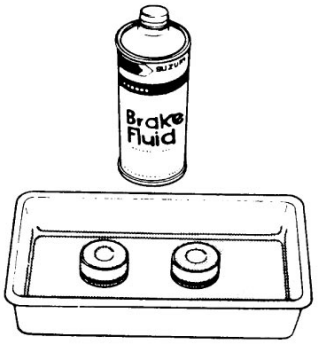

- Apply the brake fluid to new piston seals (1) and new dust seals (2).

  Brake fluid (DOT 4)
- Install the piston seals (1) and dust seals (2).

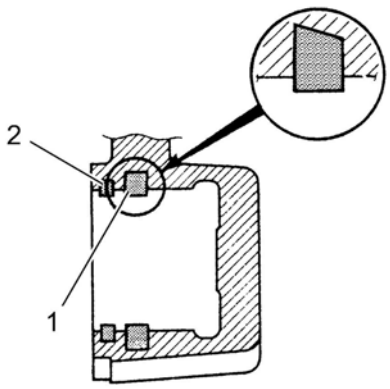

- When installing the brake pad spring, fit the brake pad spring claws to the grooves of the brake caliper.





Front Brake Caliper Parts Inspection

Refer to ***Front Brake Caliper Disassembly and Reassembly***.

Brake Caliper Cylinder

Inspect the brake caliper cylinder wall for nicks, scratches or other damage. If any damage is found, replace the caliper with a new one.



Brake Caliper Piston

Inspect the brake caliper pistons surface for any scratches or other damage. If any damage is found, replace them with new ones.



Brake Pad Spring

Inspect the brake pad spring for damage and excessive bend. If any defects are found, replace it with a new one.



Front Brake Caliper Removal and Installation

Reference: Front Brake Components

NOTE:
The right and left calipers are installed symmetrically and therefore the removal procedure for one side is the same as that for the other side.

Removal

1) Drain brake fluid. ☞

2) Place a rag underneath the union bolt on the brake caliper to catch any spilt brake fluid.

3) Remove the brake hose from the caliper by removing the union bolt (1) and catch the brake fluid in a suitable receptacle.

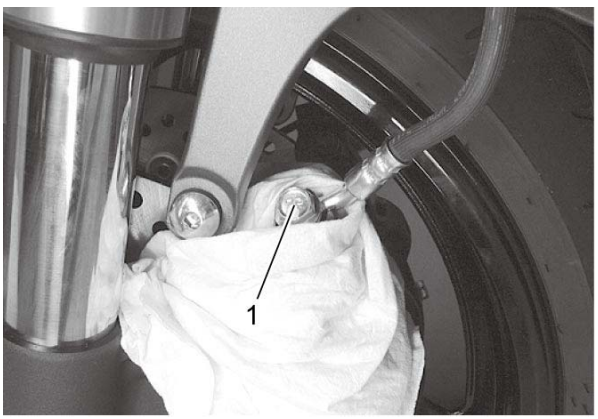

4) Remove the brake caliper (1).



Installation

1) Install the brake caliper (1).

2) Tighten caliper mounting bolts (2) to the specified torque.

Tightening torque

Front brake caliper mounting bolt (a): 39 N·m (4.0 kgf-m, 29.0 lbf-ft)

3) Install the brake hose union bolt (3) and new seal washers to brake hose.

4) After setting the brake hose union to the stopper, tighten the union bolt (3) to the specified torque.

Tightening torque

Brake hose union bolt (b): 23 N·m (2.3 kgf-m, 17.0 lbf-ft)

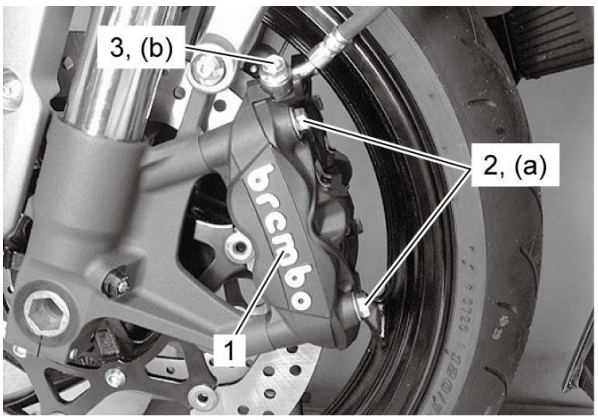

5) Bleed air from the brake system after installing the caliper. ☞

6) Check the brake fluid leakage referring to ***Brake Hose Inspection*** and brake operation.

Front Brake Disc Inspection

Brake Disc Thickness

Check the brake disc for damage or cracks and measure the thickness using the micrometer.
Replace the brake disc if the thickness is less than the service limit or if defect is found.

Front brake disc thickness

[Limit]: 4.5 mm (0.18 in)

Special Tool

(A): 09912–66310

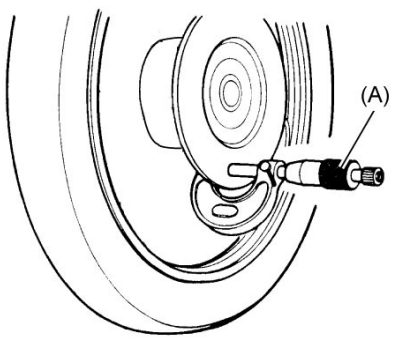

Brake Disc Runout

1) Dismount the front brake pads.
   Refer to ***Front Brake Pad Replacement***.
2) Measure the runout using the dial gauge.
   Replace the disc if the runout exceeds the service limit.

   Front brake disc runout

   [Limit]: 0.30 mm (0.012 in)

   Special Tool

   (A): 09900–20607
   09900–20701

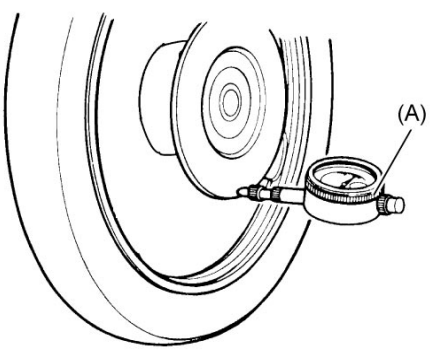

3) Remount the front brake pads.
Refer to ***Front Brake Pad Replacement***.

Front Brake Disc Removal and Installation

Refer to ***Front Wheel Assembly Removal and Installation***.
Reference: Front Brake Components

Removal

1) Remove the front brake disc (1).

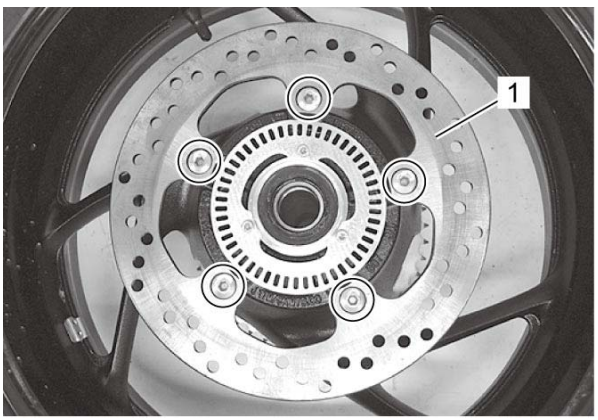

Installation

1) Make sure that the brake disc is clean and free of any grease.
2) Install the front brake disc.

> **NOTE:**
> **The stamped mark (1) on the brake disc should face to the outside.**

3) Apply thread lock to the brake disc bolts and tighten them to the specified torque.
"A": Thread lock cement 99000–32130 (THREAD LOCK CEMENT 1360)

Tightening torque
Brake disc bolt (a): 18 N·m (1.8 kgf-m, 13.5 lbf-ft)

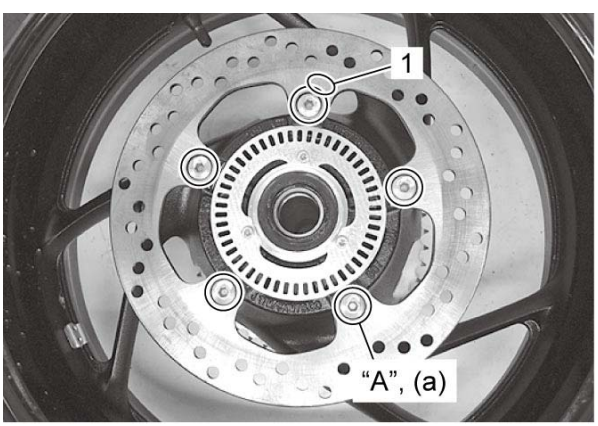

Front Brake Pad Inspection

The extent of brake pads (1) wear can be checked by observing the grooved limit line “a” on the pads. When the wear exceeds the grooved limit line, replace the pads with new ones. ☞

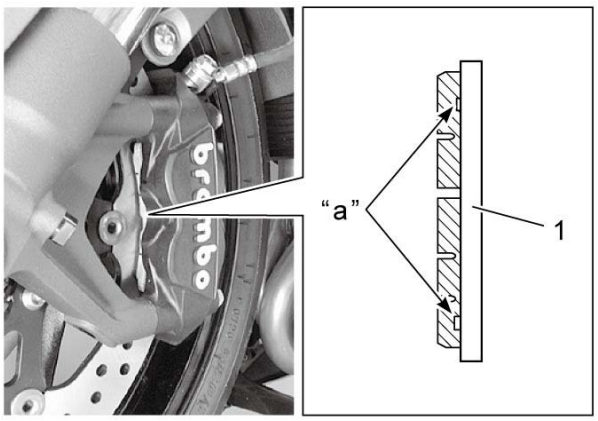

Front Brake Pad Replacement

Reference: Front Brake Components

NOTICE:
The right and left brake pads are installed symmetrically and therefore the removal procedure for one side is the same as that for the other side.

NOTE:
After replacing the brake pads, pump the brake lever several times to check for proper brake operation and then check the brake fluid level.

1) Remove the brake caliper mounting bolts (1) and brake caliper (2).

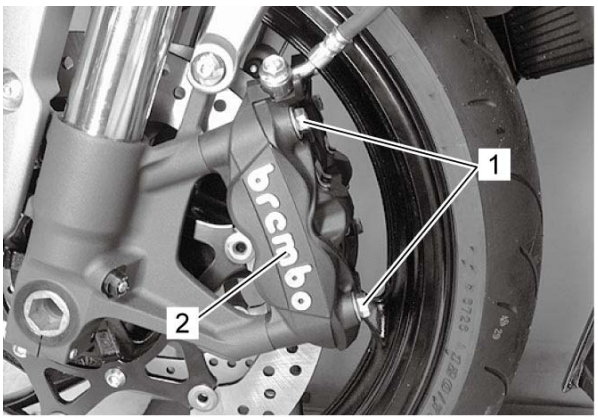

2) Remove the brake pads (1).

NOTE:
Do not operate the brake lever while removing the brake pads.

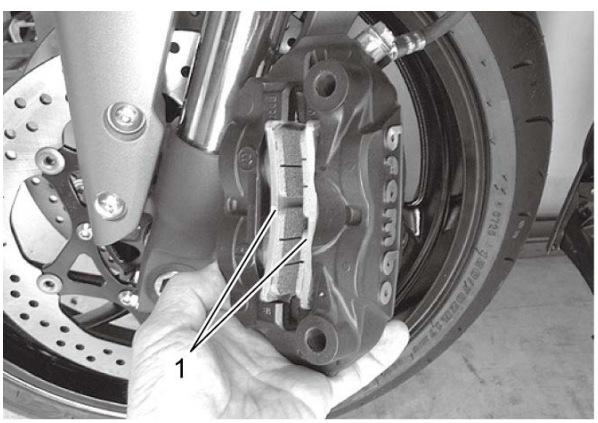

3) Clean up the caliper especially around the caliper pistons.

4) Install the new brake pads.

NOTE:

- **Replace the brake pads as a set.**
- **Pushing back the caliper pistons into the caliper will facilitate installation of the brake pads. At the time, observe the reservoir level not to exceed the upper level.**



5) Install the brake caliper (1).

6) Tighten the brake caliper mounting bolts (2) to the specified torque.

Tightening torque

Front brake caliper mounting bolt (a): 39 N·m (4.0 kgf-m, 29.0 lbf-ft)

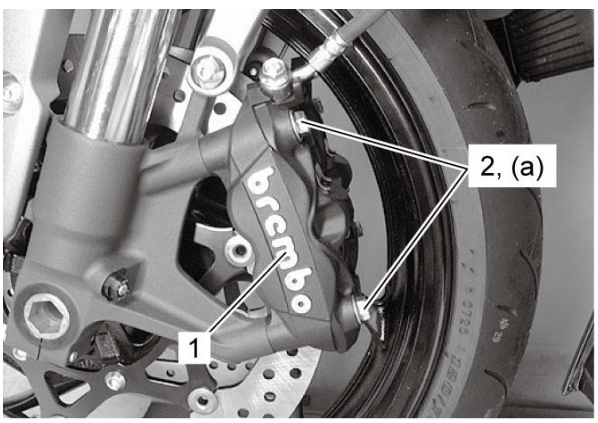

Tightening Torque Specifications

Fastening part	Tightening torque			Note
	N·m	kgf-m	lbf-ft	
Front brake caliper mounting bolt	39	4.0	29.0	☞ ☞
Brake hose union bolt	23	2.3	17.0	☞
Brake disc bolt	18	1.8	13.5	☞

Reference:
For the tightening torques of fasteners not specified in this page, refer to:
Front Brake Components
Fasteners Information

Recommended Service Material

Material	SUZUKI recommended product or Specification		Note
Brake fluid	DOT 4	—	☞ ☞
Thread lock cement	THREAD LOCK CEMENT 1360	P/No.: 99000–32130	☞

NOTE:
Required service material(s) is also described in:
Front Brake Components

Special Tool

09900–20607 Dial gauge (10 x 0.01 mm) ☞	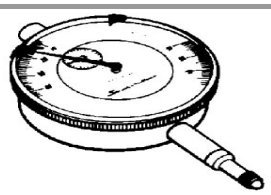	09900–20701 Dial gauge chuck ☞	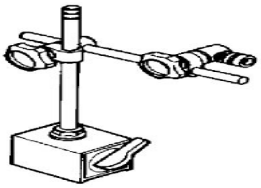
09912–66310 Micrometer (0 - 25 mm) ☞	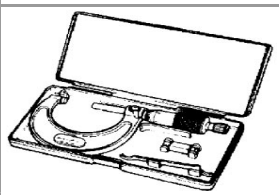		

Rear Brake Components

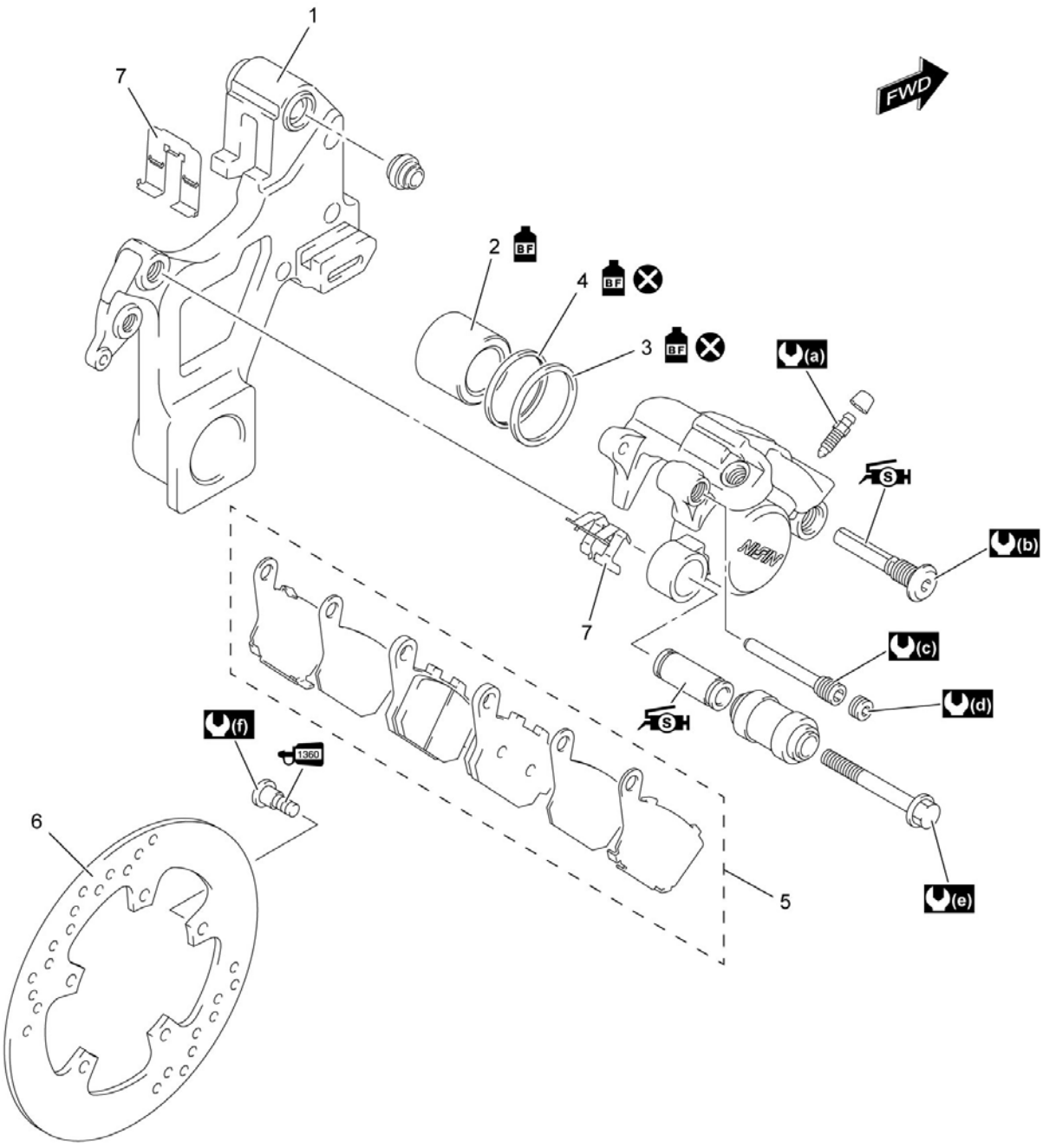

1.	Rear caliper bracket	7.	Brake pad spring	(f):	23 N·m (2.3 kgf-m, 17.0 lbf-ft)
2.	Piston	(a):	6 N·m (0.61 kgf-m, 4.45 lbf-ft)	S:	Apply silicone grease to the sliding surface.
3.	Piston seal	(b):	27 N·m (2.8 kgf-m, 20.0 lbf-ft)	1360:	Apply thread lock to the thread part.

4.	Dust seal	(c):	18 N·m (1.8 kgf-m, 13.5 lbf-ft)	BF:	Apply brake fluid.
5.	Rear brake pad/Shim set	(d):	2.5 N·m (0.25 kgf-m, 1.85 lbf-ft)	:	Do not reuse.
6.	Rear brake disc	(e):	22 N·m (2.2 kgf-m, 16.5 lbf-ft)		

Rear Brake Caliper Disassembly and Reassembly

Refer to ***Rear Brake Caliper Removal and Installation***.
Reference: Rear Brake Components

⚠CAUTION:
Take care not to damage piston and caliper cylinder of rear brake caliper.

Disassembly

1) Remove the pad spring (1) and rubber boot (2).

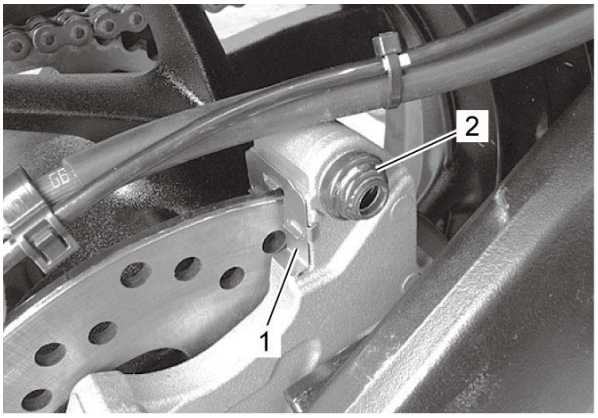

2) Remove the pad spring (1).
3) Remove the sleeve (2) and rubber boot (3).

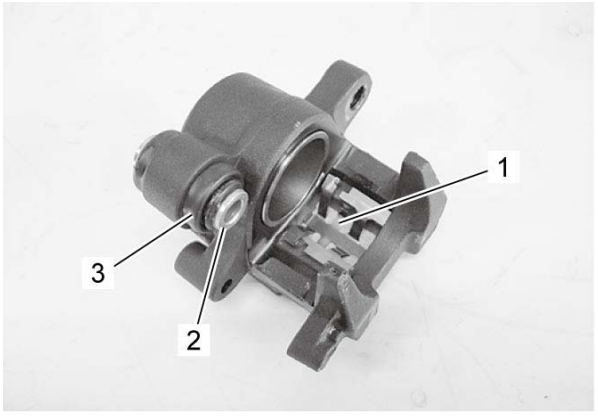

4) Remove the caliper piston applying compressed air gradually from the hole for the brake hose.

⚠WARNING:
Do not apply highly compressed air to the piston as it is. Place a cloth to prevent brake piston from jumping-out. Gradually apply compressed air. Do not place your fingers in front of brake piston while applying compressed air.



5) Remove the dust seal (1) and piston seal (2).

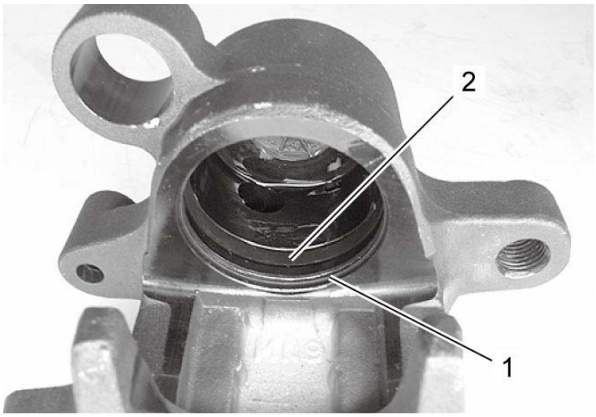

Reassembly

Reference: Rear Brake Caliper Parts Inspection

Reassemble the caliper in the reverse order of disassembly. Pay attention to the following points:

- Wash the caliper bore and piston with specified brake fluid. Particularly wash the dust seal groove and piston seal groove.

NOTICE:

- **Wash the caliper components with fresh brake fluid before reassembly. Never use cleaning solvent or gasoline to wash them.**
- **Do not wipe the brake fluid off after washing the components.**
- **When washing the components, use the specified brake fluid. Never use different types of fluid or cleaning solvent such as gasoline, kerosine or the others.**

Brake fluid (DOT 4)

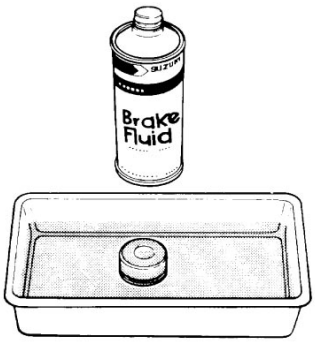

- Apply the brake fluid to new piston seal (1) and new dust seal (2).
  Brake fluid (DOT 4)
- Install the piston seal (1) and dust seal (2).

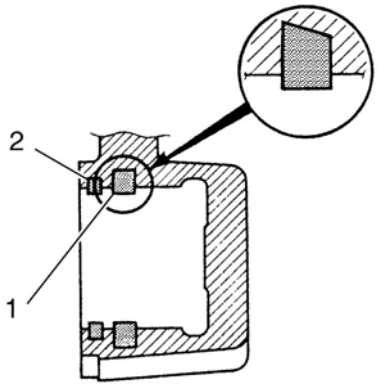

- Apply grease to the sleeve (1).
  “A”: Grease 99000–25100 (SUZUKI SILICONE GREASE)
- Install the sleeve (1) into the rubber boot.
- Set the rubber boot to the sleeve securely.

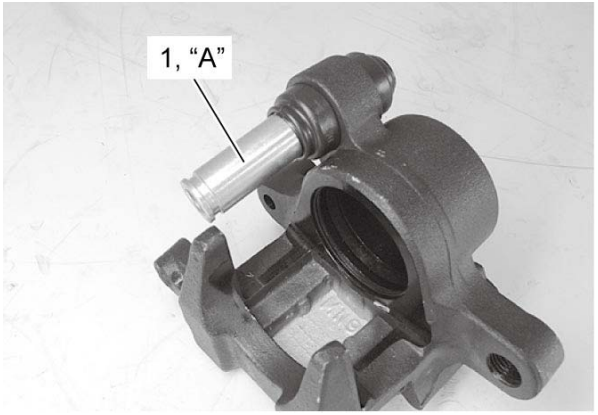



Rear Brake Caliper Parts Inspection

Refer to ***Rear Brake Caliper Disassembly and Reassembly***.

Brake Caliper Cylinder

Inspect the brake caliper cylinder wall for nicks, scratches or other damage. If any damage is found, replace the caliper with a new one.



Brake Caliper Piston

Inspect the brake caliper piston surface for any scratches or other damage. If any defects are found, replace the piston with a new one.



Brake Pad Mounting Pin

Inspect the brake pad mounting pin for wear and other damage. If any damage is found, replace the brake pad mounting pin with a new one.



Boot and Sleeve

Inspect the boots and sleeve for damage and wear. If any defects are found, replace them with new ones.



Brake Pad Spring

Inspect the brake pad springs for damage and excessive bend. If any defects are found, replace them with new ones.

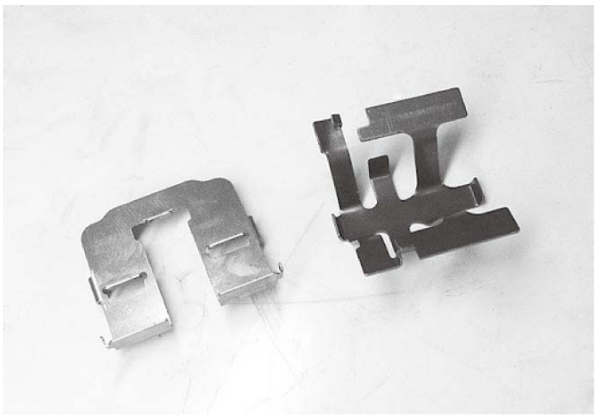

Brake Caliper Sliding Pin

Inspect the brake caliper sliding pin for wear and other damage. If any damage is found, replace the brake caliper sliding pin with a new one.



Rear Brake Caliper Removal and Installation

Reference: Rear Brake Components

Removal

1) Drain brake fluid. ☞

2) Remove the brake pads. ☞

3) Place a rag underneath the union bolt on the brake caliper to catch any spilt brake fluid.

4) Remove the brake hose from the caliper by removing the union bolt (1) and catch the brake fluid in a suitable receptacle.

5) Loosen the sliding pin (2).



6) Remove the sliding pin (1) and remove the caliper (2) from the caliper bracket.

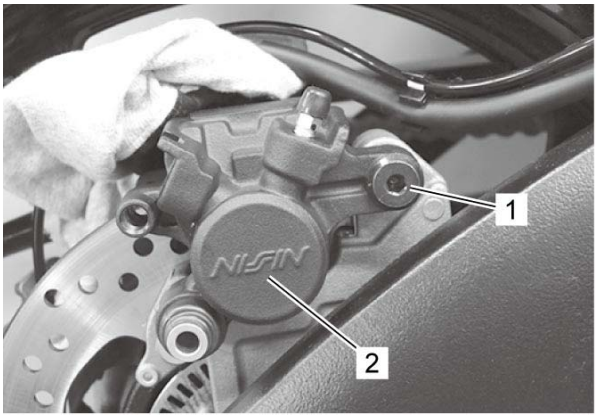

Installation

1) Install the caliper to the caliper bracket.

2) Apply grease to the sliding pin (1) and sleeve (2).

"A": Grease 99000–25100 (SUZUKI SILICONE GREASE)

3) Temporarily tighten the sliding pin (1).

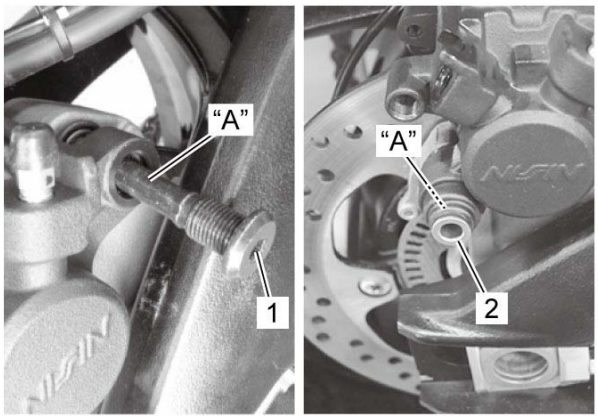

4) Install the brake pads. ☞

5) Tighten the sliding pin (1) to the specified torque.

Tightening torque

Rear brake caliper sliding pin (a): 27 N·m (2.8 kgf-m, 20.0 lbf-ft)

6) Install the brake hose union bolt (2) and new seal washers to brake hose.

7) After the brake hose union has contacted the stopper, tighten the union bolt (2) to the specified torque.

Tightening torque

Brake hose union bolt (b): 23 N·m (2.3 kgf-m, 17.0 lbf-ft)

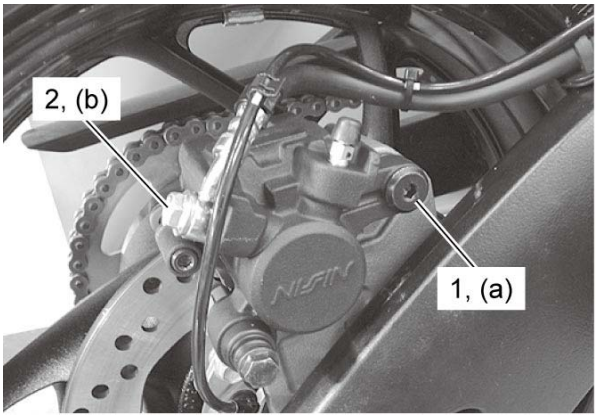

8) Bleed air from the brake system after installing the caliper. ☞

9) Check the brake fluid leakage referring to ***Brake Hose Inspection*** and brake operation.

Rear Brake Disc Inspection

Brake Disc Thickness

Check the brake disc for damage or cracks and measure the thickness using the micrometer.
Replace the brake disc if the thickness is less than the service limit or if defect is found.

Rear brake disc thickness

[Limit]: 4.5 mm (0.18 in)

Special Tool

(A): 09912–66310

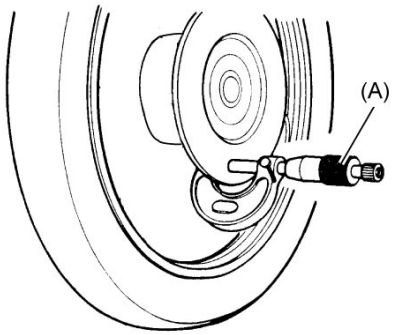

Brake Disc Runout

1) Dismount the rear brake pads.
Refer to ***Rear Brake Pad Replacement***.

2) Measure the runout using the dial gauge.
Replace the disc if the runout exceeds the service limit.

Rear brake disc runout

[Limit]: 0.30 mm (0.012 in)

Special Tool

(A): 09900–20607
09900–20701

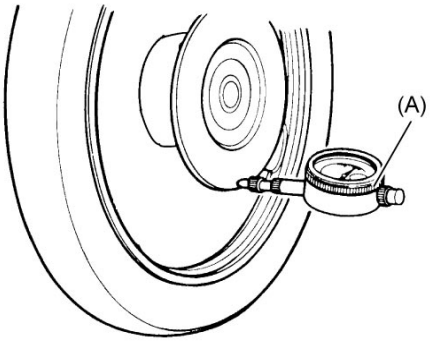

3) Remount the rear brake pads.
Refer to ***Rear Brake Pad Replacement***.

Rear Brake Disc Removal and Installation

Refer to ***Rear Wheel Assembly Removal and Installation***.

Removal

1) Remove the rear brake disc (1).

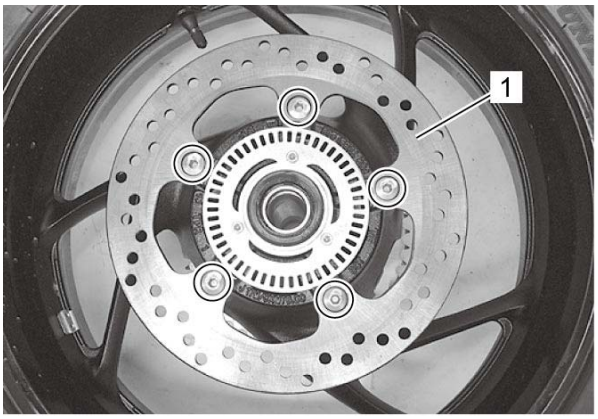

Installation

Reference: Rear Brake Disc Inspection

1) Make sure that the brake disc (1) is clean and free of any grease.

2) Install the rear brake disc (1).

NOTE:
The stamped mark (2) on the brake disc should face to the outside.

3) Apply thread lock to the brake disc bolts and tighten them to the specified torque.

"A": Thread lock cement 99000–32130 (THREAD LOCK CEMENT 1360)

Tightening torque

Brake disc bolt (a): 23 N·m (2.3 kgf-m, 17.0 lbf-ft)

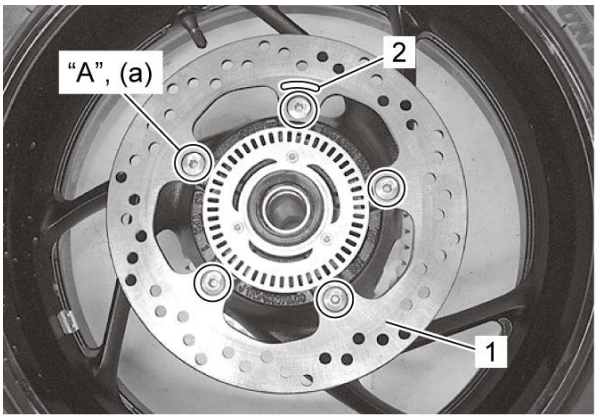

Rear Brake Pad Inspection

The extent of brake pads wear can be checked by observing the grooved limit line “a” on the pads. When the wear exceeds the grooved limit line, replace the pads with new ones. ☞

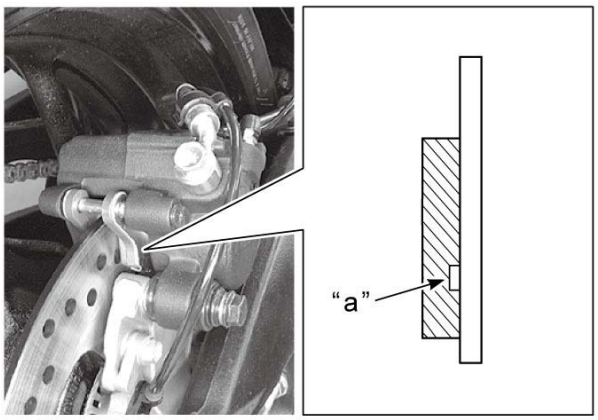

Rear Brake Pad Replacement

Reference: Rear Brake Components

NOTE:
After replacing the brake pads, pump the brake pedal several times to check for proper brake operation and then check the brake fluid level.

1) Remove the rear wheel speed sensor bracket. ☞

2) Remove the pin plug (1).

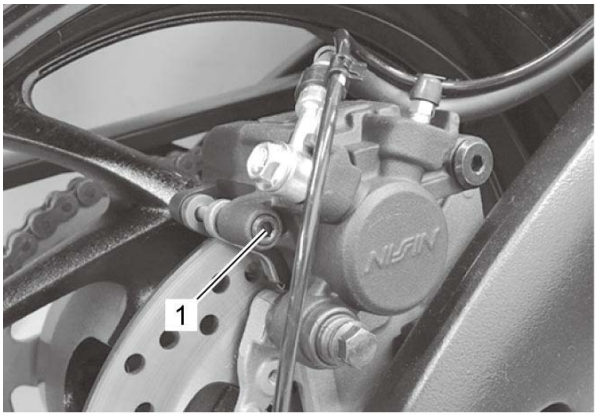

3) Remove the pad mounting pin (1).

4) Remove the caliper mounting bolt (2).

5) Remove the brake pads (3) with the rear caliper pivoted up.

NOTE:
Do not operate the brake pedal while removing the brake pads.

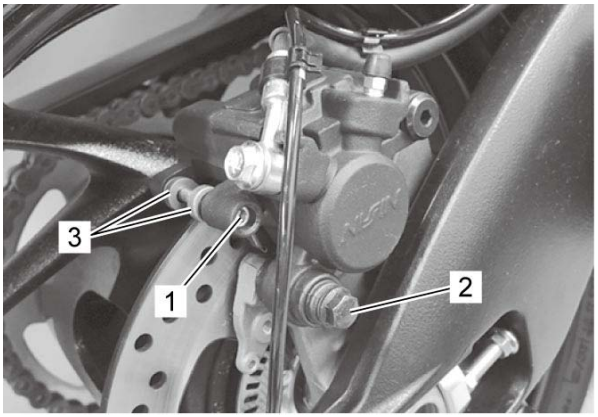

6) Clean up the caliper especially around the caliper piston.

7) Assemble the new brake pads (1), insulators (2) and shims (3).

NOTE:

- **Replace the brake pads as a set.**
- **Pushing back the caliper piston into the caliper will facilitate installation of the brake pads. At the time, observe the reservoir level not to exceed the upper level.**

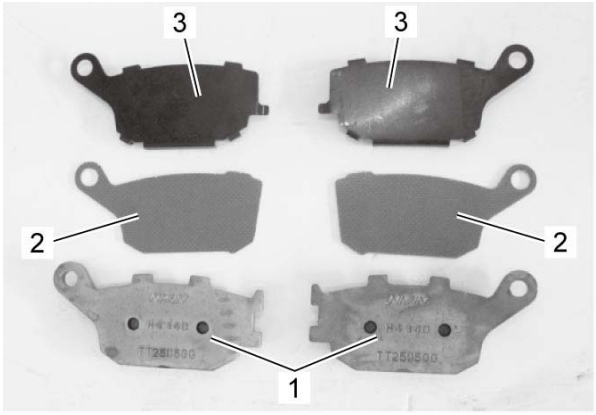

8) Install the new brake pads.

NOTE:
Check the pads end (1) for proper fit to the brake pad spring.

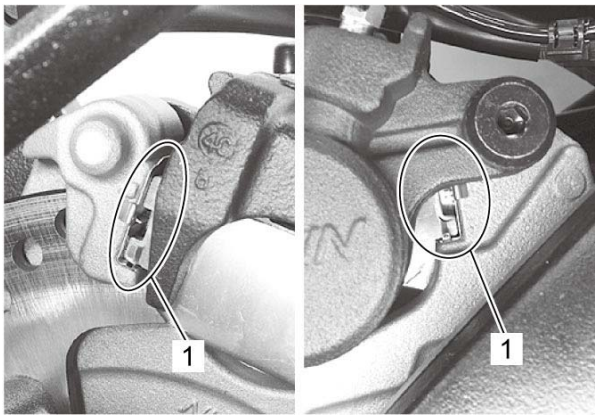

9) Tighten the caliper mounting bolt (1) and pad mounting pin (2) to the specified torque.

Tightening torque

Rear brake caliper mounting bolt (a): 22 N·m (2.2 kgf-m, 16.5 lbf-ft)
Rear brake pad mounting pin (b): 18 N·m (1.8 kgf-m, 13.5 lbf-ft)

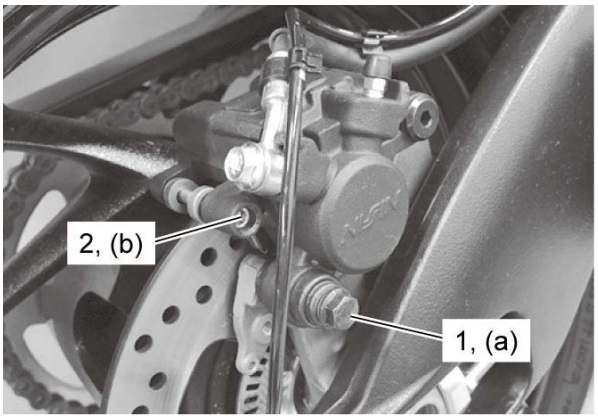

10) Tighten the pin plug (1) to the specified torque.

Tightening torque

Rear brake pad pin plug (a): 2.5 N·m (0.25 kgf-m, 1.85 lbf-ft)

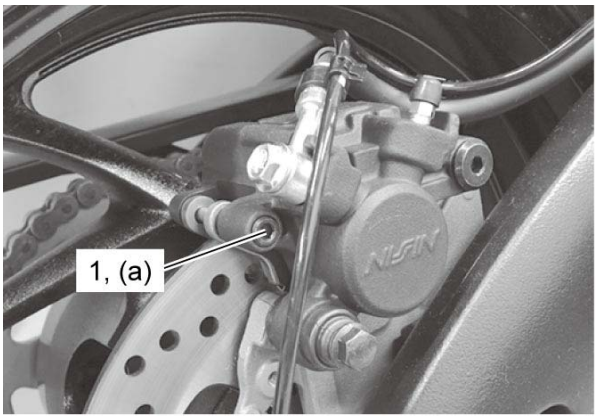

11) Install the rear wheel speed sensor bracket. ☞

Tightening Torque Specifications

Fastening part	Tightening torque			Note
	N·m	kgf-m	lbf-ft	
Rear brake caliper mounting bolt	22	2.2	16.5	☞
Rear brake pad mounting pin	18	1.8	13.5	☞
Rear brake pad pin plug	2.5	0.25	1.85	☞
Rear brake caliper sliding pin	27	2.8	20.0	☞
Brake hose union bolt	23	2.3	17.0	☞
Brake disc bolt	23	2.3	17.0	☞

Reference:
For the tightening torques of fasteners not specified in this page, refer to:
Rear Brake Components
Fasteners Information

Recommended Service Material

Material	SUZUKI recommended product or Specification		Note
Brake fluid	DOT 4	—	☞ ☞
Grease	SUZUKI SILICONE GREASE	P/No.: 99000–25100	☞ ☞
Thread lock cement	THREAD LOCK CEMENT 1360	P/No.: 99000–32130	☞

NOTE:
Required service material(s) is also described in:
Rear Brake Components

Special Tool

09900–20607 Dial gauge (10 x 0.01 mm) ☞	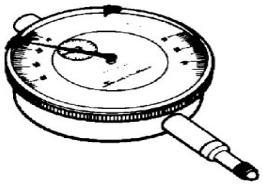	09900–20701 Dial gauge chuck ☞	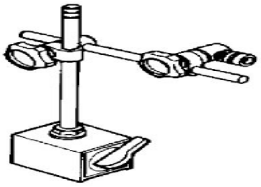
09912–66310 Micrometer (0 - 25 mm) ☞	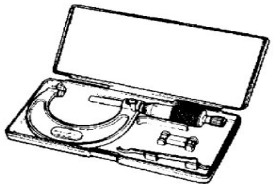		

Precautions for ABS Service



- Battery voltage is always applied to the ABS control unit. Therefore, disconnect the battery (–) lead wire before disconnecting the ABS control unit coupler.
- When the ABS control unit coupler is connected, do not disconnect the sensor coupler(s) with the ignition switch turned ON. If the sensor coupler is disconnected with the ignition ON, DTC will be stored in the ABS control unit.
- The wheel speed sensor cannot be disassembled.

Precautions for Diagnosing Troubles

To ensure that the trouble diagnosis is done accurately and smoothly, observe the following and follow ***ABS Check***.

- The information on the DTCs detected by the ABS control unit can be checked and cleared using the special tool.

> **NOTE:**
> **After repairing the trouble, clear the DTC using special tool.** ☞

- If the motorcycle was operated in any of the following conditions, ABS indicator light may light but this does not indicate any fault in ABS.
  - The motorcycle is stuck in mud, sand, etc.
  - Wheel spins while driving.
  - Wheels are rotated while the motorcycle is jacked up.
- Be sure to follow the trouble diagnosis procedure described in ***ABS Check***. If the trouble diagnosis procedure is not followed properly, incorrect diagnosis may result. (If the incorrect procedure is performed, other DTC may be stored in the ABS control unit.)

ABS Symptom Diagnosis

Condition	Possible Cause	Action
The ABS indicator light keeps lighting up even though the motorcycle is ridden at more than 5 km/h (3.1 mile/h).	Malfunctioning the ABS function.	*Perform the ABS check.* ☞
	Malfunctioning the ABS indicator light circuit.	*Check the ABS indicator light circuit.* ☞
The ABS indicator light does not light up when turning the ignition switch to ON.	Malfunctioning the ABS function.	*Perform the ABS check.* ☞
	Malfunctioning the ABS indicator light circuit.	*Check the ABS indicator light circuit.* ☞
	Malfunctioning the combination meter.	*Check the combination meter.* ☞

ABS Wiring Diagram

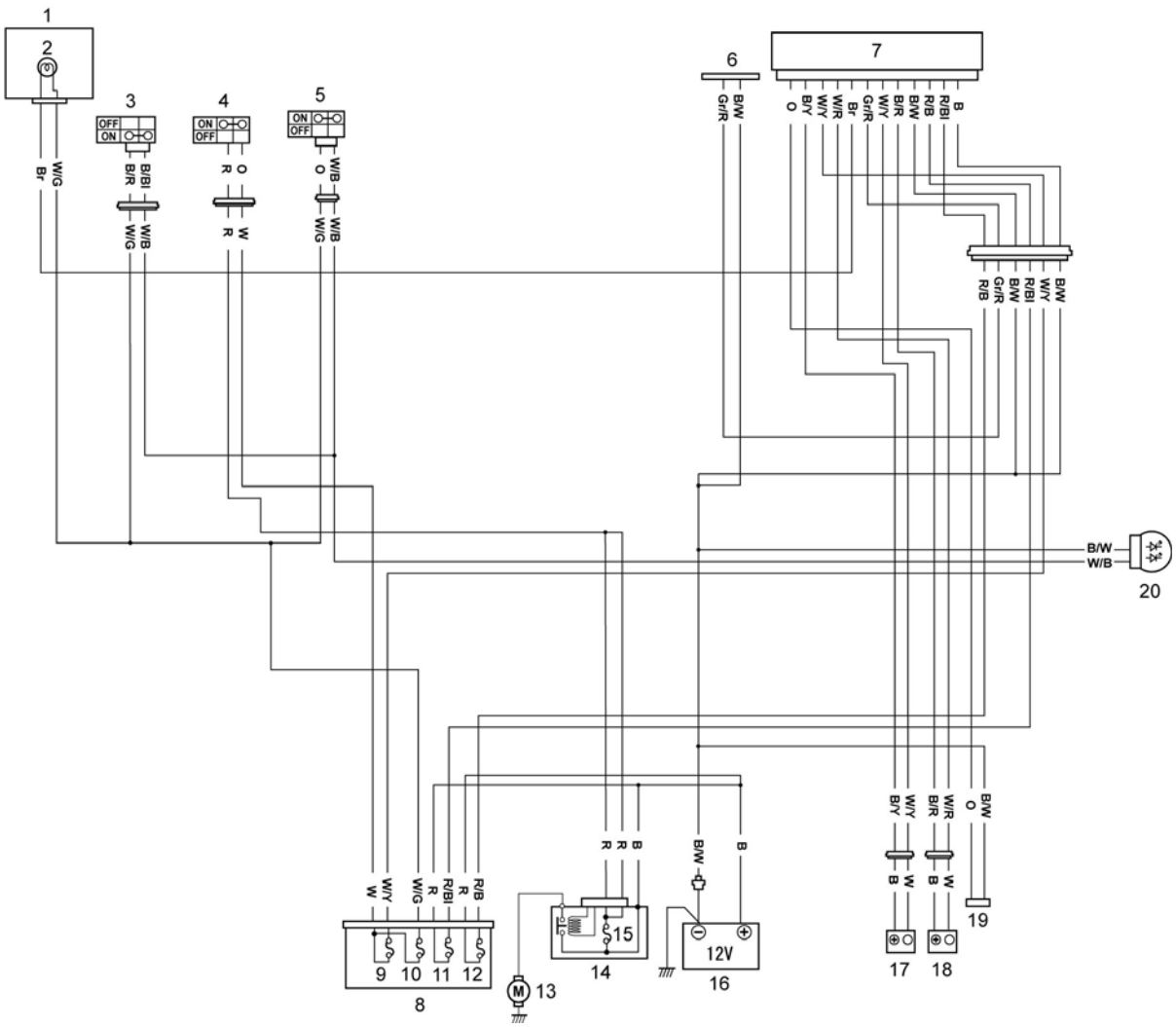

1.	Combination meter	8.	Fuse box	15.	Main fuse (30 A)
2.	ABS indicator light	9.	Ignition fuse (10 A)	16.	Battery
3.	Front brake switch	10.	Signal fuse (10 A)	17.	Rear wheel speed sensor
4.	Ignition switch	11.	ABS valve fuse (15 A)	18.	Front wheel speed sensor
5.	Rear brake switch	12.	ABS motor fuse (20 A)	19.	Mode select coupler (2P)
6.	Mode select coupler (6P)	13.	Starter motor	20.	Rear combination light
7.	ABS control unit	14.	Starter relay		

DTC (Diagnostic Trouble Code) Deleting

NOTE:
- **The previous malfunction history code (Past DTC) still remains stored in the ABS HU. Therefore, erase the history code memorized in the ABS HU using special tool.**
- **The DTC is memorized in the ABS HU also when the wire coupler of any sensor is disconnected. Therefore, when a wire coupler has been disconnected at the time of diagnosis, erase the stored malfunction history code.**
- **DTC can be checked by using the SDS. Refer to the SDS operation manual for further details.**

1) Connect the special tool to the mode select coupler (2P). ☞

2) Switch the special tool to ON and turn the ignition switch ON.

3) While the DTCs are being output, set the special tool to OFF. The DTC deletion mode is started after the switch is set to OFF.



4) In the DTC deletion mode, switch the special tool from OFF to ON three times within 12.5 seconds, each time leaving it at ON for more than 1 second.

NOTE:
After deleting DTC with the mode select switch in ON position, the system resumes the self-diagnosis mode again and outputs the DTC.



DTC Deleting Diagram

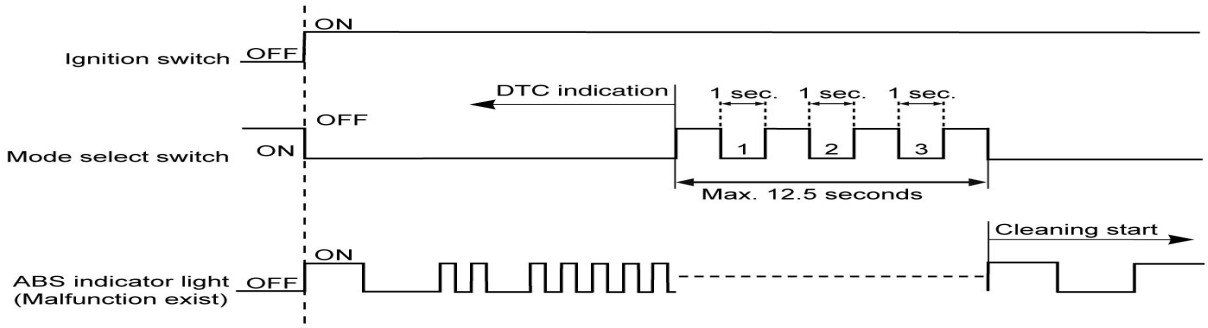

5) After deleting the DTCs, repeat the code output procedure and make sure that no DTCs remain (the ABS indicator light no longer flashes).

> **NOTE:**
> **If any DTCs remain, perform the appropriate procedures, then delete the codes. If DTCs are left stored, confusion may occur and unnecessary repairs may be made.**

6) Turn the ignition switch OFF and disconnect the special tool.

7) Install the removed parts.

8) Afterwards, ride the motorcycle at more than 30 km/h (18.6 mile/h) and quickly apply the brakes to check that the ABS activates correctly.

DTC (Diagnostic Trouble Code) Output

NOTE:

- **If there is a DTC recorded, the ABS indicator light repeatedly flashes in a cyclic manner. (However, when five minutes have elapsed from the start of self-diagnosis mode, the output of the DTC will be interrupted.)**
- **If no DTC is recorded, the light repeats flashing for 3.6 seconds in a cyclic manner.**
- **In the case that the mode select switch is turned OFF or the vehicle speed (both wheels) exceeds 10 km/h (6.2 mile/h), the output of DTC will be interrupted.**
- **Don't disconnect couplers from ABS HU, the battery cable from the battery, ABS HU ground wire harness from the engine or main fuse before confirming the malfunction code (self-diagnostic trouble code) stored in memory. Such disconnection will erase the memorized information in ABS HU memory.**
- **Be sure to read *Precautions for Electrical Circuit Service* and *Precautions for ABS Service* before inspection and observe what is written there.**
- **After carrying out DTC deleting and ABS operation check, explain to the customer that the ABS is operating correctly.** ☞
- **DTC can be checked by using the SDS. Refer to the SDS operation manual for further details.**

1) Turn the ignition switch OFF.

2) Remove the rear seat. ☞

3) Connect the special tool to the mode select coupler (2P) (1).

Special Tool

(A): 09930-82760

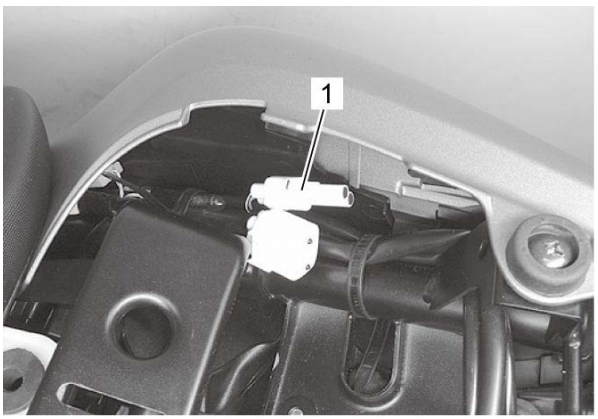

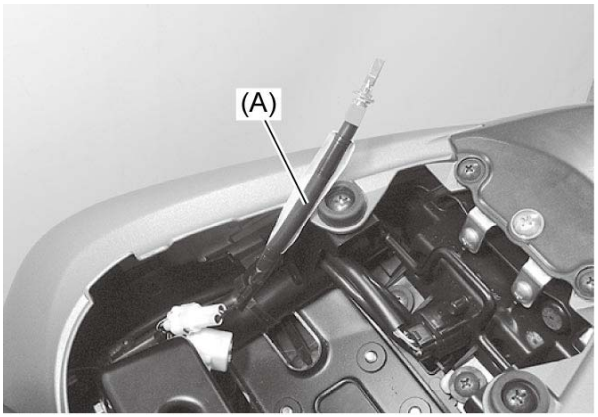

4) Switch the special tool to ON.



5) Turn the ignition switch ON.
The ABS indicator light (1) starts flashing to indicate the DTC. ☞

NOTE:
If the DTCs are to be output for a long time, remove the HEAD-LO fuse in order to prevent the battery from discharging.

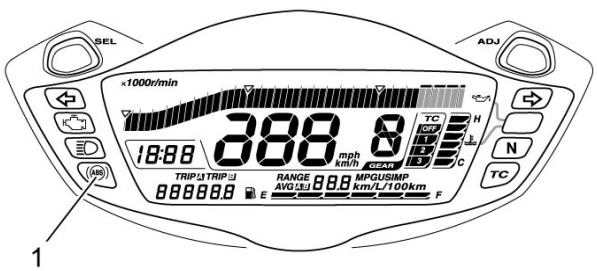

6) Turn the ignition switch OFF and disconnect the special tool.

7) Install the rear seat. ☞

Understanding the DTC (Diagnostic Trouble Code)

A two-digit DTC is shown through the flashing pattern of the ABS indicator light. A number between 1 and 9 is represented by the number of times that the ABS indicator light lights up in interval of 0.4 seconds and the separation between the tens and ones are indicated by the light staying off for 1.6 seconds. In addition, the separation between the start code and the DTC is indicated by the light being off for 3.6 seconds. After the start code is displayed, DTCs appear from the smallest number code.
If no DTC is recorded, the light repeats flashing for 3.6 seconds in a cyclic manner.

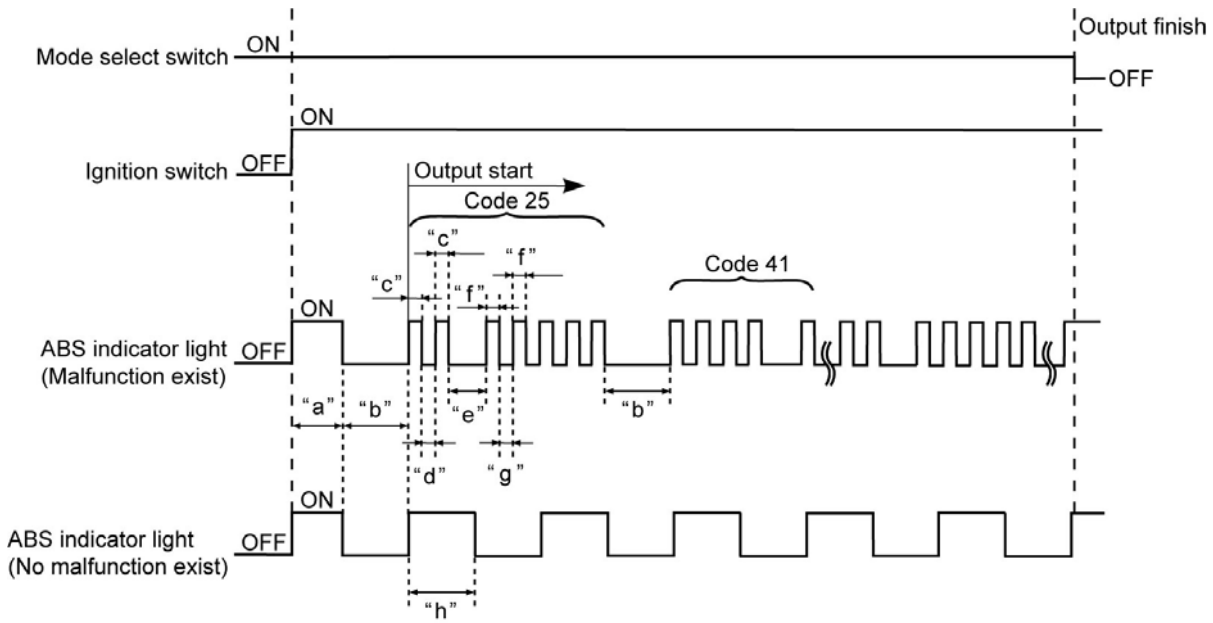

"a":	Initial minimum light ON time (About 2 seconds)	"e":	Main-sub code interval (1.6 seconds)
"b":	Error code interval (About 3.6 seconds)	"f":	Sub code light ON time (0.4 seconds)
"c":	Main code light ON time (0.4 seconds)	"g":	Sub code light OFF time (0.4 seconds)
"d":	Main code light OFF time (0.4 seconds)	"h":	About 3.6 seconds

DTC C1625 (25)

Possible Cause
Wheel Speed Sensor Related Malfunction Incorrect tire size, poor tire pressure, deformed wheel, wheel spinning, incorrect tooth count, interference at one or more wheels, permanent bad signal, etc.

Troubleshooting

Step	Action	Yes	No
1	1) Check that the specified tires are installed. ☞ ***Are the tires OK?***	Go to Step 2.	Use the specified tires.
2	1) Make sure the tire pressure for each tire. ☞ ***Is the tire pressure for each tire correct?***	Go to Step 3.	Adjust the tire pressure.
3	1) Inspect both wheel speed sensor rotors for damage and check that no foreign objects are caught in the rotor openings. ☞ ***Are the rotors OK?***	Go to Step 4.	Clean or replace the rotor. • Front wheel speed sensor rotor: ☞ • Rear wheel speed sensor rotor: ☞
4	1) Inspect the clearances of the front and rear wheel speed sensor – sensor rotor using the thickness gauge. ☞ ***Are the clearances OK?***	Replace the ABS control unit/HU. ☞	Adjust the clearance.

DTC C1635 (35)

Possible Cause
ABS Motor Malfunction ABS motor relay circuit open or short, broken fuse for motor relay, ABS motor circuit open or short, faulty ABS motor relay, faulty ABS motor, faulty ABS control unit, etc.

Wiring Diagram

Refer to ***ABS Control Unit / HU Diagram***.

Troubleshooting

Step	Action	Yes	No
1	1) Turn the ignition switch ON and check that the operation sound is heard from the ABS control unit. ☞ ***Does the ABS motor make any turning noise?***	• Faulty HU motor. • Replace the ABS control unit/HU. ☞	Go to Step 2.
2	1) Turn the ignition switch OFF. 2) Remove the front seat. ☞ 3) Open the fuse box inspect the ABS motor fuse (20 A) (1). **NOTE:** **If a fuse is blown, find the cause of the problem and correct it before replacing the fuse.** 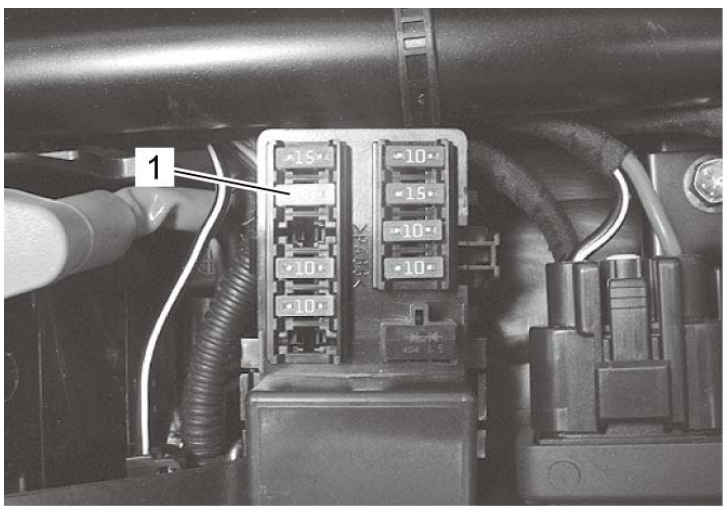 ***Is the ABS motor fuse OK?***	Go to Step 3.	Replace the ABS motor fuse.
3	1) Lift and support the fuel tank. ☞ 2) Check the ABS control unit coupler (1) for loose	Replace the ABS control unit/HU.	Inspect the wire harness. (Faulty motor

	or poor contacts. If OK, then disconnect the ABS control unit coupler. ☞ 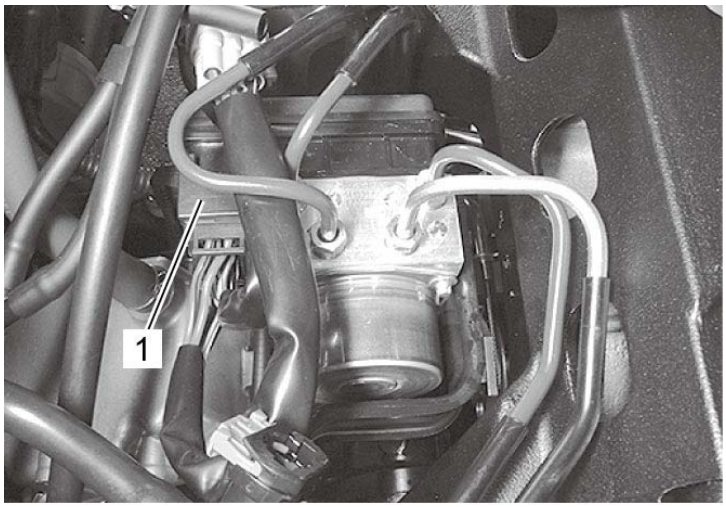 3) Measure the voltage between “T10” (R/Bl) and “T18” (B) at the coupler. 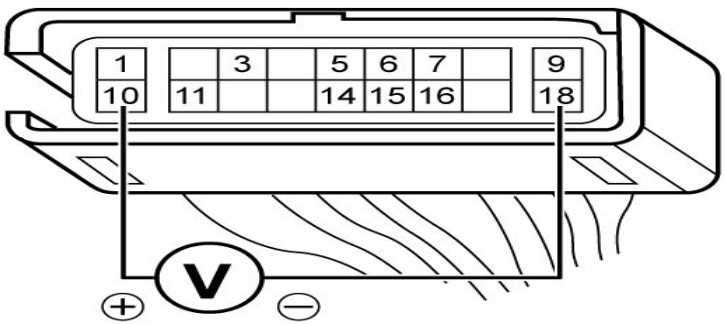 ***Is voltage 12.0 V or more?***	☞	power supply or ground wire)

DTC C1641 (41)

Possible Cause
Wheel Speed Sensor Signal Malfunction (F) Too great air gap, worn or missing teeth, noise, interference between lines, loose contact in wheel speed sensor connector, wheel speed sensor not securely fastened, input amplifier in wheel speed sensor connector, wheel speed sensor not securely fastened, input amplifier in ABS control unit failure, etc.

Troubleshooting

Step	Action	Yes	No
1	1) Inspect the clearance between the front wheel speed sensor and sensor rotor using the thickness gauge. ☞ ***Is the clearance OK?***	Go to Step 2.	Adjust the clearance.
2	1) Inspect the front wheel speed sensor rotor for damage and check that no foreign objects are caught in the rotor openings. ☞ ***Is the sensor rotor OK?***	Go to Step 3.	Clean or replace the sensor rotor. ☞
3	1) Check that the front wheel speed sensor (1) is mounted securely. 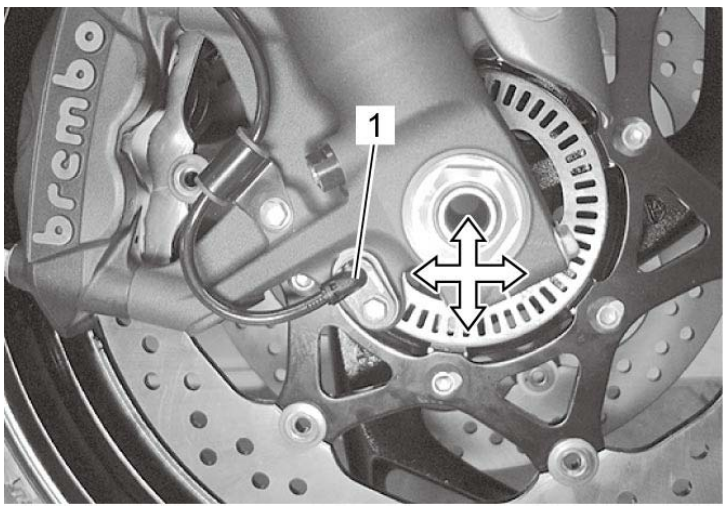 ***Is the sensor mounted securely?***	Go to DTC C1642 (42). ☞	Tighten the mounting bolt.

DTC C1642 (42)

Possible Cause
Wheel Speed Sensor Circuit Open (F) Wheel speed sensor circuit open or short, loosen contact in wheel speed sensor connector, input amplifier in ABS control unit failure, etc.

Wiring Diagram

Refer to ***ABS Control Unit / HU Diagram***.

Troubleshooting

Step	Action	Yes	No
1	1) Turn the ignition switch OFF. 2) Lift and support the fuel tank. ☞ 3) Check the ABS control unit coupler (1) and front wheel speed sensor coupler (2) for loose or poor contacts. If OK, then disconnect the ABS control unit coupler. ☞ 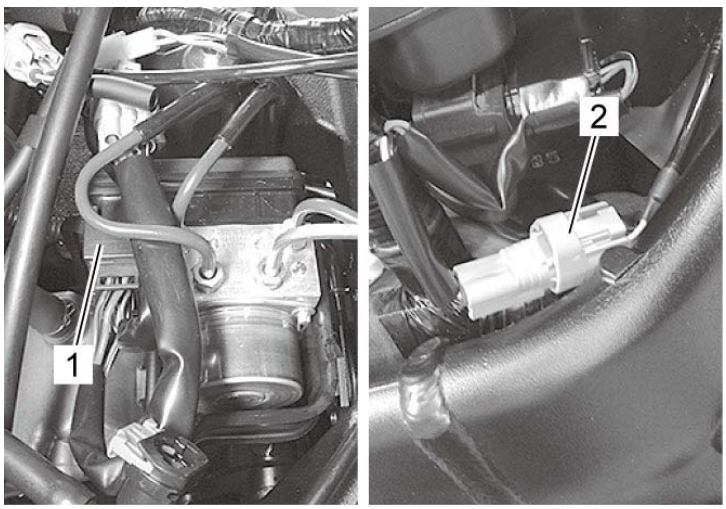 4) Check for continuity between “T16” (W/R) and “T7” (B/R) at the ABS control unit coupler. 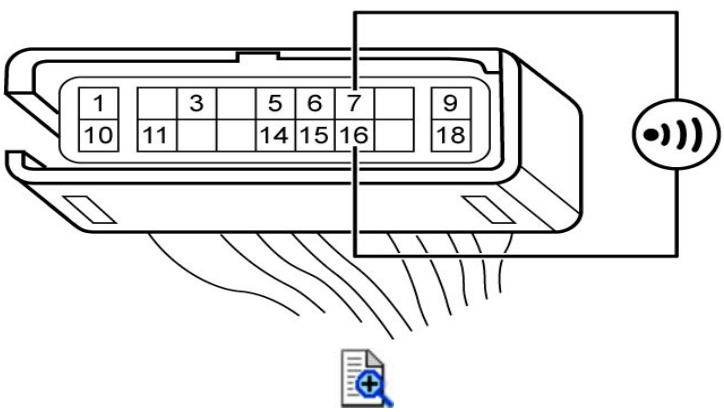 	Go to Step 2.	• Inspect the wire harness. (Faulty sensor wire) • Faulty front wheel speed sensor. ☞

	Is no continuity indicated?		
2	1) Check for continuity between “T16” (W/R) and ground at the ABS control unit coupler. 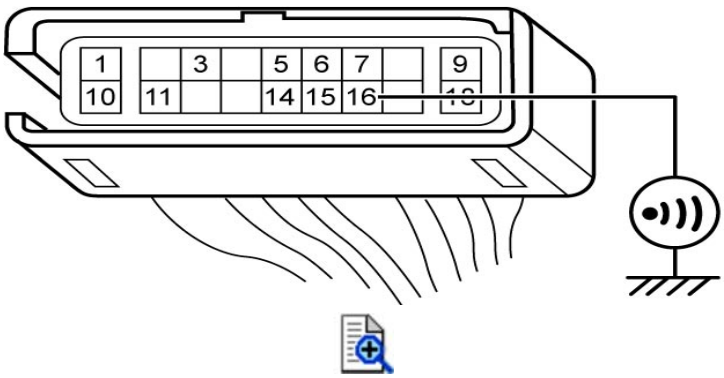 ***Is no continuity indicated?***	Go to Step 4.	Go to Step 3.
3	1) Disconnect the front wheel speed sensor coupler. 2) Check for continuity between White wire and ground at the front wheel speed sensor coupler. 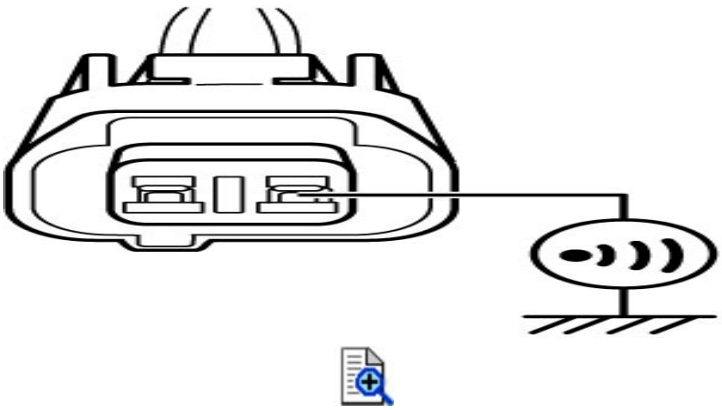 ***Is no continuity indicated?***	Inspect the wire harness. (Faulty W/R wire)	Faulty front wheel speed sensor. ☞
4	1) Check for continuity between “T7” (B/R) and ground at the ABS control unit coupler. 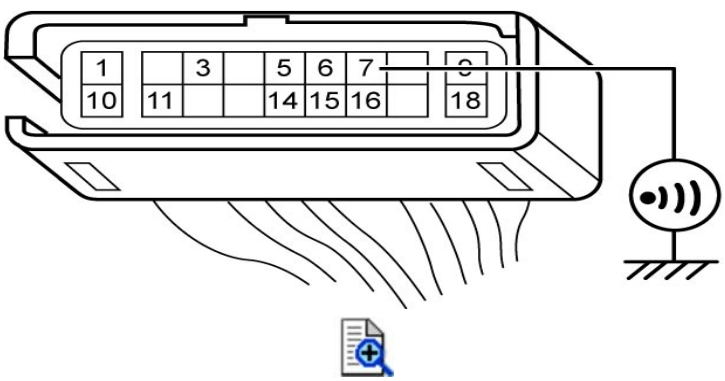 ***Is no continuity indicated?***	Go to Step 6.	Go to Step 5.

5	1) Disconnect the front wheel speed sensor coupler. 2) Check for continuity between Black wire and ground at the front wheel speed sensor coupler. 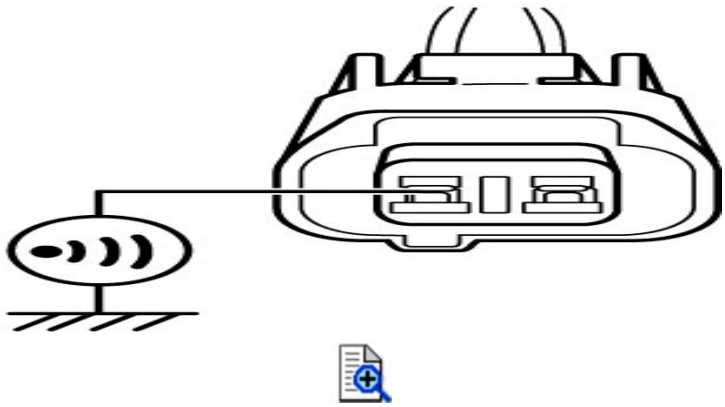 ***Is no continuity indicated?***	Inspect the wire harness. (Faulty B/R wire)	Faulty front wheel speed sensor. ☞
6	1) Disconnect the front wheel speed sensor coupler. 2) Check for continuity between “T16” (W/R) on the ABS control unit coupler and W/R wire on the front wheel speed sensor coupler. 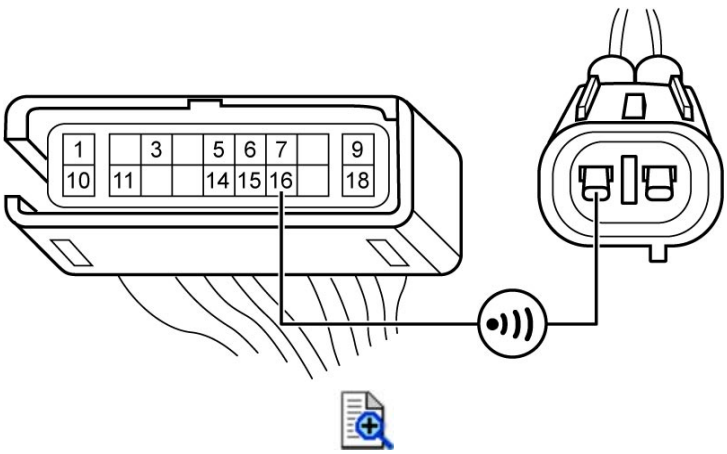 ***Is continuity indicated?***	Go to Step 7.	Inspect the wire harness. (Faulty W/R wire)
7	1) Check for continuity between “T7” (B/R) on the ABS control unit coupler and B/R wire on the front wheel speed sensor coupler. 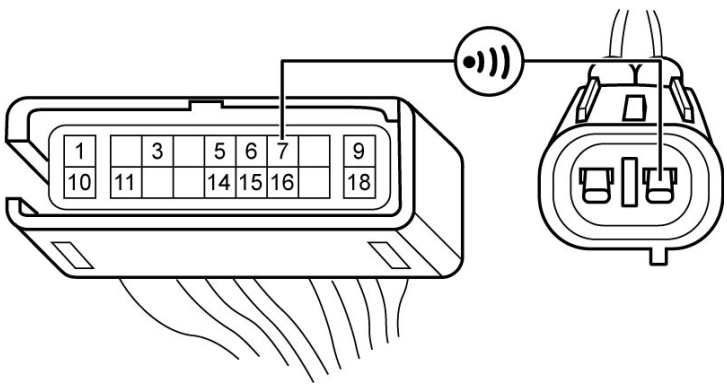 	Go to Step 8.	Inspect the wire harness. (Faulty B/R wire)

	 ***Is continuity indicated?***		
8	1) Measure the front wheel speed sensor current. Refer to “Wheel Speed Sensor Circuit” under ***Wheel Speed Sensor and Sensor Rotor Inspection***. ***Is check result OK?***	Replace the ABS control unit/HU. ☞	Faulty front wheel speed sensor. ☞

DTC C1644 (44)

Possible Cause
Wheel Speed Sensor Signal Malfunction (R) Too great air gap, worn or missing teeth, noise, interference between lines, loose contact in wheel speed sensor connector, wheel speed sensor not securely fastened, input amplifier in ABS control unit failure, etc.

Troubleshooting

Step	Action	Yes	No
1	1) Inspect the clearance between the rear wheel speed sensor and sensor rotor using the thickness gauge. ☞ ***Is the clearance OK?***	Go to Step 2.	Adjust the clearance.
2	1) Inspect the rear wheel speed sensor rotor for damage and check that no foreign objects are caught in the rotor openings. ☞ ***Is the sensor rotor OK?***	Go to Step 3.	Clean or replace the sensor rotor. ☞
3	1) Check that the rear wheel speed sensor (1) is mounted securely. 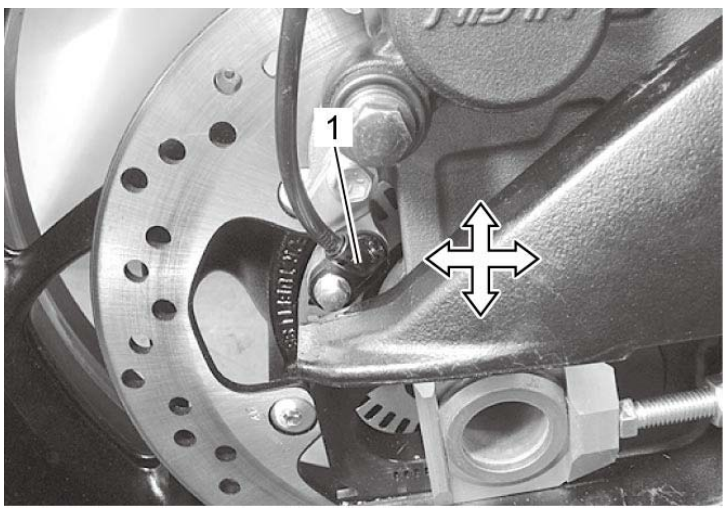 ***Is the sensor mounted securely?***	Go to DTC C1645 (45). ☞	Tighten the mounting bolt.

DTC C1645 (45)

Possible Cause
Wheel Speed Sensor Circuit Open (R) Wheel speed sensor circuit open or short, loosen contact in wheel speed sensor connector, input amplifier in ABS control unit failure, etc.

Wiring Diagram

Refer to ***ABS Control Unit / HU Diagram***.

Troubleshooting

Step	Action	Yes	No
1	1) Turn the ignition switch OFF. 2) Lift and support the fuel tank. ☞ 3) Check the ABS control unit coupler (1) and rear wheel speed sensor coupler (2) for loose or poor contacts. If OK, then disconnect the ABS control unit coupler. ☞ 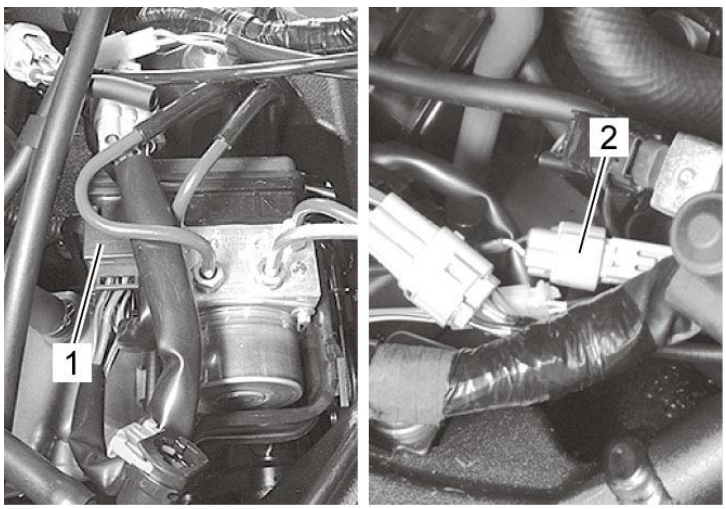 4) Check for continuity between “T15” (W/Y) and “T14” (B/Y) at the ABS control unit coupler. 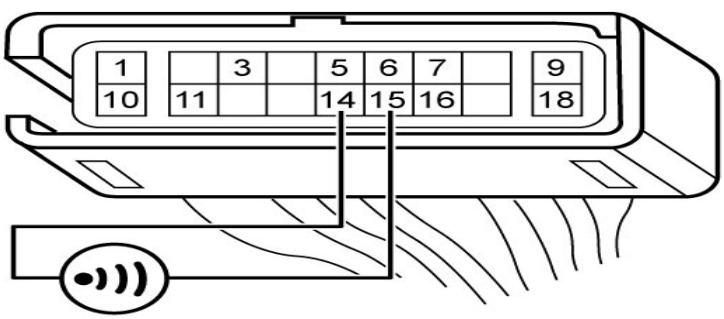 	Go to Step 2.	• Inspect the wire harness. (Faulty sensor wire) • Faulty rear wheel speed sensor. ☞

	Is no continuity indicated?		
2	1) Check for continuity between “T15” (W/Y) and ground at the ABS control unit coupler. 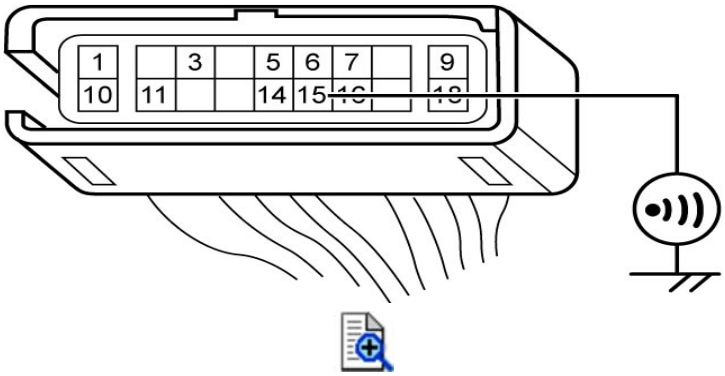 ***Is no continuity indicated?***	Go to Step 4.	Go to Step 3.
3	1) Disconnect the rear wheel speed sensor coupler. 2) Check for continuity between White wire and ground at the rear wheel speed sensor coupler. 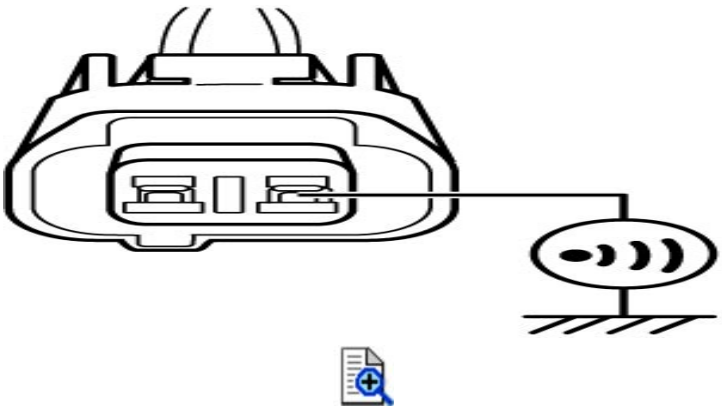 ***Is no continuity indicated?***	Inspect the wire harness. (Faulty W/Y wire)	Replace the rear wheel speed sensor. ☞
4	1) Check for continuity between “T14” (B/Y) and ground at the ABS control unit coupler. 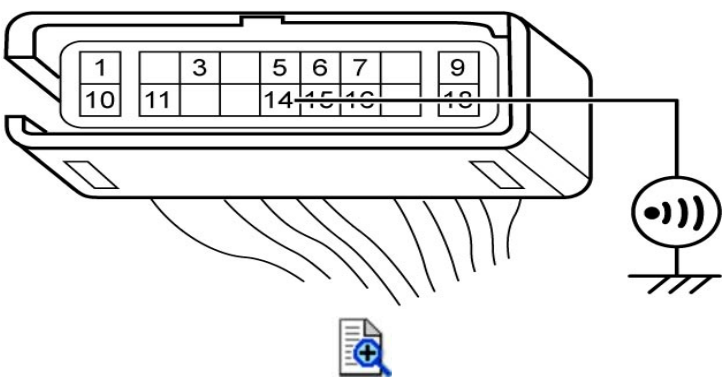 ***Is no continuity indicated?***	Go to Step 6.	Go to Step 5.

5	1) Disconnect the rear wheel speed sensor coupler. 2) Check for continuity between Black wire and ground at the rear wheel speed sensor coupler. 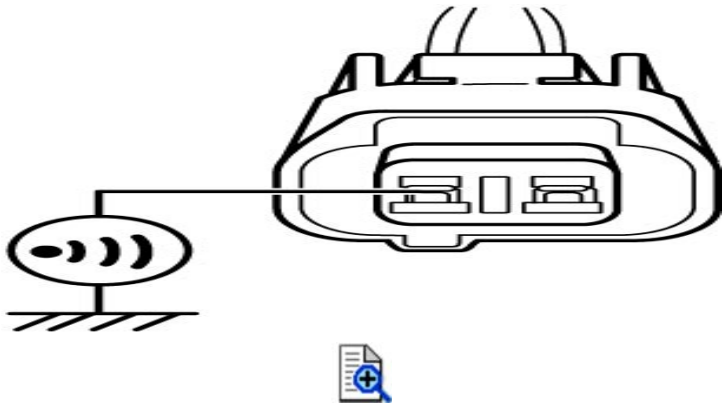 ***Is no continuity indicated?***	Inspect the wire harness. (Faulty B/Y wire)	Replace the rear wheel speed sensor. ☞
6	1) Disconnect the rear wheel speed sensor coupler. 2) Check for continuity between “T15” (W/Y) on the ABS control unit coupler and W/Y wire on the rear wheel speed sensor coupler. 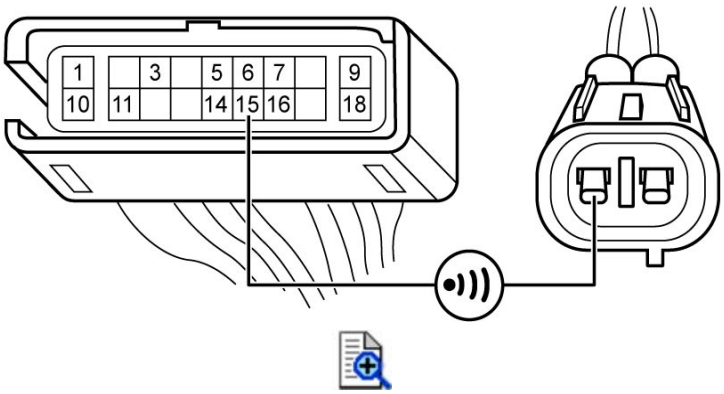 ***Is continuity indicated?***	Go to Step 7.	Inspect the wire harness. (Faulty W/Y wire)
7	1) Check for continuity between “T14” (B/Y) on the ABS control unit coupler and B/Y wire on the rear wheel speed sensor coupler. 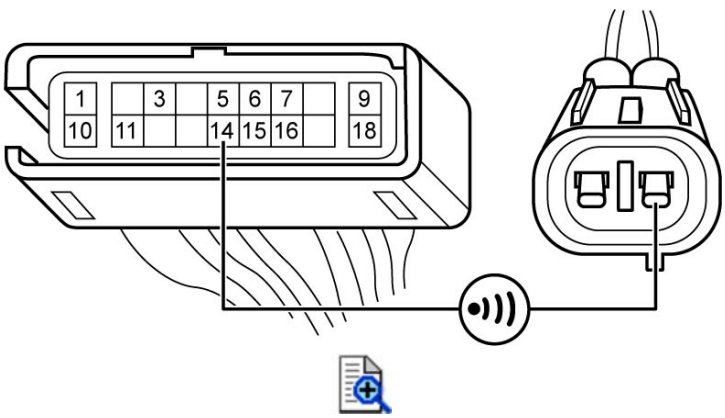 	Go to Step 8.	Inspect the wire harness. (Faulty B/Y wire)

	Is continuity indicated?		
8	1) Measure the rear wheel speed sensor current. Refer to “Wheel Speed Sensor Current” under ***Wheel Speed Sensor and Sensor Rotor Inspection***. ***Is check result OK?***	Replace the ABS control unit/HU. ☞	Replace the rear wheel speed sensor. ☞

DTC C1647 (47) / C1648 (48)

Possible Cause
C1647 (47): Supply Voltage (Increased) **C1648 (48): Supply Voltage (Decreased)** • Faulty generator or regulator/rectifier • Faulty battery • Faulty ABS control unit • Faulty wire harness, etc.

Wiring Diagram

Refer to ***ABS Control Unit / HU Diagram***.

Troubleshooting

Step	Action	Yes	No
1	1) Turn the ignition switch OFF. 2) Remove the front seat. ☞ 3) Measure the voltage between the (+) and (–) battery terminals. 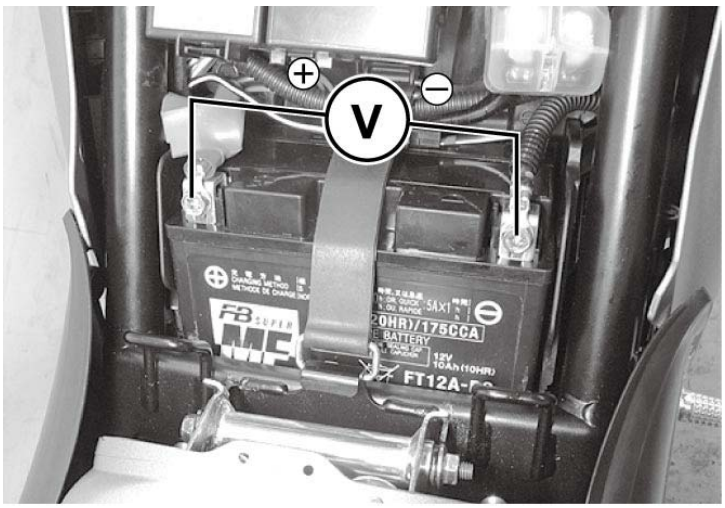 ***Is voltage 12 V or more?***	Go to Step 2.	Charge or replace the battery. ☞
2	1) Start the engine at 5000 r/min with the dimmer switch set to HI. 2) Measure the voltage between the (+) and (–) battery terminals. ***Is voltage 14.0 – 15.5 V?***	Go to Step 3.	Inspect the generator and regulator/rectifier. • Generator: ☞ • Regulator/rectifier: ☞
3	1) Turn the ignition switch OFF. 2) Lift and support the fuel tank. ☞ 3) Check the ABS control unit coupler (1) for loose or poor contacts. If OK, then disconnect the ABS	Replace the ABS control unit/HU. ☞	Inspect the wire harness. (Faulty ignition or ground wire)

control unit coupler.

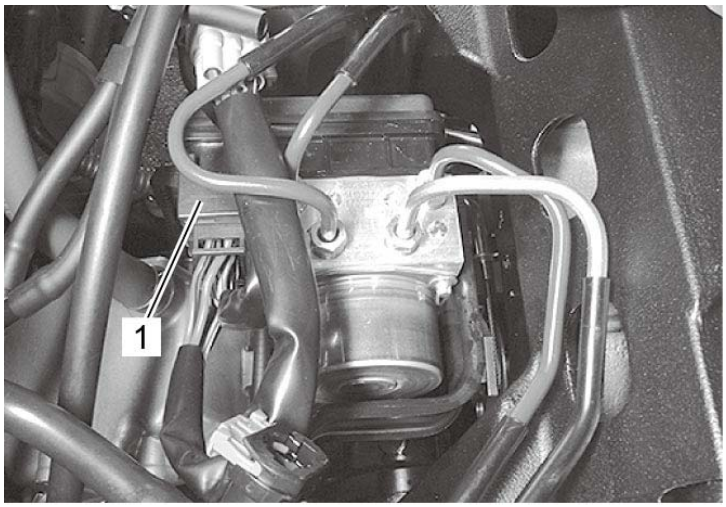

4) Start the engine at 5000 r/min with the dimmer switch set to HI.
5) Measure the voltage between “T6” (W/Y) and “T9” (B/W) at the coupler.

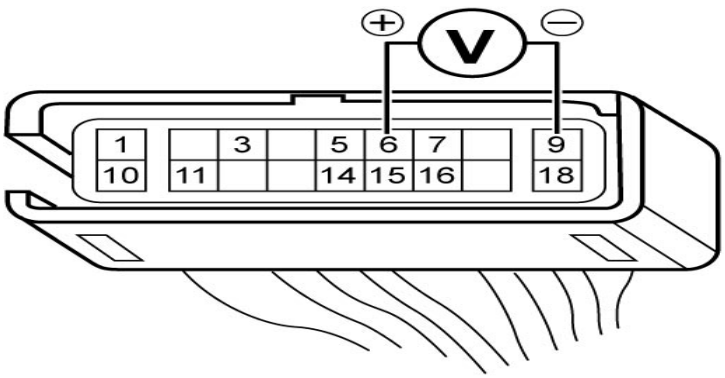

Is voltage 14.0 – 15.5 V?

DTC C1655 (55)

Possible Cause
ABS Control Unit Malfunction Faulty ABS control unit

Troubleshooting

Step	Action	Yes	No
1	1) Inspect the clearances of the front and rear wheel speed sensor – sensor rotor using the thickness gauge. ☞ ***Are the clearances OK?***	Go to Step 2.	Adjust the clearance.
2	1) Inspect both of the wheel speed sensor rotors for damage and check that no foreign objects are caught in the rotor openings. ☞ ***Are the rotors OK?***	Go to Step 3.	Clean or replace the rotor. • Front wheel speed sensor rotor: ☞ • Rear wheel speed sensor rotor: ☞
3	1) Check that the front and rear wheel speed sensors (1) are mounted securely. 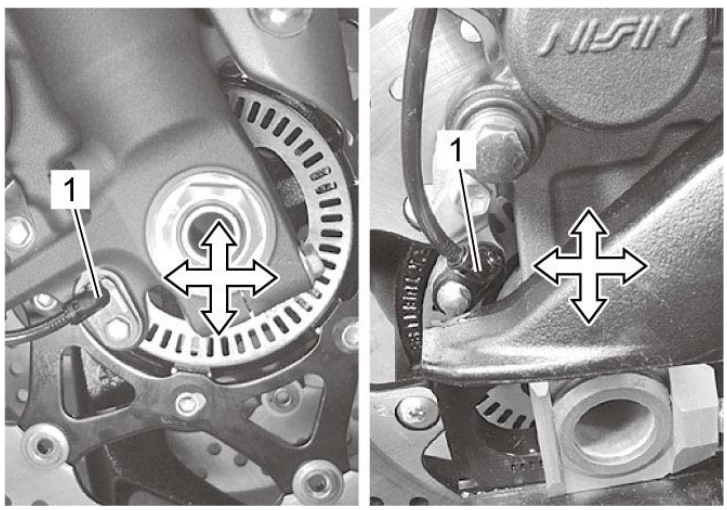 ***Are the sensors mounted securely?***	Go to Step 4.	Tighten the mounting bolts.
4	1) Delete DTCs ☞ and repeat the code output procedure ☞ .	Replace the ABS control unit/HU. ☞	Intermittent trouble.

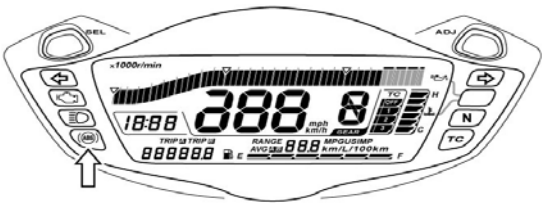

Is the DTC C1655 (55) output again?

DTC C1661 (61)

Possible Cause
ABS Solenoid Malfunction ABS valve relay circuit open or short, broken fuse for valve relay, faulty ABS valve relay, interruption of valve, failure output from ABS control unit, etc.

Troubleshooting

Step	Action	Yes	No
1	1) Turn the ignition switch OFF. 2) Remove the front seat. ☞ 3) Open the fuse box and inspect the ABS valve fuse (15 A) (1). **NOTE:** **If a fuse is blown, find the cause of the problem and correct it before replacing the fuse.** 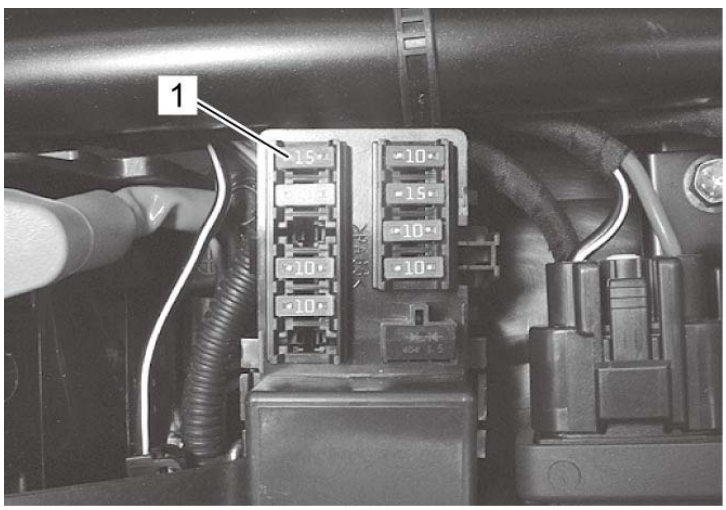 ***Is the ABS valve fuse OK?***	Go to Step 2.	Replace the ABS valve fuse.
2	1) Lift and support the fuel tank. ☞ 2) Check the ABS control unit coupler (1) for loose or poor contacts. If OK, then disconnect the ABS control unit coupler. ☞	Replace the ABS control unit/HU. ☞	Inspect the wire harness. (Faulty solenoid or ground wire)

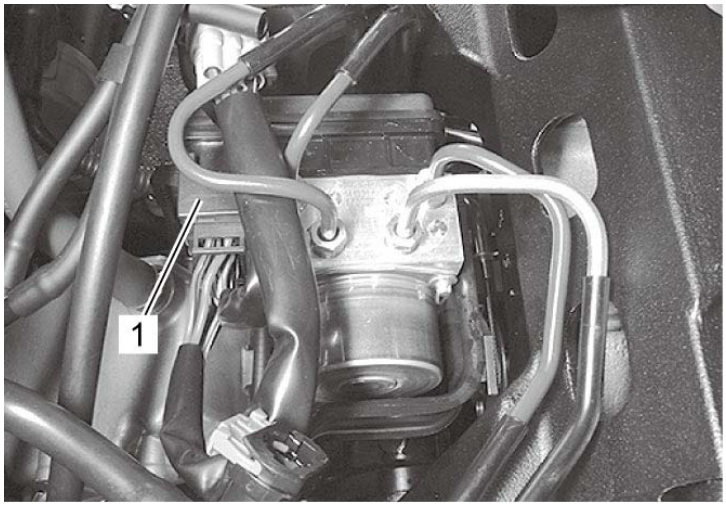

3) Measure the voltage between “T1” (R/B) and “T9” (B/W) at the coupler.

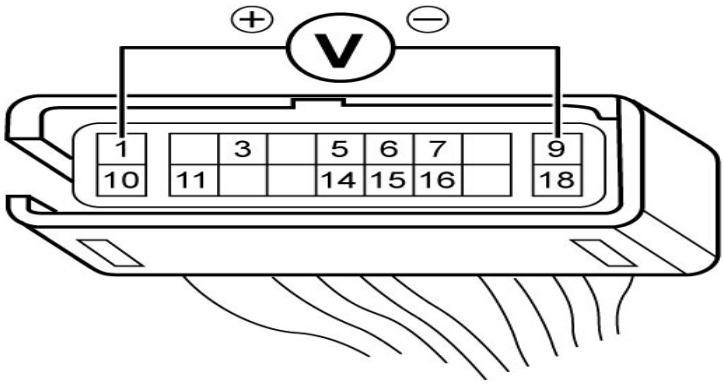

Is voltage 12.0 V or more?

DTC Table

DTC	Malfunction cause	Indicator status	Reference
None	Normal	ON *1	—
C1625 (25)	Wheel speed sensor related malfunction	ON	☞
C1635 (35)	ABS motor malfunction	ON	☞
C1641 (41)	Wheel speed sensor signal malfunction (F) *2	ON	☞
C1642 (42)	Wheel speed sensor circuit open (F) *2	ON	☞
C1644 (44)	Wheel speed sensor signal malfunction (R) *2	ON	☞
C1645 (45)	Wheel speed sensor circuit open (R) *2	ON	☞
C1647 (47)	Supply voltage (Increased)	ON *3	☞
C1648 (48)	Supply voltage (Decreased)	ON *3	☞
C1655 (55)	ABS control unit malfunction	ON *4	☞
C1661 (61)	ABS solenoid malfunction	ON	☞

*1: It goes off after running at more than 5 km/h (3.1 mile/h).

*2: The wheel speed sensor lead wire is connected to the ABS control unit, but a short-circuit or faulty continuity inside the ABS control unit caused this DTC to appear, therefore, the ABS control unit/HU assembly must be replaced. An insufficient wheel speed sensor output voltage is the cause of a malfunction in which the ABS is activated even if the brakes are not suddenly applied. If this occurs frequently even though the wheel speed sensor is operating correctly, the ABS control unit/HU assembly should be replaced.

*3: When the voltage resumes the normal level, the ABS indicator light will go off.

*4: These are times that the ABS indicator light does not light up.

NOTE:

When disconnecting couplers and turning the ignition switch ON, disconnect the ABS control unit coupler in order to prevent a DTC from being stored. Each time a resistance is measured, the ignition switch should be set to OFF.

ABS Check

Refer to the description after the following general flow for details of each step.

Step	Action	Yes	No
1	**Malfunction analysis** 1) Perform ***Customer Complaint Analysis***. 2) Perform ***Problem Symptom Confirmation***. 3) Perform ***DTC Check, Record and Clearance*** and recheck DTC. ***Is the same DTC detected again after performing the DTC clearance?***	Inspect and repair referring to the applicable DTC troubleshooting, and then go to Step 6.	Go to Step 2.
2	**Visual inspection** 1) Perform ***Visual Inspection***. ***Is there any faulty condition?***	Repair or replace the malfunction part, and then go to Step 6.	Go to Step 3.
3	**Riding test** 1) Perform ***Riding Test***. ***Is the malfunction detected?***	Repair or replace the malfunction part, and then go to Step 6.	Go to Step 4.
4	**Brakes diagnosis** 1) Inspect and repair the ABS. ☞ ***Is the malfunction detected?***	Repair or replace the malfunction part, and then go to Step 6.	Go to Step 5.
5	**Intermittent problem check** 1) Check for intermittent troubles. ☞ ***Is the malfunction detected?***	Repair or replace the malfunction part, then go to step 6.	Go to Step 6.
6	**Final confirmation test** 1) Perform ***Final Confirmation Test***. ***Does the trouble recur?***	Go to Step 4.	End.

Customer Complaint Analysis

Record details of the problem (failure, complaint) and how it occurred as described by the customer. For this purpose, use of such a questionnaire form as shown in the following table will facilitate collecting the information to the point required for the proper analysis and diagnosis.

EXAMPLE: CUSTOMER PROBLEM INSPECTION FORM

User name:	Model:	VIN:	Date of issue:
Date Reg.	Date of problem:	Mileage:	

PROBLEM SYMPTOMS	
ABS operation	Past malfunctions and repairs
ABS does not work	
ABS works so often with	
Too long stopping distance	
Other	

CONDITION WHEN MALFUNCTION OCCURRED	
ABS indicator light	Riding conditions
Does not light up	While stopping
Lights up	Over 5 km/h (3.1 mile/h)
Goes off after running over 5 km/h (3.1 mile/h): Yes / No	When turning
Flashes	Others
Tires	Brake operating conditions
Abnormal air pressure	Usual braking
Less thread depth	Quick/hard braking
No specified tires installed	
	Interface
Road surface	Too big pulsations at brake lever and pedal
Paved road: Dry / Wet / Others	Too large brake lever and pedal strokes
	Others
Unpaved road: Gravel / Muddy / Uneven / Others	
	Others
	Abnormal noise from the ABS control unit/HU
	Skid noise from the calipers
	Vibration at the brake lever and pedal
NOTE:	



NOTE:
This form is a standard sample. The form should be modified according to conditions and characteristic of each market.

Problem Symptom Confirmation

If a symptom in “Customer Questionnaire” is found or reproduced in the vehicle, confirm the symptom is problem or not. (This step should be done with the customer if possible.) Check the ABS indicator light. ☞

DTC Check, Record and Clearance

Perform ***DTC (Diagnostic Trouble Code) Output*** procedure, record it and then clear it. ☞

Recheck DTC. ☞

NOTE:
After deleting the DTC, perform *Riding Test* and then recheck the DTC.

Riding Test

Ride the motorcycle at more than 30 km/h (19 mile/h) and quickly apply the brakes to check that the ABS activates correctly.

Final Confirmation Test

Confirm that the problem symptom is not observed any more and ABS is free from any abnormal conditions. If what has been repaired is related to the malfunction DTC, clear the DTC referring to ***DTC (Diagnostic Trouble Code) Deleting*** and perform test riding and confirm that the DTC is not indicated.

ABS Components Location

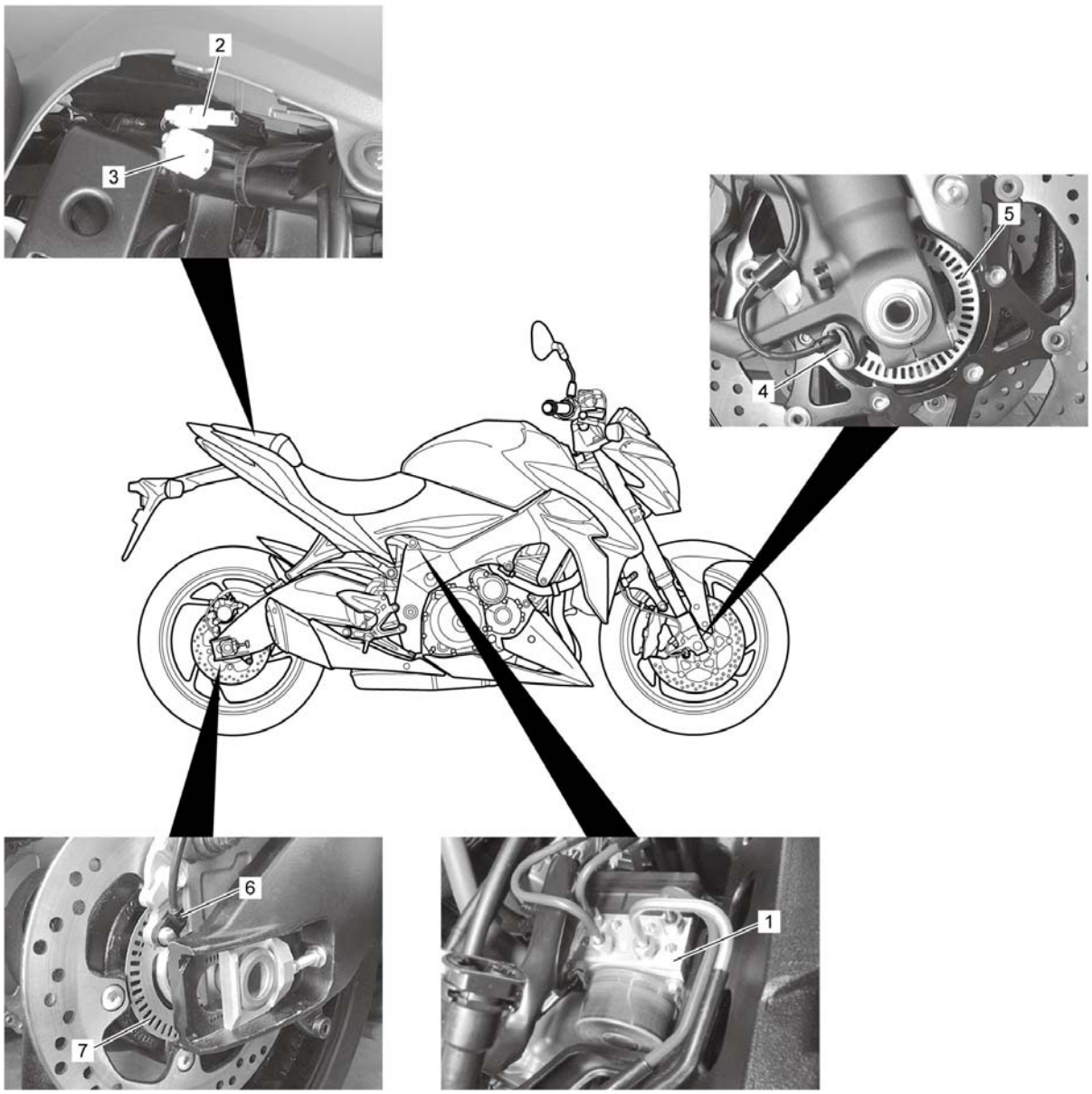

1.	ABS control unit/HU	3.	Mode select coupler (6P)	5.	Front wheel speed sensor rotor	7.	Rear wheel speed sensor rotor
2.	Mode select coupler (2P)	4.	Front wheel speed sensor	6.	Rear wheel speed sensor		

ABS Control Unit / HU Diagram

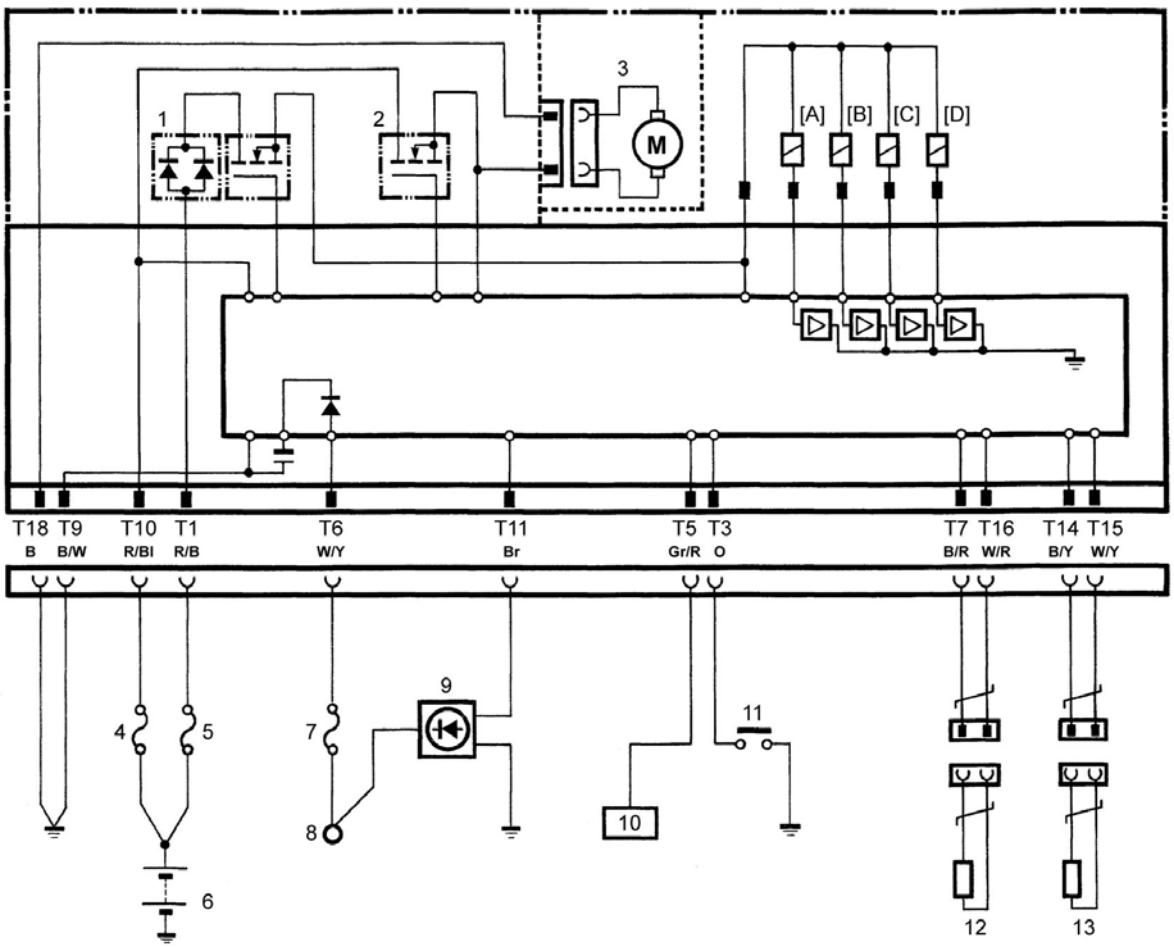

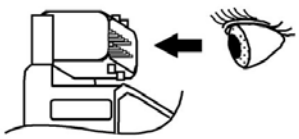

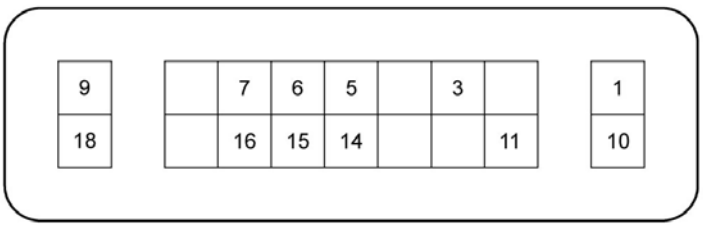

[A]:	Front brake solenoid inlet valve	3.	ABS motor	9.	ABS indicator light
[B]:	Front brake solenoid outlet valve	4.	ABS motor fuse (20 A)	10.	Mode select coupler (6P)
[C]:	Rear brake solenoid inlet valve	5.	ABS valve fuse (15 A)	11.	Mode select coupler (2P)
[D]:	Rear brake solenoid outlet valve	6.	Battery	12.	Front wheel speed sensor
1.	ABS valve relay	7.	Ignition fuse (10 A)	13.	Rear wheel speed sensor
2.	ABS motor relay	8.	Ignition switch		

Hydraulic Unit (HU) Description

The hydraulic unit operates the solenoid valves based upon the signal which is output from the ABS control unit. The brake fluid pressure is then adjusted accordingly. The hydraulic unit controls the front and rear brake systems individually by operating separate components for the front and the rear, except for the pump drive motor, which is shared by both systems.

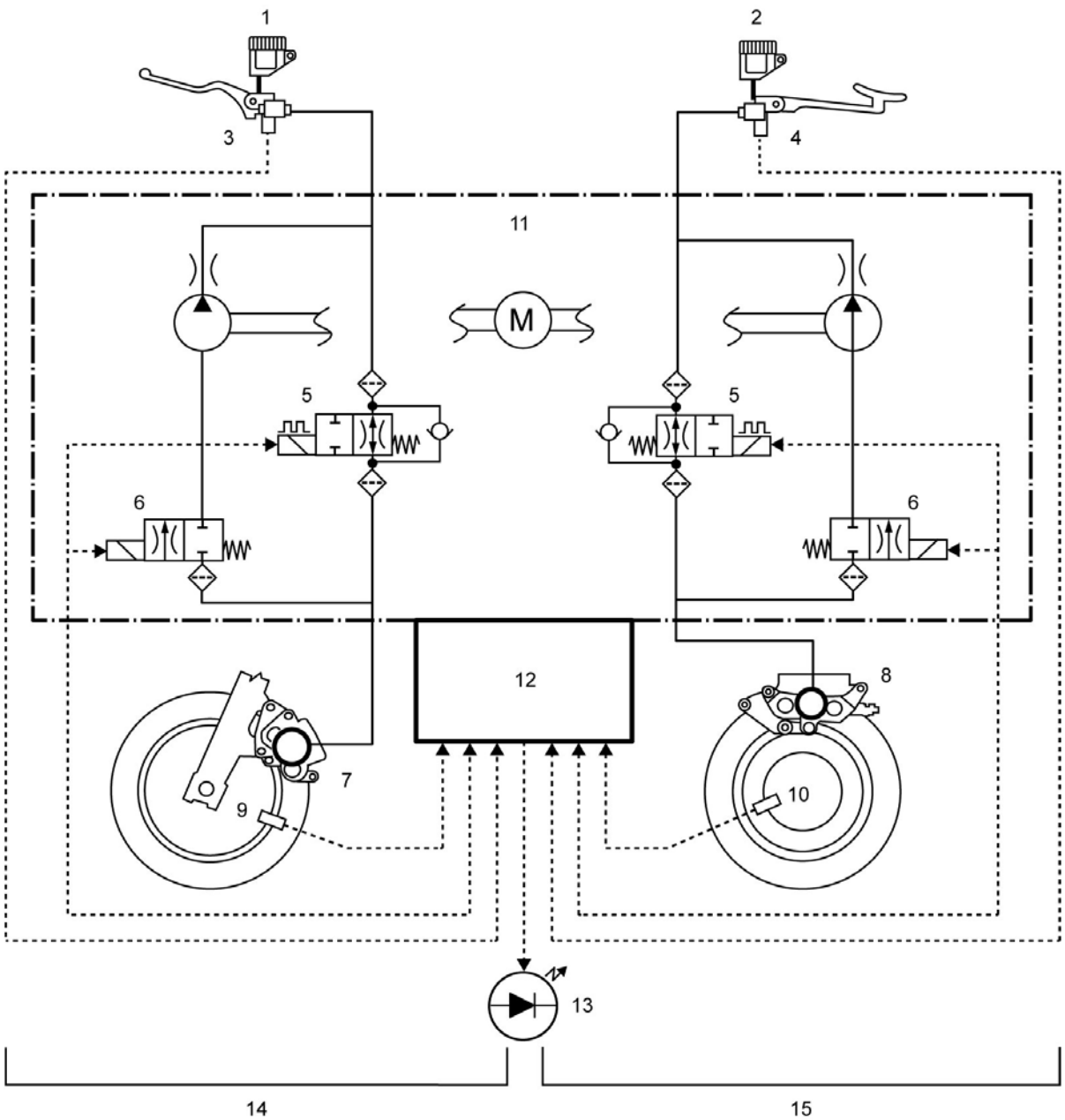

1.	Front brake lever/master cylinder	9.	Front wheel speed sensor
2.	Rear brake pedal/master cylinder	10.	Rear wheel speed sensor
3.	Front brake switch	11.	HU
4.	Rear brake switch	12.	ABS control unit

5.	Inlet valve	13.	ABS indicator light
6.	Outlet valve	14.	Front system
7.	Front brake caliper	15.	Rear system
8.	Rear brake caliper		

ABS Control Unit / HU Removal and Installation

Refer to ***Fuel Tank Removal and Installation***.

Removal

⚠WARNING:
When storing the brake fluid, seal the container completely and keep away from children.

NOTICE:
- **This brake system is filled with an ethylene glycol-based DOT 4 brake fluid. Do not mix different types of fluid such as silicone-based or petroleum-based.**
- **Do not use any brake fluid taken from old, used or unsealed containers. Never reuse brake fluid left over from the last servicing or stored for long periods.**
- **Handle brake fluid with care: the fluid reacts chemically with paint, plastics, rubber materials etc. and will damage then severely.**
- **The ABS control unit / HU cannot be disassembled.**

1) Turn the ignition switch OFF.
2) Drain the brake fluid. ☞
3) Disconnect the clamp (1) from the plate (2).

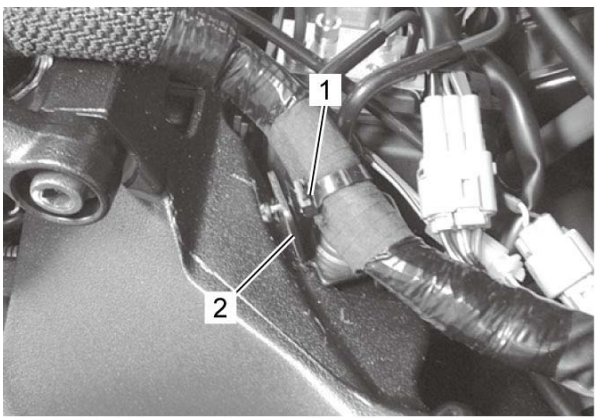

4) Disconnect the ABS control unit coupler (1). ☞
5) Loosen the flare nuts (2) and disconnect the brake pipes.

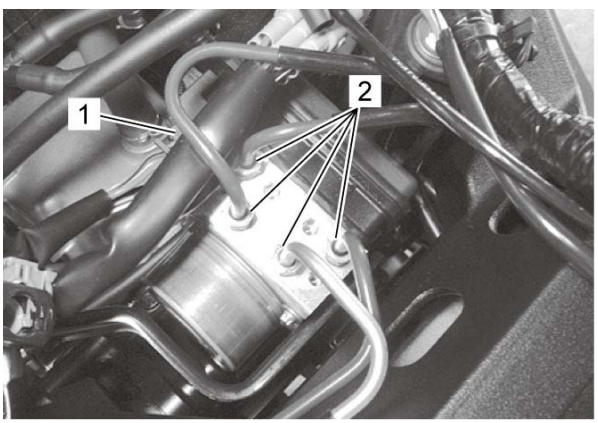

6) Remove the ABS control unit/HU assembly (1).

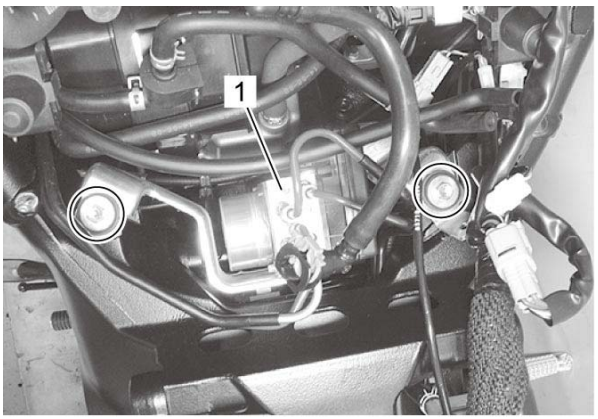

7) Remove the ABS control unit/HU (1) from the holder.

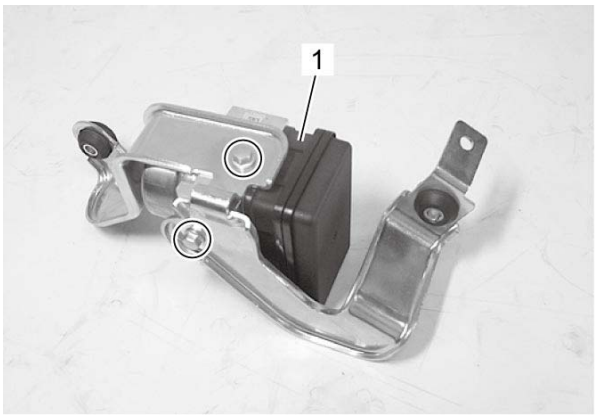

Installation

Install the ABS control unit/HU in the reverse order of removal. Pay attention to the following points:

- Make sure to hold the brake pipe when tightening the flare nut, or it may be misaligned.
- Tighten the brake pipe flare nuts (1) to the specified torque.

Tightening torque

Brake pipe flare nut (a): 16 N·m (1.6 kgf-m, 12.0 lbf-ft)

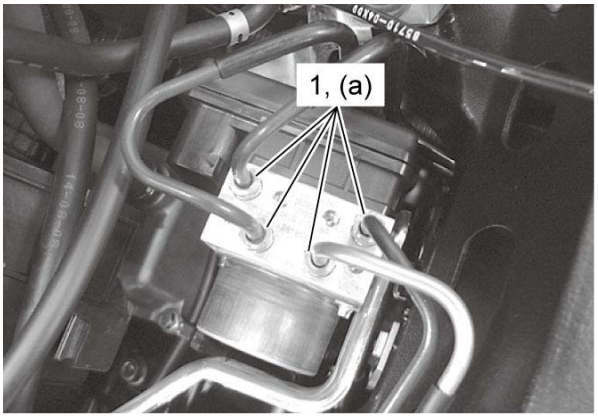

- Bleed air from the brake fluid circuit. ☞

ABS Control Unit Coupler Disconnect and Connect

Disconnect

1) Turn the ignition switch OFF.

2) Lift and support the fuel tank. ☞

3) Turn the lock lever (1) in direction of arrow until and disconnect the ABS control unit coupler (2).

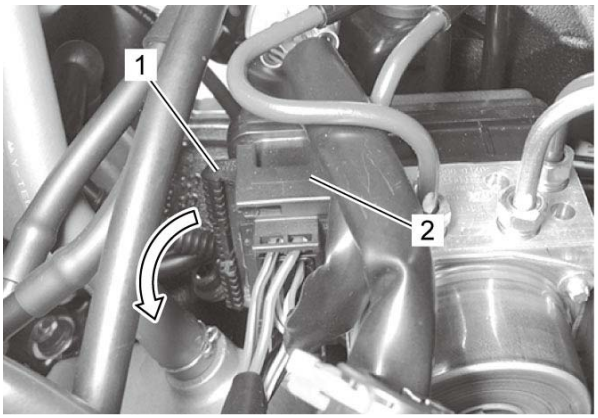

Connect

1) Make sure that lock lever (1) is in unlock position.

2) Insert the coupler (2) to ABS control unit it stop with lock lever in unlocked position.

3) Turn the lock lever in direction of arrow to lock the coupler securely.

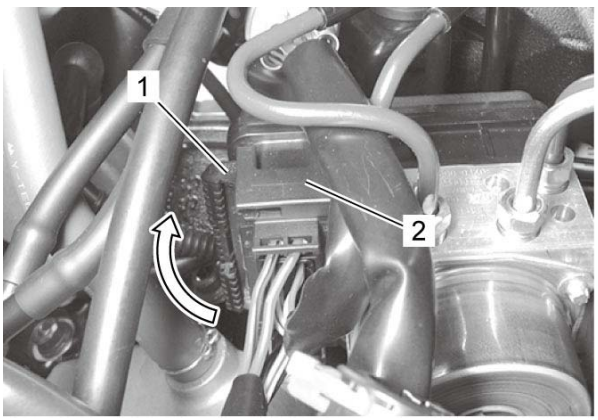

4) Install the fuel tank. ☞

ABS Control Unit Description

ABS control unit (1) calculates signals input from each one of front and rear wheel speed sensors, monitors the slipping conditions of the wheels and, at the same time, sends control signal to Hydraulic Unit (HU) (2).
This ABS control unit/HU can not be disassembled.

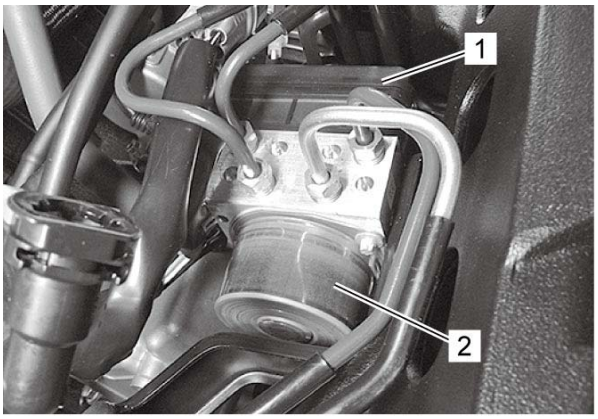

ABS Control Unit Calculating Process

The ABS controls and its calculations, in addition to the self-diagnosing and the fail-safe processes, occur during the ABS control unit calculating process. In addition, if a malfunction is detected by the self-diagnosis function, the brake stops being controlled by the ABS and a diagnostic trouble code is stored.

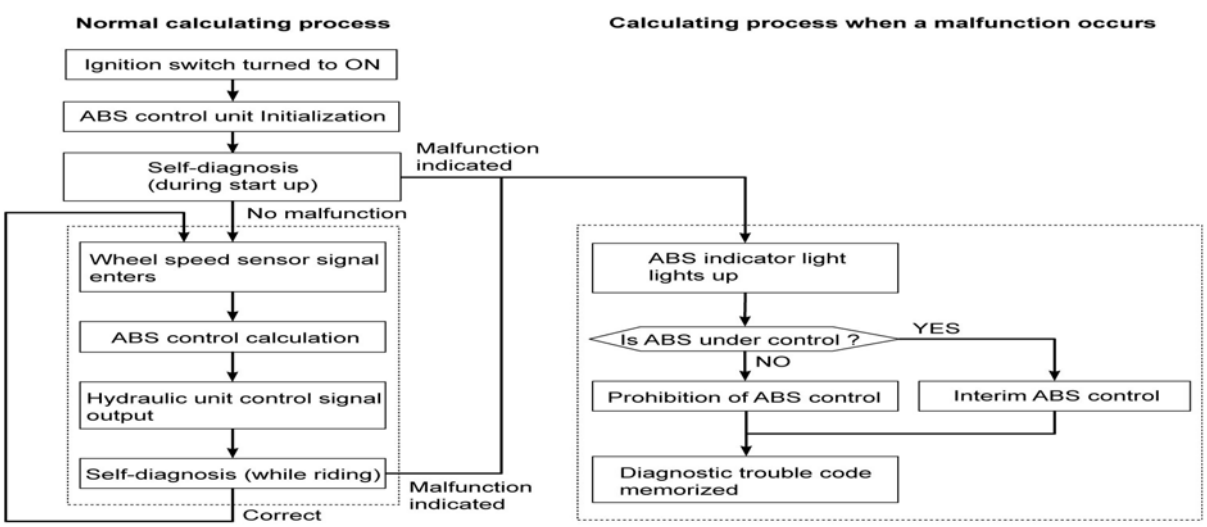

ABS Indicator Light Inspection

Wiring Diagram

Refer to ***ABS Control Unit / HU Diagram***.

Troubleshooting

Step	Action	Yes	No
1	1) Check if the ABS indicator light (1) lights up when turning the ignition switch ON. 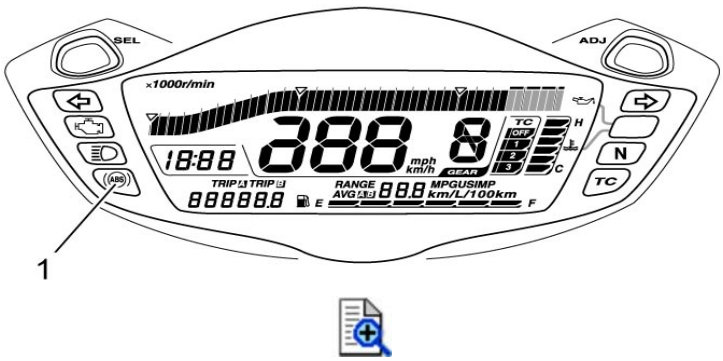 ***Does the ABS indicator light up?***	Go to Step 2.	Go to Step 3.
2	**(The ABS indicator light lights up)** 1) Ride the motorcycle at more than 5 km/h (3.1 mile/h). ***Does the ABS indicator light go off?***	Normal (No DTC exists)	• DTC output. ☞ • If DTC can not be output (the ABS indicator light does not flash), go to Step 6.
3	**(The ABS indicator light does not light up)** 1) Turn the ignition switch OFF. 2) Remove the front seat. ☞ 3) Open the fuse box and inspect the signal fuse (10 A) (1). **NOTE:** **If a fuse is blown, find the cause of the problem and correct it before replacing the fuse.**	Go to Step 4.	Replace the signal fuse.

	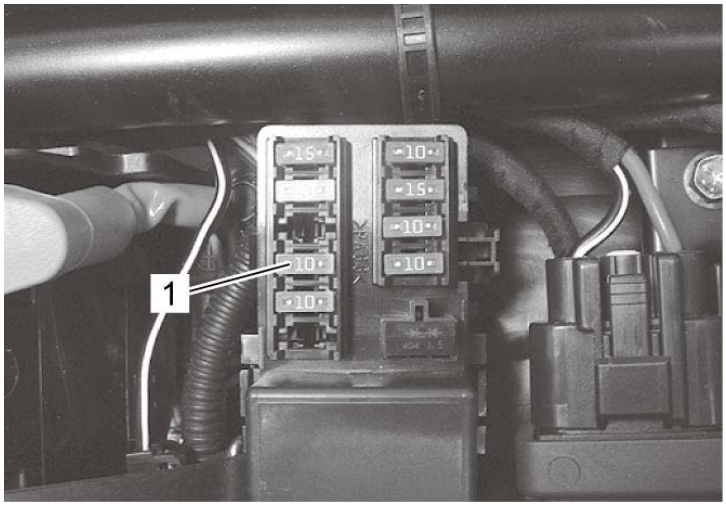 ***Is the signal fuse OK?***		
4	1) Disconnect the ABS control unit coupler. ☞ 2) Turn the ignition switch ON with the ABS control unit coupler disconnected, measure the voltage between “T11” (Br) and “T9” (B/W) at the coupler. 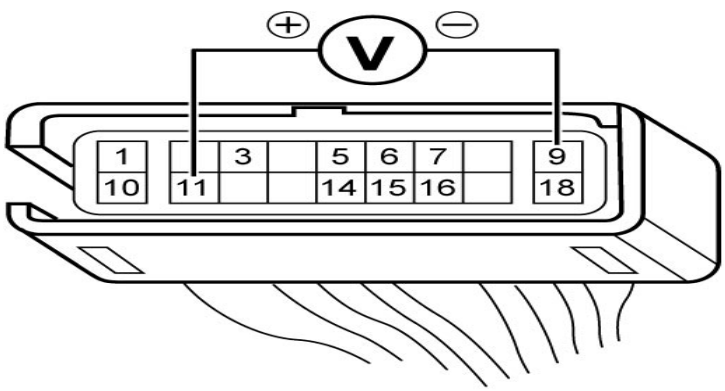 ***Is voltage 7.5 – 9.5 V?***	Go to Step 5.	• Inspect the wire harness. (Faulty indicator light wire or ground wire) • Faulty combination meter.
5	1) Turn the ignition switch OFF. 2) Check for continuity between “T9” (B/W) at the coupler and body ground. 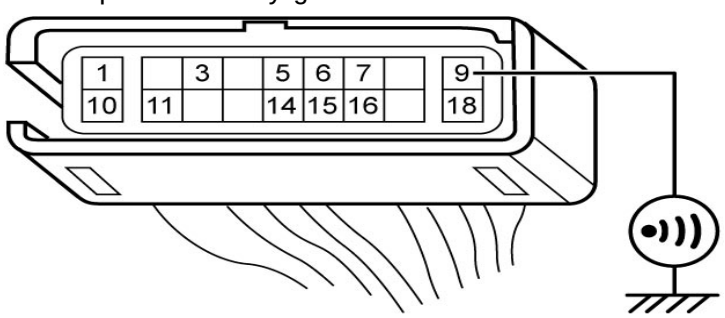 	Replace the ABS control unit/HU. ☞	Inspect the wire harness. (Faulty ground wire)

	Is continuity indicated?		
6	**(The ABS indicator light does not go off)** 1) Turn the ignition switch OFF. 2) Remove the front seat. ☞ 3) Open the fuse box and inspect the ignition fuse (10 A) (1). **NOTE:** **If a fuse is blown, find the cause of the problem and correct it before replacing the fuse.** 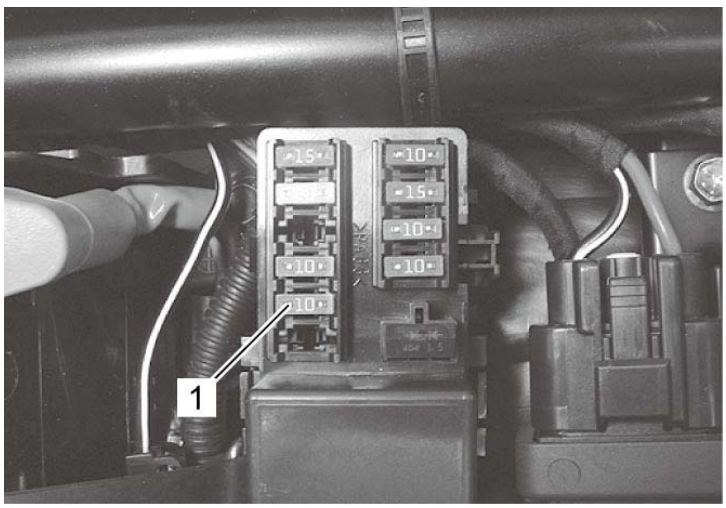 *Is the ignition fuse OK?*	Go to Step 7.	Replace the ignition fuse.
7	1) Disconnect the ABS control unit coupler. ☞ 2) Turn the ignition switch ON with the ABS control unit coupler disconnected, measure the voltage between “T6” (W/Y) terminal and “T9” (B/W) terminal at the coupler. 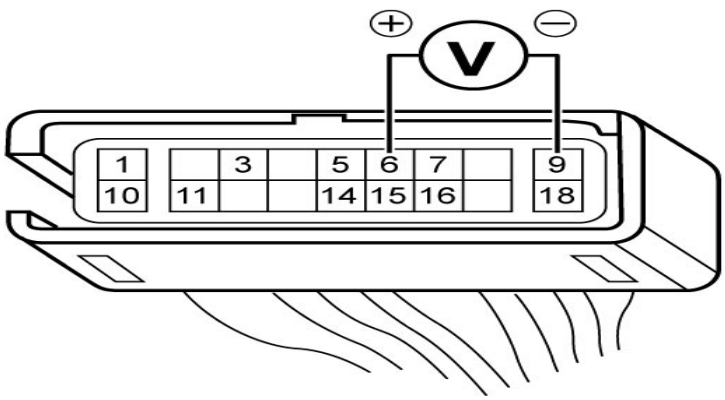 	Go to Step 8.	Inspect the wire harness. (Faulty ignition wire or ground wire)

	 ***Is the voltage 12.0 V or more?***		
8	1) Measure the voltage between “T11” (Br) terminal and “T9” (B/W) terminal at the coupler. 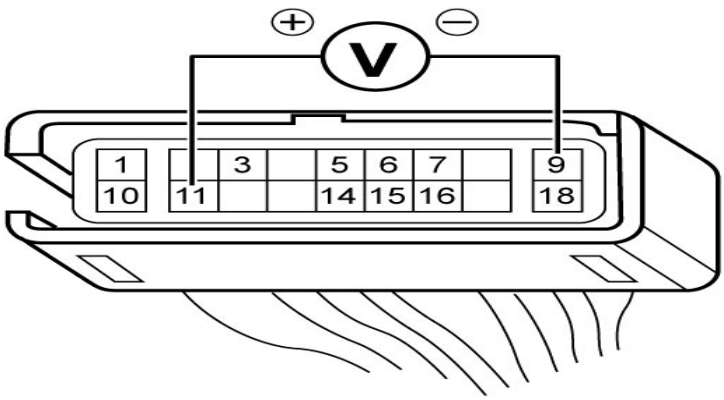  ***Is voltage 7.5 – 9.5 V?***	Go to Step 9.	Inspect the wire harness. (Faulty indicator light wire or ground wire)
9	1) Turn the ignition switch OFF. 2) Short the mode select coupler (2P) terminals using the special tool. **Special Tool** **(A): 09930–82760** 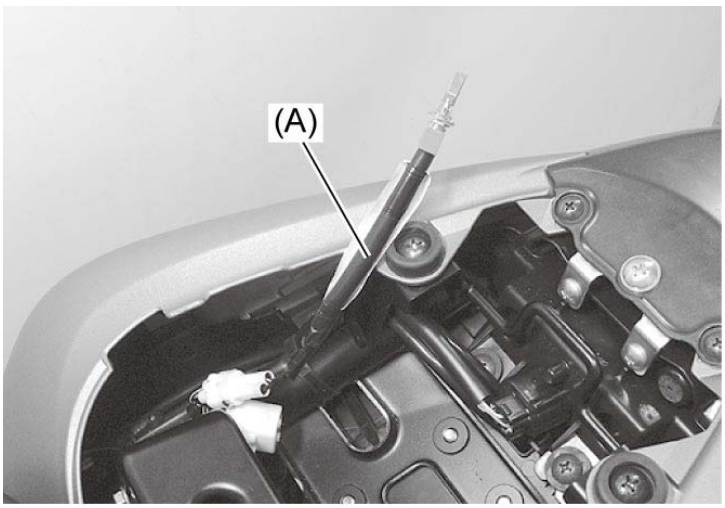  3) Check for continuity between “T3” (O) and “T9” (B/W) at the coupler.	Replace the ABS control unit/HU. ☞	Inspect the wire harness. (Faulty mode select coupler wire)

	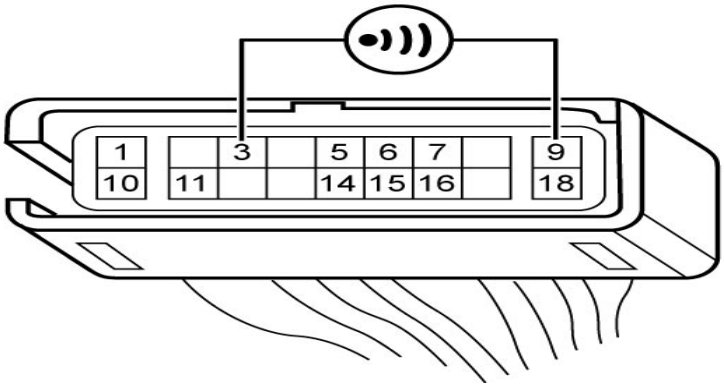 ***Is continuity indicated?***		

Fail-safe Function Description

If malfunction occurs in the ABS electric system, this sets valve relay OFF. Consequently, motor relay will be set OFF and the indicator light ON, and no current will be applied to motor solenoid valve inactivating ABS and turning ABS indicator light ON. In this case, it functions as the normal brake. However, if malfunctions occurs while ABS is being activated, when ABS control unit diagnoses that the operation can continue, it will effectuate ABS provisional control (turning the ABS indicator light ON). Upon the moment when ABS provisional control is over, the valve relay will be set OFF.

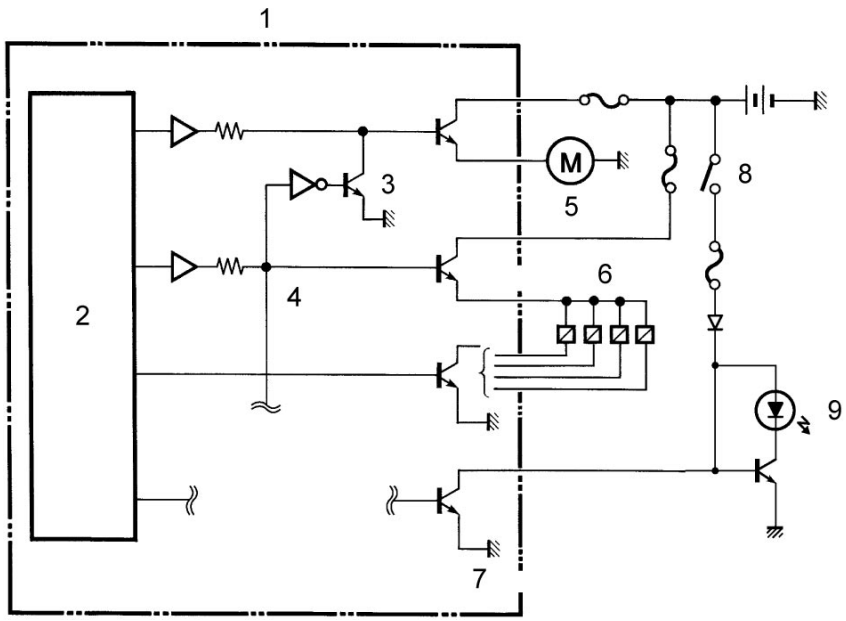

1.	ABS control unit	4.	Valve relay	7.	Indicator relay
2.	CPU	5.	Motor	8.	Ignition switch
3.	Motor relay	6.	Solenoid valves	9.	ABS indicator light

Front Wheel Speed Sensor Removal and Installation

Refer to ***Front Wheel Speed Sensor Routing Diagram***.

Removal

1) Turn the ignition switch OFF.

2) Lift and support the fuel tank. ☞

3) Disconnect the front wheel speed sensor lead wire coupler (1).

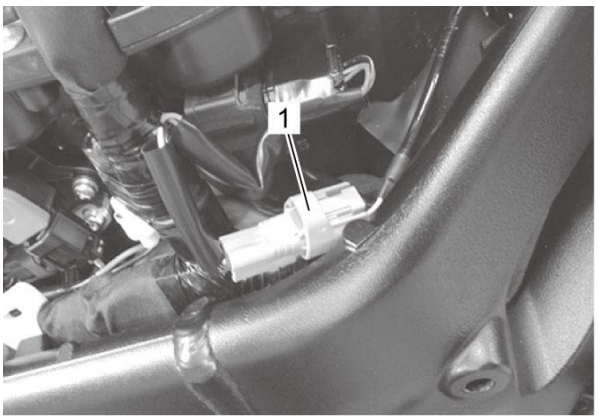

4) Remove the front wheel speed sensor mounting bolt (1).

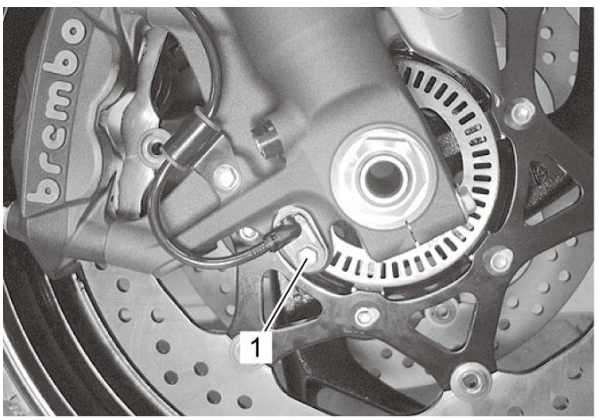

5) Remove the front wheel speed sensor.

Installation

Reference: Wheel Speed Sensor and Sensor Rotor Inspection

Install the front wheel speed sensor in the reverse order of removal. Pay attention to the following point:

- After installing the front wheel speed sensor, check the clearance between the front wheel speed sensor and sensor rotor. Refer to ***Wheel Speed Sensor and Sensor Rotor Inspection***.

Front Wheel Speed Sensor Rotor Removal and Installation

Refer to ***Front Wheel Assembly Removal and Installation***.

NOTICE:
- **Do not hit the front wheel speed sensor rotor when dismounting the front wheel.**
- **When replacing the tire, make sure not to damage the sensor rotor.**

Removal

1) Remove the front wheel speed sensor rotor (1).

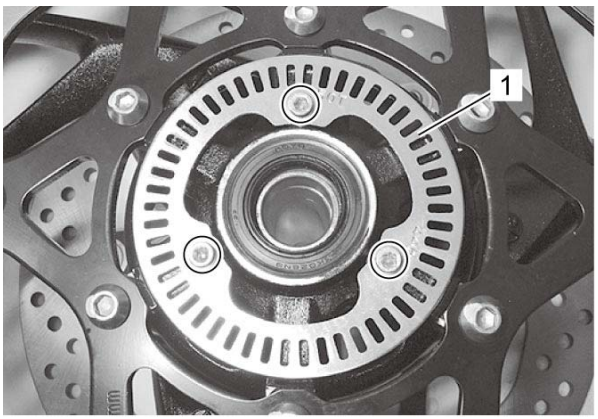

Installation

Reference: Wheel Speed Sensor and Sensor Rotor Inspection

1) Install the wheel speed sensor rotor as the letters “50T” face outside.

2) Tighten the front wheel speed sensor rotor bolts (1) to the specified torque.

Tightening torque

Wheel speed sensor rotor bolt (a): 6.5 N·m (0.66 kgf-m, 4.80 lbf-ft)

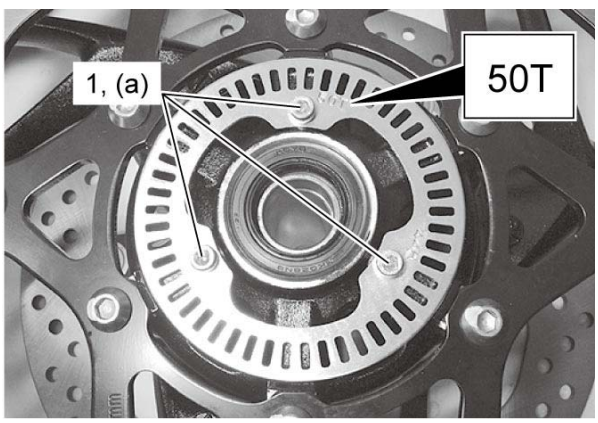

3) After installing the front wheel, check the clearance between the front wheel speed sensor and sensor rotor. Refer to ***Wheel Speed Sensor and Sensor Rotor Inspection***.

Front Wheel Speed Sensor Routing Diagram

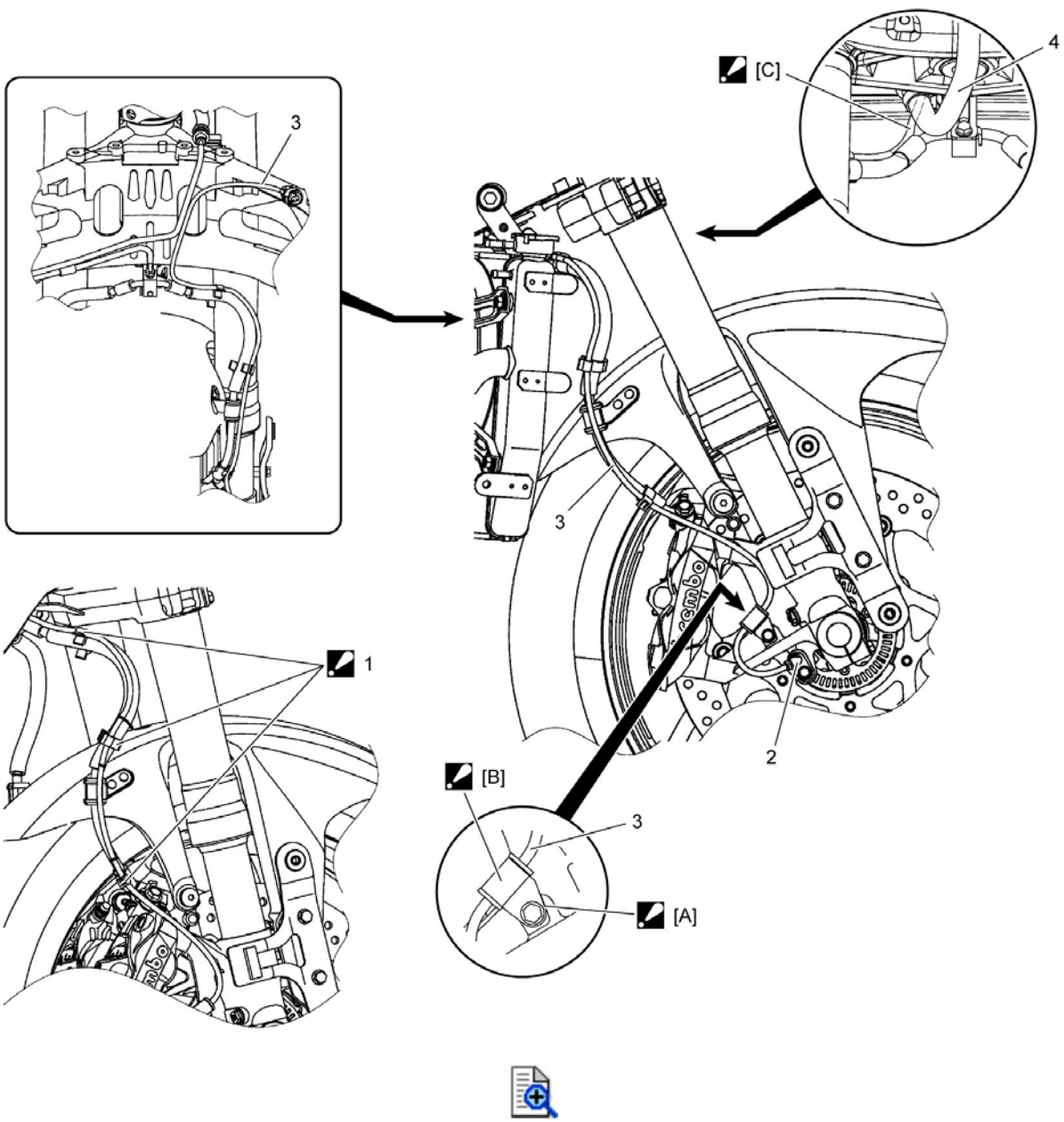

[A]:	After the stopper of clamp has contacted the bracket of front fork inner tube, tighten the bolt.	2.	Front wheel speed sensor
[B]:	Fix the front wheel speed sensor lead wire sleeve to the clamp firmly.	3.	Front wheel speed sensor lead wire
[C]:	Pass the front wheel speed sensor lead wire to the under and left side of the wiring harness.	4.	Wiring harness
1.	Clamp : Clamp the marking of the front wheel speed sensor lead wire.		

Rear Wheel Speed Sensor Removal and Installation

Refer to ***Rear Wheel Speed Sensor Routing Diagram***.

Removal

1) Turn the ignition switch OFF.

2) Lift and support the fuel tank.

3) Disconnect the rear wheel speed sensor lead wire coupler (1).

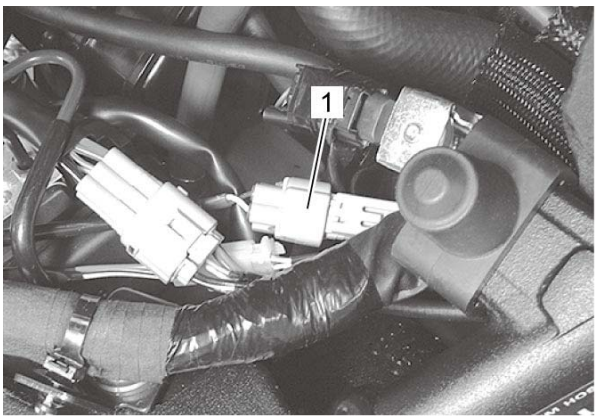

4) Remove the rear wheel speed sensor bracket (1).

5) Remove the pin (2).

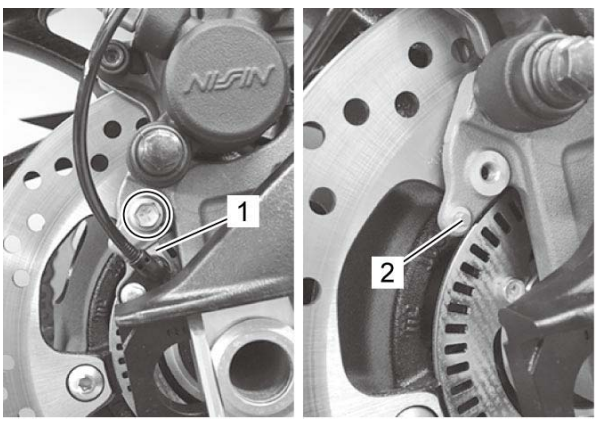

6) Remove the rear wheel speed sensor (1).

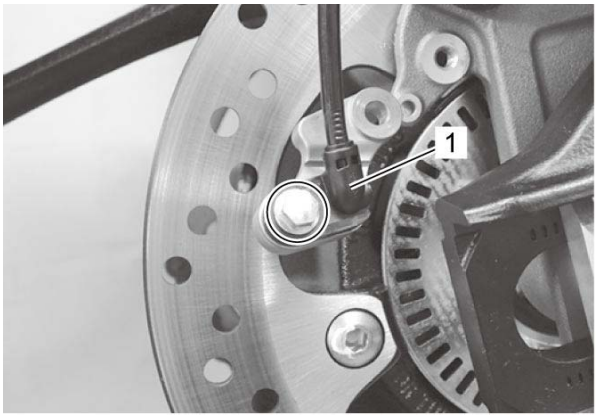

Installation

Reference: Wheel Speed Sensor and Sensor Rotor Inspection

Install the rear wheel speed sensor in the reverse order of removal. Pay attention to the following points:

- Apply thread lock to the rear wheel speed sensor bracket bolt (1) and tighten it.

  “A”: Thread lock cement 99000–32150 (THREAD LOCK CEMENT 1322D)

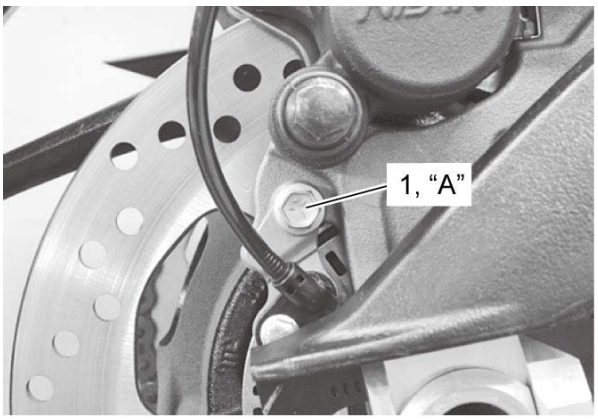

- After installing the rear wheel speed sensor, check the clearance between the rear wheel speed sensor and sensor rotor. Refer to ***Wheel Speed Sensor and Sensor Rotor Inspection***.

Rear Wheel Speed Sensor Rotor Removal and Installation

Refer to ***Rear Wheel Assembly Removal and Installation***.

NOTICE:
- **Do not hit the rear wheel speed sensor rotor when dismounting the rear wheel.**
- **When replacing the tire, make sure not to damage the sensor rotor.**

Removal

1) Remove the rear wheel speed sensor rotor (1) by removing the bolts.

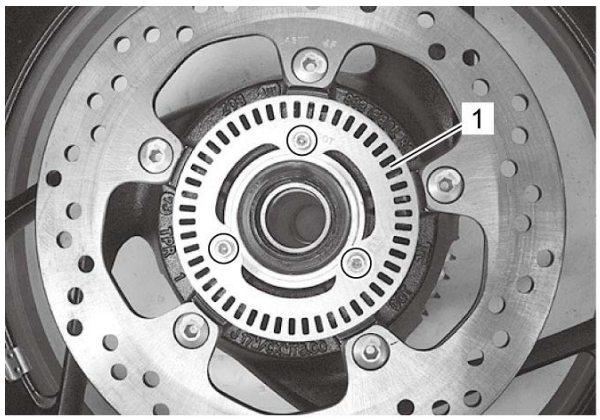

Installation

Reference: Wheel Speed Sensor and Sensor Rotor Inspection

1) Install the wheel speed sensor rotor as the letters “50T” face outside.

2) Tighten the rear wheel speed sensor rotor bolts (1) to the specified torque.

Tightening torque

Wheel speed sensor rotor bolt (a): 6.5 N·m (0.66 kgf-m, 4.80 lbf-ft)

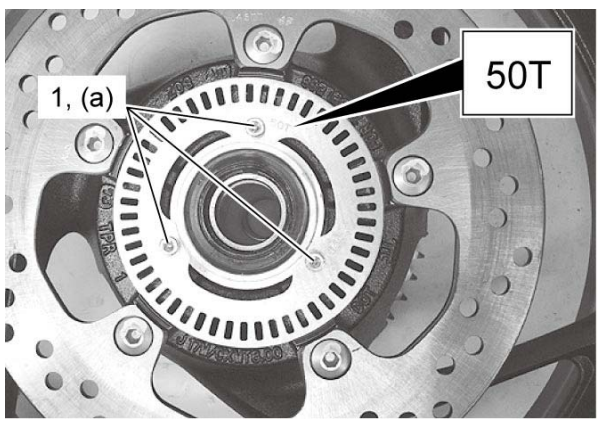

3) After installing the rear wheel, check the clearance between the rear wheel speed sensor and sensor rotor. Refer to ***Wheel Speed Sensor and Sensor Rotor Inspection***.

Rear Wheel Speed Sensor Routing Diagram

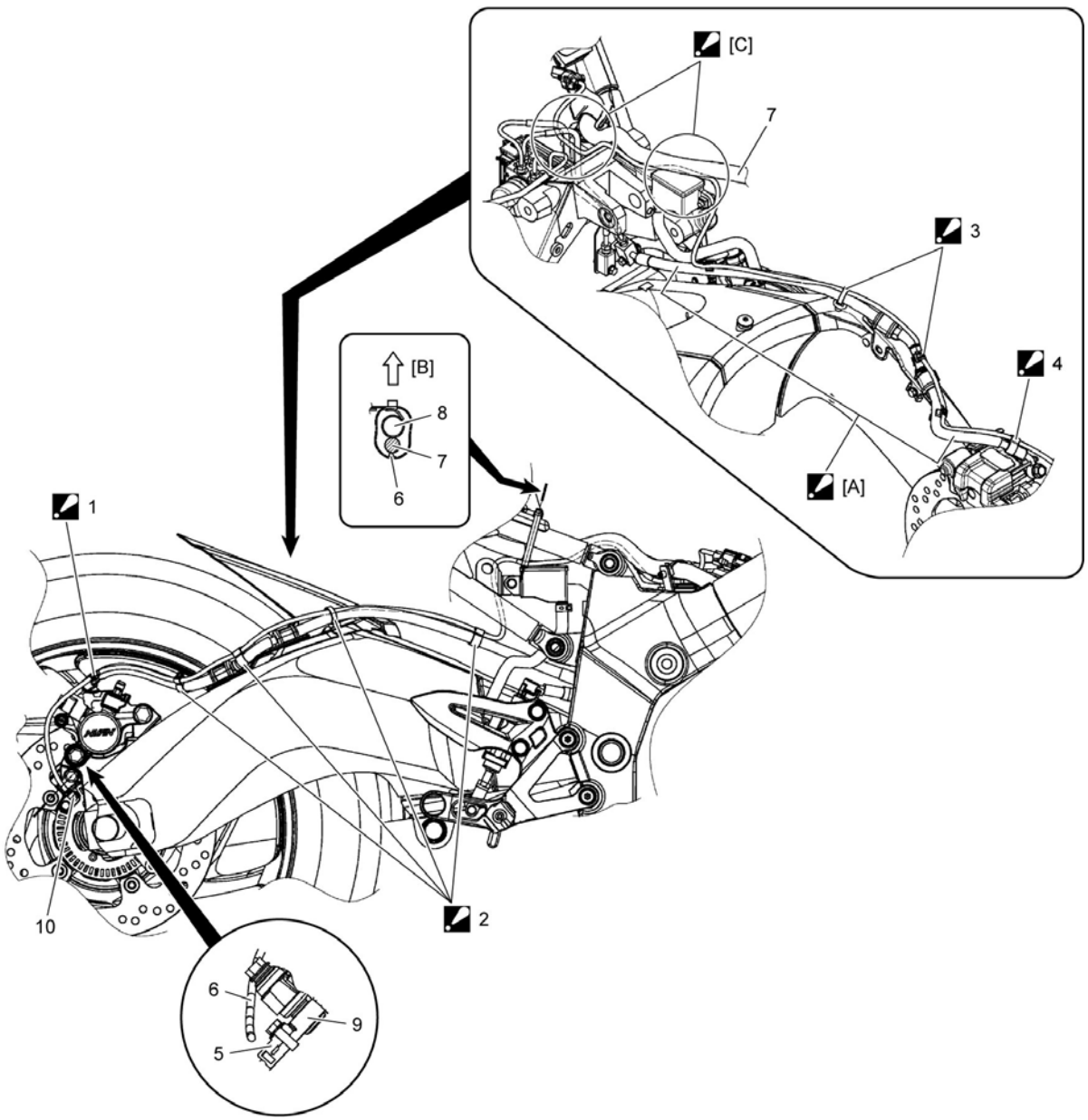

[A]:	Do not make slacked part.	5.	Rear wheel speed sensor bracket
[B]:	Upward	6.	Rear wheel speed sensor lead wire
[C]:	Pass the rear wheel speed sensor lead wire under the wiring harness and rear brake hose.	7.	Wiring harness
1.	Clamp : Clamp the marking of the rear wheel speed sensor lead wire at the outside of the brake hose union.	8.	Seat rail

 2.	Clamp : Clamp the marking of the rear wheel speed sensor lead wire.	9.	Rear brake caliper
 3.	Clamp : Clamp the rear wheel speed sensor lead wire at the upper side of the brake hose.	10.	Rear wheel speed sensor
 4.	Clamp : Clamp the rear wheel speed sensor lead wire at the outside of the brake hose.		

Self-diagnosis Function and ABS Indicator Light Description

The ABS control unit performs the self-diagnosis and can store any electronically detected malfunctions as diagnostic trouble codes. If a malfunction has occurred, the indicator light lights up to inform the rider of the malfunction. The special tool, when connected to the mode select coupler (2P), enables the ABS indicator light to display the diagnostic trouble codes.

ABS Indicator Light

The ABS indicator light (1) informs the rider of any ABS malfunctions. If a malfunction occurred, the ABS indicator light flashes, during the self-diagnosis, to indicate the diagnostic trouble code so that the correct part can be repaired.

- When the ignition switch is turned to ON, the ABS indicator light lights up even if no malfunction has occurred, to indicate that the LED is not burnt out. It will go off after the motorcycle is ridden at more than 5 km/h (3.1 mile/h).
- If an ABS malfunction has occurred, the ABS indicator light keeps lighting up.

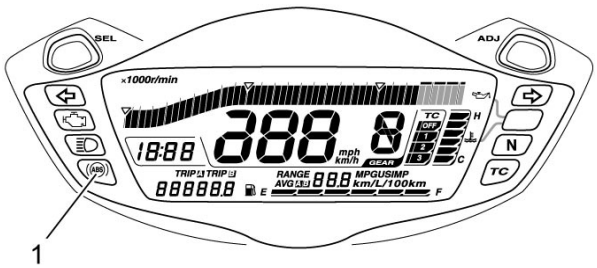

NOTE:
When a malfunction has occurred in the ABS, connect the special tool to the mode select coupler (2P) to display the diagnostic trouble code on the ABS indicator light.

Special Tool

(A): 09930–82760

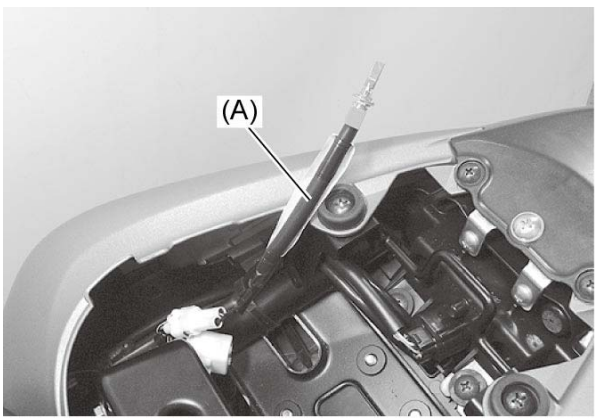

ABS Operation and ABS Indicator Light

The ABS indicator light (1) shows the ABS operating condition. During normal operation, the ABS indicator light lights up when the ignition switch is turned to ON and goes off after the motorcycle is ridden at more than 5 km/h (3.1 mile/h). If a malfunction has occurred, the ABS indicator light keeps lighting up.

The ABS indicator light goes off when the motorcycle is ridden at more than 5 km/h (3.1 mile/h).	The ABS is normally activated.
The ABS indicator light keeps lighting up even though the motorcycle is ridden at more than 5 km/h (3.1 mile/h).	One or more malfunction has been found and ABS activation been hanged up.
The ABS indicator light does not light up when turning the ignition switch ON.	Check the wire harness and combination meter. ☞

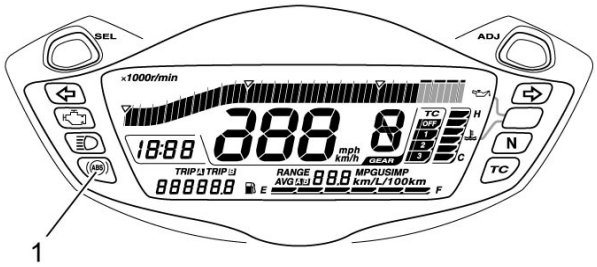

Stored DTCs (Diagnostic Trouble Codes)

The maximum of six DTCs can be recorded. In these records, duplication of the same DTC will not occur. If the system detects the 7th DTC, it overwrites the record of the oldest DTC.
Check and see if any diagnostic trouble code remains, by actually running the machine to activate ABS and by carrying out the self-diagnosis after deleting the diagnostic trouble code once the malfunctioned part is repaired.

Visual Inspection

Check the following parts and systems visually.

Inspection Item		Referring Section
Connectors of electric wire harness	Disconnection, friction	***Precautions for Electrical Circuit Service***
Fuses	Burning	***Precautions for Electrical Circuit Service***
Brake pad	Worn	***Front Brake Pad Inspection*** and ***Rear Brake Pad Inspection***
Brake fluid	Level, leakage	***Brake Fluid Level Check***
ABS indicator light	Operation	***ABS Indicator Light Inspection***
Tire	Pressure	***Tire Inspection and Cleaning***
	Type, size	***Tire Inspection and Cleaning***
	Damage, wear	***Tire Inspection and Cleaning***
Wheel	Runout, play	***Wheel / Wheel Axle Inspection***
Other parts that can be checked visually		—

NOTICE:

- **The standard tire fitted on this motorcycle is 120/70ZR17M/C (58W) for front and 190/50ZR17M/C (73W) for rear. The use of tires other than those specified may cause instability. It is highly recommended to use a SUZUKI Genuine Tire.**
- **Replace the tire as a set, otherwise the DTC C1625 (25) may be stored.**

Wheel Speed Sensor and Sensor Rotor Inspection

Wheel Speed Sensor – Sensor Rotor Clearance

Check the clearance between the wheel speed sensor (1) and sensor rotor (2) using the thickness gauge.

Special Tool

(A): 09900–20803
(B): 09900–20806

Wheel speed sensor – Sensor rotor clearance

Front [Standard]: 0.38 – 1.05 mm (0.0150 – 0.0413 in)
Rear [Standard]: 0.42 – 1.08 mm (0.0166 – 0.0425 in)

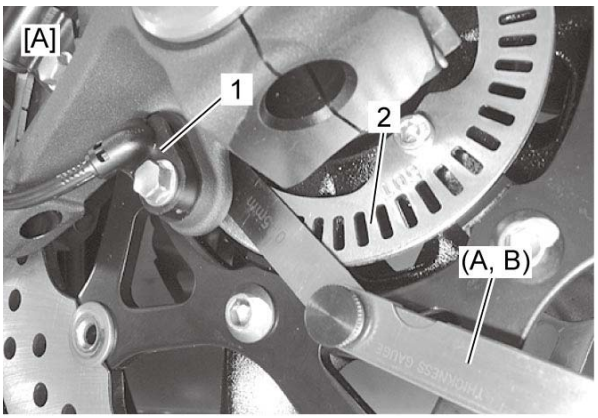

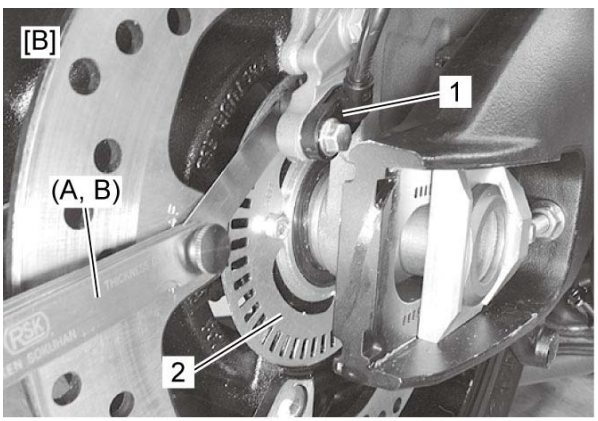

[A]:	Front	[B]:	Rear

Wheel Speed Sensor

1) Remove the wheel speed sensor.
- Front: ☞

- Rear: ☞

2) Inspect the wheel speed sensor for damage.
Clean the sensor if any metal particle or foreign material stuck on it.



3) After finishing the speed sensor inspection, install the wheel speed sensor.
- Front: ☞
- Rear: ☞

Wheel Speed Sensor Current

1) Disconnect the wheel speed sensor coupler.
- Front: ☞
- Rear: ☞

2) Connect three 1.5 V dry cells (1) in series as shown and make sure that their total voltage is more than 4.5 V. Measure the current between (+) dry cells terminal and (2) (W) on the wheel speed sensor coupler.

Normal value

5.9 – 16.8 mA

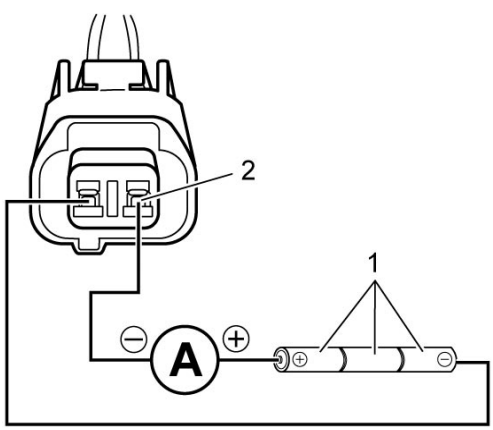

3) Install the removed parts.

Wheel Speed Sensor Rotor

1) Raise the wheel off the ground and support the motorcycle with a jack or wooden block.

2) Check that no wheel speed sensor rotor teeth are broken and that no foreign objects are caught in the wheel speed sensor. If any defects are found, replace the wheel speed sensor rotor with a new one.

- Front: ☞
- Rear: ☞

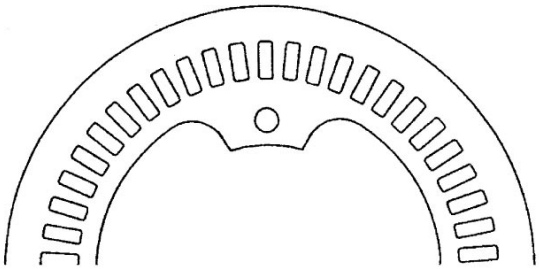

Wheel Speed Sensor Description

Wheel speed sensor consists of wheel speed sensor (1) and sensor rotor (2).

Front

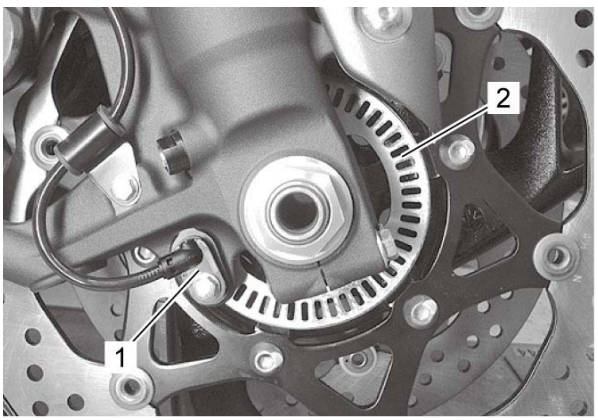

Rear

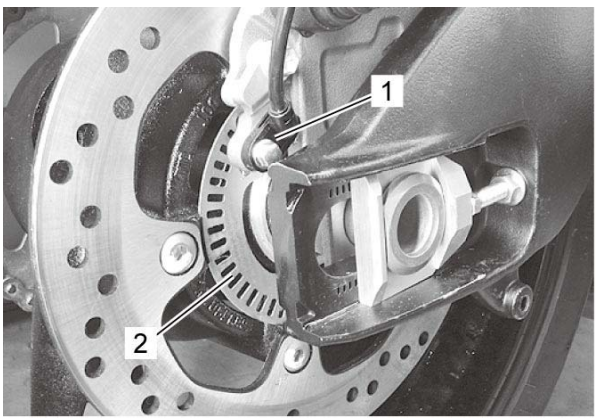

Tightening Torque Specifications

Fastening part	Tightening torque			Note
	N·m	kgf-m	lbf-ft	
Wheel speed sensor rotor bolt	6.5	0.66	4.80	☞ ☞
Brake pipe flare nut	16	1.6	12.0	☞

Reference:
For the tightening torques of fasteners not specified in this page, refer to:
Fasteners Information

Recommended Service Material

Material	SUZUKI recommended product or Specification		Note
Thread lock cement	THREAD LOCK CEMENT 1322D	P/No.: 99000–32150	☞

Special Tool

09900–20803 Thickness gauge ☞	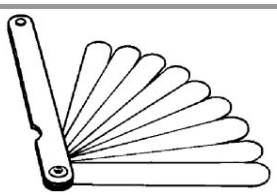	09900–20806 Thickness gauge ☞	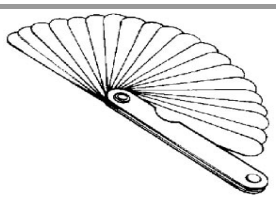
09930–82760 Mode selection switch ☞ ☞ ☞			

Suspension and Wheel Symptom Diagnosis

Condition	Possible Cause	Action
Wobbly front wheel	Distorted wheel rim.	*Replace.* ☞
	Worn front wheel bearings.	*Replace.* ☞
	Defective or incorrect tire.	*Replace.* ☞
	Loose front axle nut.	*Tighten.* ☞
	Loose front axle pinch bolts.	*Tighten.* ☞
	Incorrect fork oil level.	*Adjust.* ☞
	Incorrect front wheel weight balance.	*Adjust.* ☞
Front suspension too soft	Insufficiently viscous fork oil.	*Replace.* ☞
	Insufficient fork oil.	*Check level and add.* ☞
	Weak spring.	*Replace.* ☞
	Improperly set front fork spring adjuster.	*Adjust.* ☞
	Improperly set front fork damping force adjuster.	*Adjust.* ☞
Front suspension too stiff	Excessively viscous fork oil.	*Replace.* ☞
	Excessive fork oil.	*Check level and drain.* ☞
	Bent front axle.	*Replace.* ☞
	Improperly set front fork spring adjuster.	*Adjust.* ☞
	Improperly set front fork damping force adjuster.	*Adjust.* ☞
Front suspension too noisy	Insufficient fork oil.	*Check level and add.* ☞
	Loose front fork clamp bolt.	*Tighten.* ☞
Wobbly rear wheel	Distorted wheel rim.	*Replace.* ☞
	Worn rear wheel bearings.	*Replace.* ☞
	Defective or incorrect tire.	*Replace.* ☞
	Worn swingarm bearings.	*Replace.* ☞
	Loose rear suspension related bolt and nut.	*Tighten.* ☞
	Loose rear axle nut.	*Tighten.* ☞
	Worn rear suspension bearings.	*Replace.* ☞
	Incorrect rear wheel weight balance.	*Adjust.* ☞
Rear suspension too soft	Weak rear shock absorber spring.	*Replace.* ☞
	Rear shock absorber leaks oil.	*Replace.* ☞

	Improperly set rear shock absorber spring adjuster.	*Adjust.* ☞
	Improperly set rear shock absorber damping force adjuster.	*Adjust.* ☞
Rear suspension too stiff	Bent rear shock absorber shaft.	*Replace.* ☞
	Worn swingarm bearings.	*Replace.* ☞
	Worn rear suspension bearings.	*Replace.* ☞
	Bent swingarm pivot shaft.	*Replace.* ☞
	Improperly set rear shock absorber spring adjuster.	*Adjust.* ☞
	Improperly set rear shock absorber damping force adjuster.	*Adjust.* ☞
Rear suspension too noisy	Loose rear suspension related bolt and nut.	*Tighten.* ☞
	Worn swingarm bearings.	*Replace.* ☞
	Worn rear suspension bearings.	*Replace.* ☞

Front Fork Components

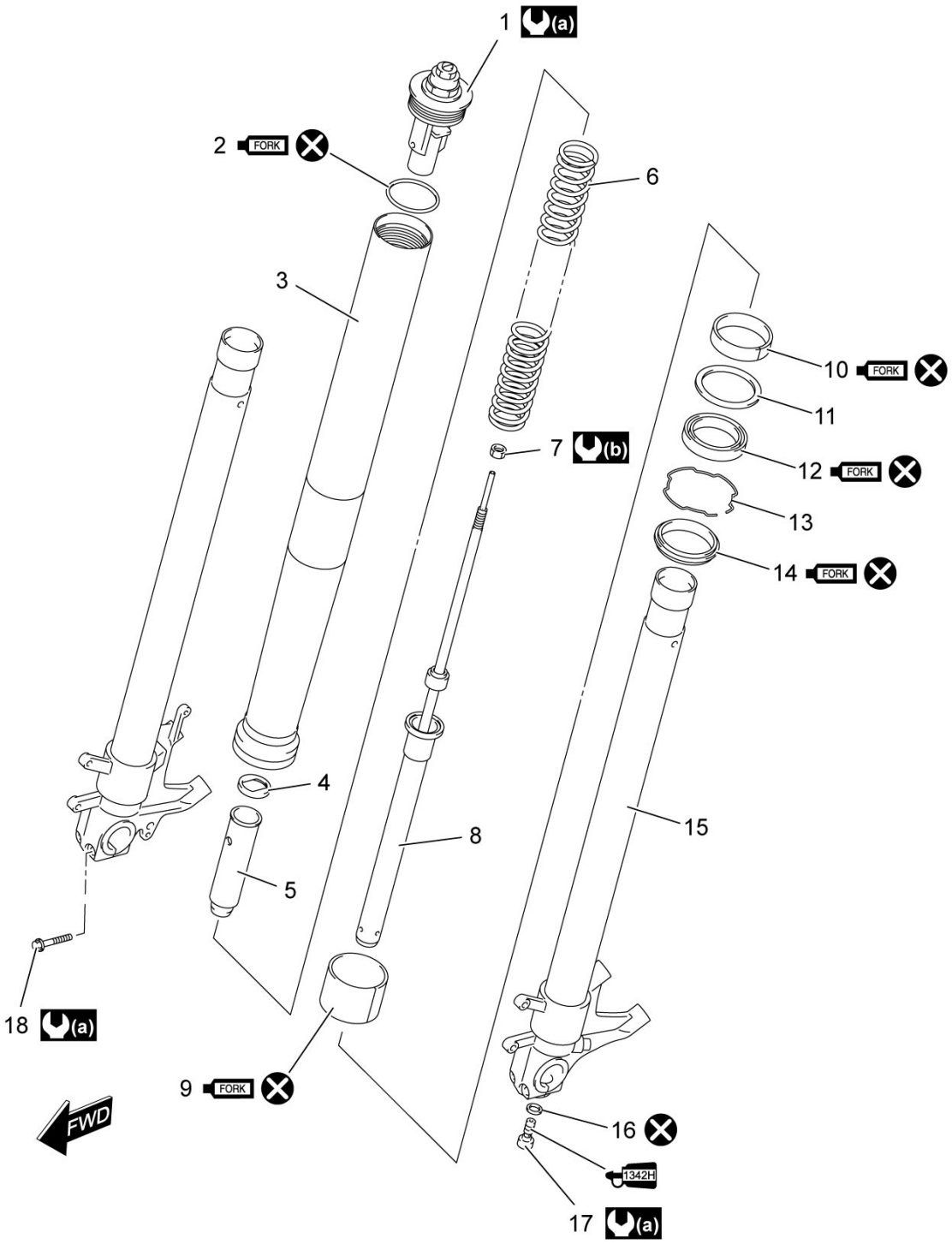

1.	Front fork cap bolt	9.	Inner tube slide metal	17.	Damper rod bolt
2.	O-ring	10.	Outer tube slide metal	18.	Front axle pinch bolt

3.	Outer tube	11.	Oil seal retainer	(a):	23 N·m (2.3 kgf-m, 17.0 lbf-ft)
4.	Spring retainer	12.	Oil seal	(b):	15 N·m (1.5 kgf-m, 11.0 lbf-ft)
5.	Spacer	13.	Oil seal stopper ring	1342H:	Apply thread lock to the thread part.
6.	Spring	14.	Dust seal	FORK:	Apply fork oil.
7.	Lock-nut	15.	Inner tube	:	Do not reuse.
8.	Inner rod/damper rod	16.	Gasket		

Front Fork Assembly Removal and Installation

Reference: Front Fork Components

NOTE:
The right and left front forks are installed symmetrically and therefore the removal procedure for one side is the same as that for the other side.

Removal

1) For GSX-S1000/A, remove the rear body cowling. ☞
2) Remove the front wheel. ☞
3) Remove the reflex reflectors (If equipped). Refer to ***Reflex Reflector Construction (If Equipped)***.
4) Remove the front wheel speed sensor lead wire clamp bolt (1).
5) Disconnect the brake hoses from the clamps (2) on the front fender.
6) Remove the front fender (3).

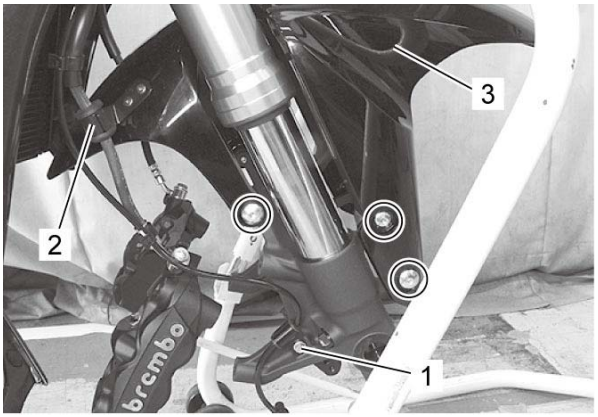

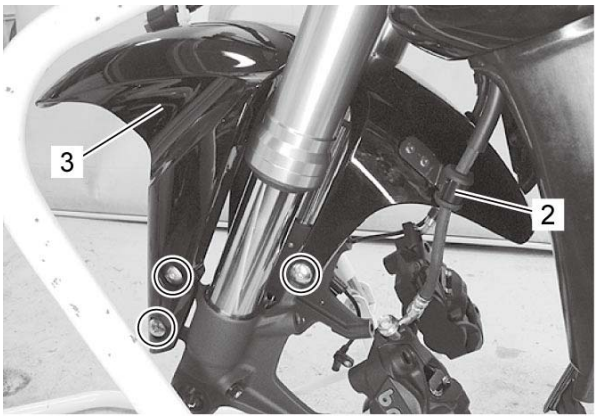

7) Loosen the front fork upper clamp bolt (1).

NOTE:
Slightly loosen the front fork cap bolt (2) to facilitate later disassembly.

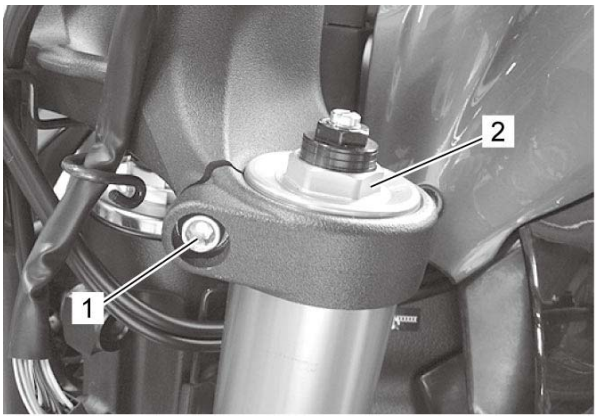

8) Loosen the front fork lower clamp bolts (1), and then remove the front fork (2) by supporting it.

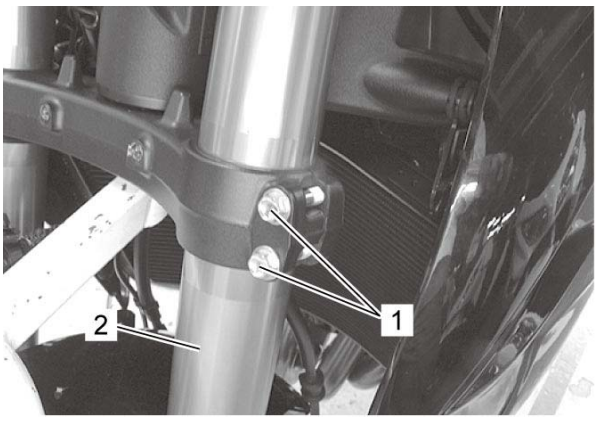

Installation

1) Set the front fork (1) to the steering stem lower bracket temporarily by tightening the front fork lower clamp bolts (2).

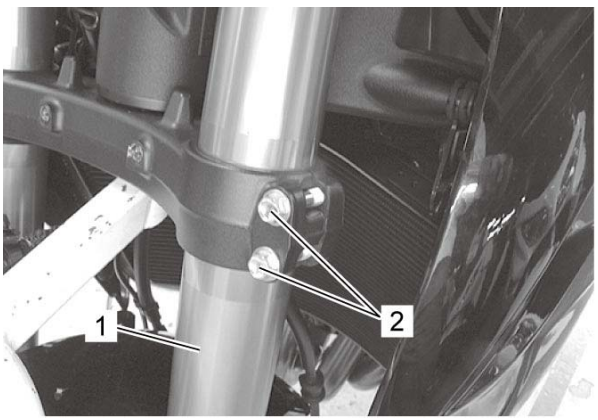

2) Tighten the front fork cap bolt (1) to the specified torque.

NOTE:
When the front fork was disassembled, tighten the front fork cap bolt firmly with specified torque.

Tightening torque
Front fork cap bolt (a): 23 N·m (2.3 kgf-m, 17.0 lbf-ft)

3) Loosen the front fork lower clamp bolts.

4) Set the top end of outer tube to the upper surface (2) of the steering stem upper bracket.

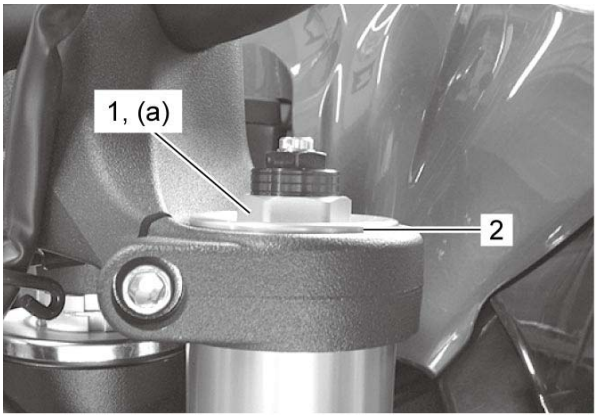

5) Tighten the front fork lower clamp bolts (1) to the specified torque.

Tightening torque
Front fork lower clamp bolt (a): 23 N·m (2.3 kgf-m, 17.0 lbf-ft)

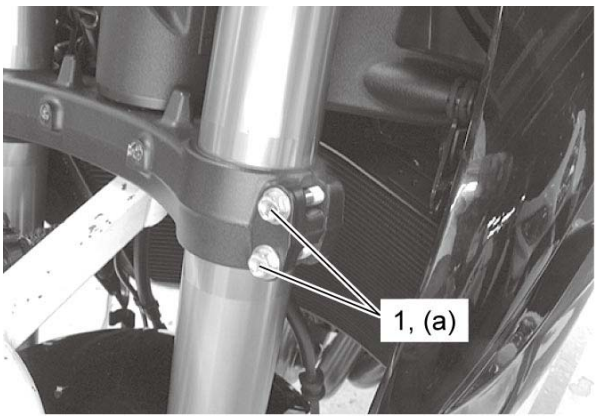

6) Tighten the front fork upper clamp bolt (1) to the specified torque.

Tightening torque
Front fork upper clamp bolt (a): 23 N·m (2.3 kgf-m, 17.0 lbf-ft)

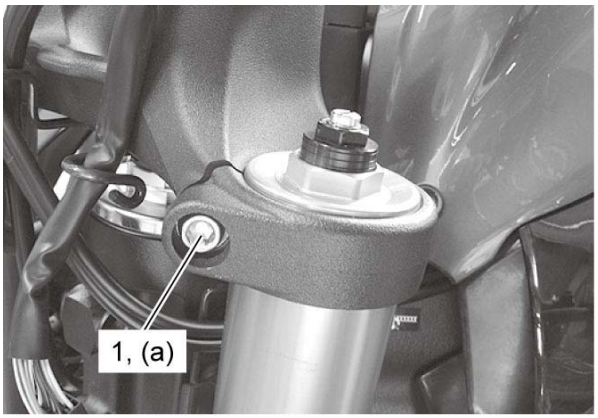

7) Install the front fender and tighten the front fender mounting bolts to the specified torque in order of “1” → “2” → “3”.

Tightening torque

Front fender mounting bolt (a): 12 N·m (1.2 kgf-m, 9.0 lbf-ft)

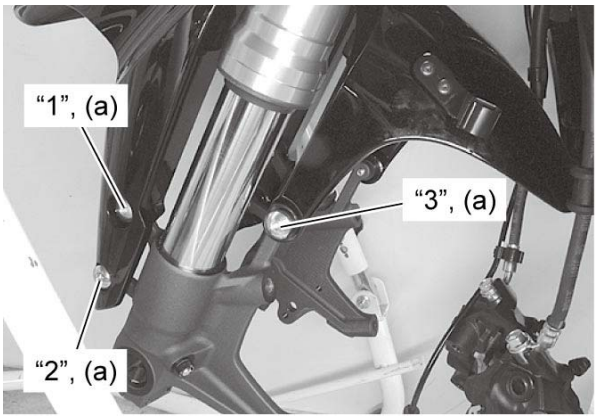

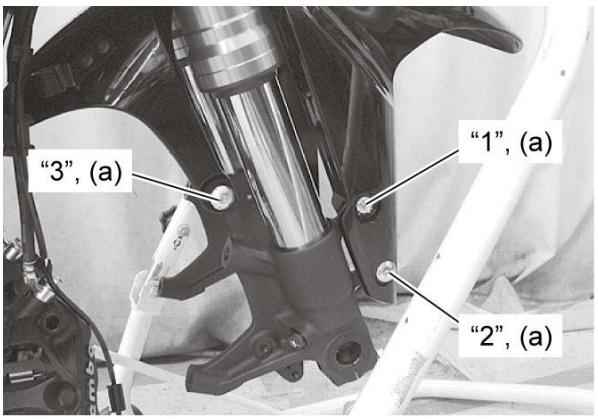

8) Install the removed parts.

Front Fork Disassembly and Reassembly

Refer to ***Front Fork Assembly Removal and Installation***.
Reference: Front Fork Components

NOTICE:
Do not disassemble the front fork cap bolt (1).



Disassembly

1) Remove the front axle pinch bolts (1).

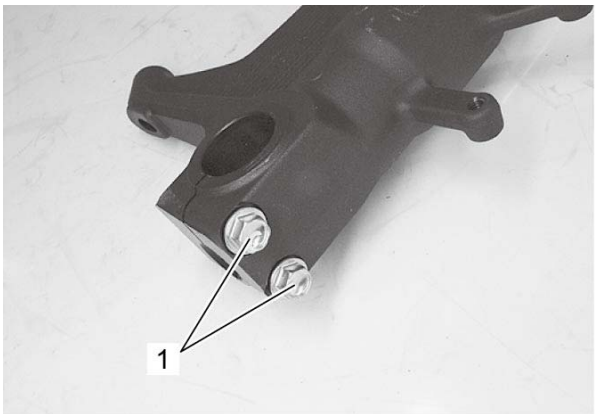

2) Loosen the front fork cap bolt (1).
3) Install the special tool to the holes (2) on the spacer.

Special Tool
(A): 09940–94930

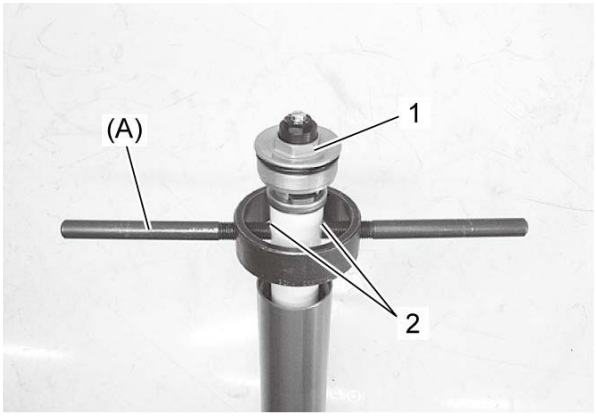

4) Set the special tool (A) referring to the manual.

5) Compress the fork spring using the special tool (A) and insert the special tool (B) between the lock-nut (1) and spring retainer (2). Then, expand the special tool (A) and pinch the special tool (B) between the lock-nut and the spring retainer.

NOTE:
If the lock-nut does not come out, pull up the front fork cap bolt by hand.

Special Tool

(A): 09940–93110
(B): 09940–94922
(C): 09940–94930

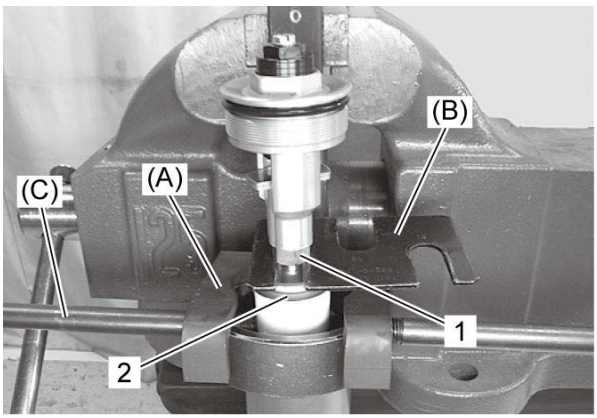

6) Remove the front fork cap bolt (1) from the inner rod by loosening the lock-nut (2).

7) Compress the special tool (A) and remove the special tool (B).

Special Tool

(A): 09940–93110
(B): 09940–94922
(C): 09940–94930

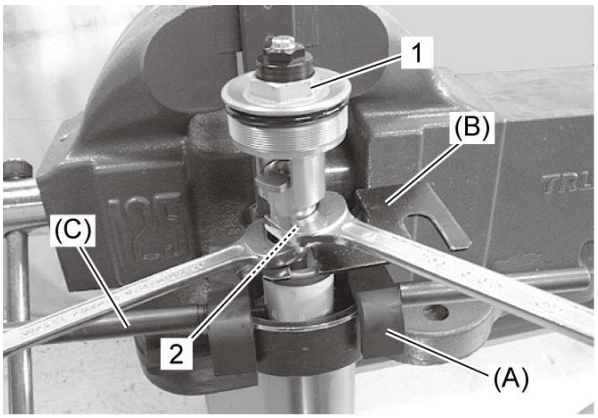

8) Expand slowly the special tool (A) and remove the special tool (A). Then, remove the spring retainer (1) and the spacer (2).

NOTE:
Hold front fork by hand to prevent it sliding.

Special Tool

(A): 09940–93110
(B): 09940–94930

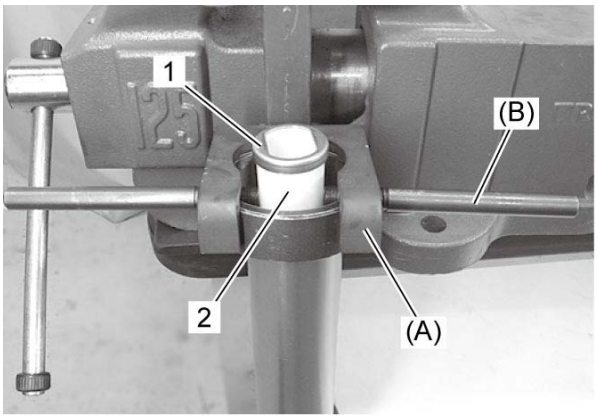

9) Pull up the inner rod using the special tool and remove the adjuster rod (1), lock-nut (2) and spring (3).

Special Tool

(A): 09940–52841

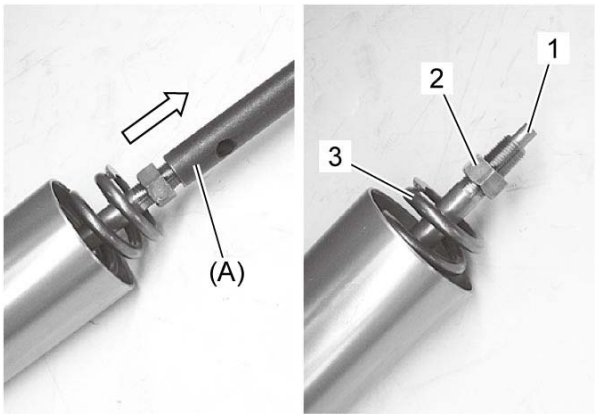

10) Invert the fork and stroke the inner rod several times to drain out fork oil.
11) Hold the fork inverted for a few minutes to drain oil.

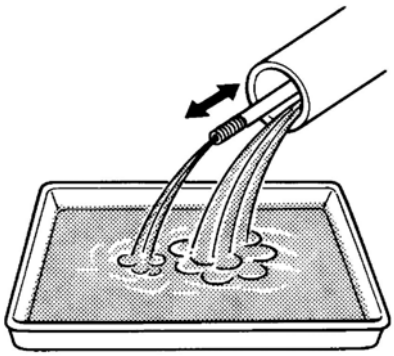

12) Remove the dust seal (1).
13) Remove the oil seal stopper ring (2).

NOTICE:
- **Scratches on the inner tube could cause oil leaks.**
- **Avoid scratching when removing.**

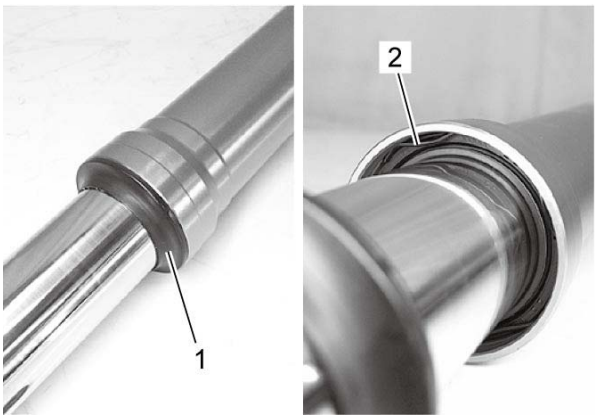

14) Remove the oil seal (1) by pulling out the inner tube (2).

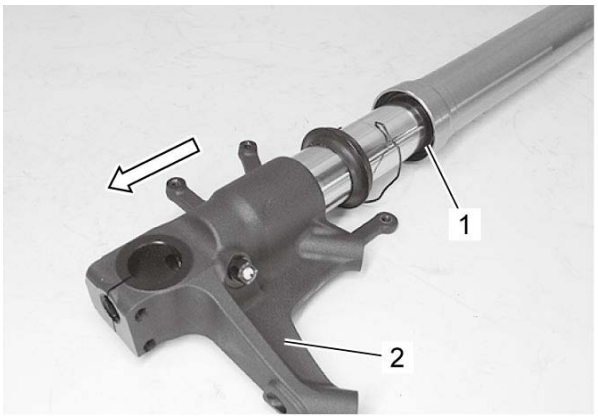

15) Remove the following parts from the inner tube.

a) Inner tube slide metal (1)
b) Outer tube slide metal (2)
c) Oil seal retainer (3)
d) Oil seal (4)
e) Oil seal stopper ring (5)
f) Dust seal (6)

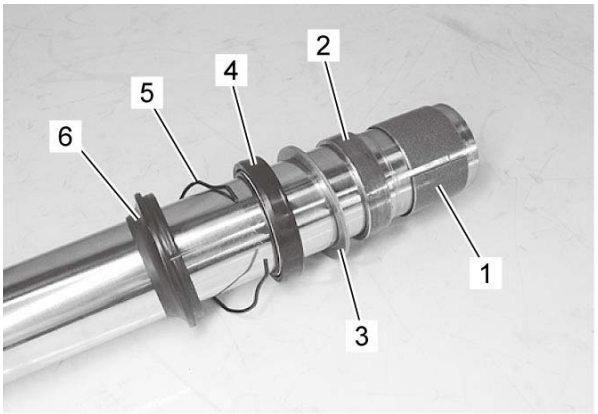

16) Remove the damper rod bolt (1) using the special tool.

Special Tool

(A): 09940–30221

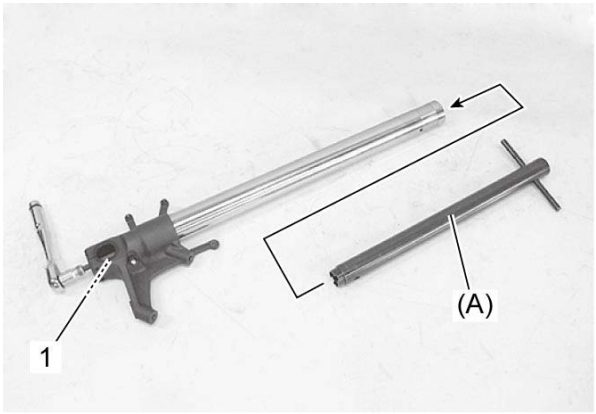

17) Remove the inner rod/damper rod (1).

NOTE:
Do not disassemble the inner rod / damper rod.

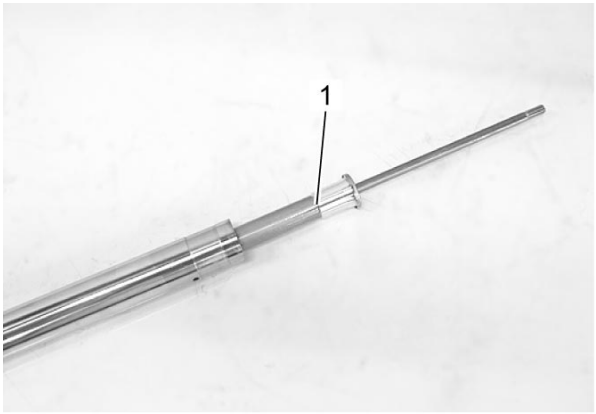

Reassembly

Reference: Front Fork Inspection

NOTICE:
- **Thoroughly wash all the component parts being assembled.**
  Insufficient washing can result in oil leakage or premature wear of the parts.
- **When reassembling the front fork, use new fork oil.**
- **Use the specified fork oil for the front fork.**

1) Cover the inner tube with a plastic film.

NOTICE:
Scratches on the oil seal lip may cause oil leakage. When installing the seals, place a plastic film over the slide bushing groove and edges of the inner tube to avoid damaging the seals' lip.

2) Install the following parts to the inner tube.
a) New dust seal (1)

b) Stopper ring (2)
c) New oil seal (3)

NOTE:
Face the stamp mark side of the oil seal to the dust seal side.

3) Apply fork oil to the dust seal lip and oil seal lip.
"A": Fork oil 99000–99044–L01 (SUZUKI FORK OIL L-01)

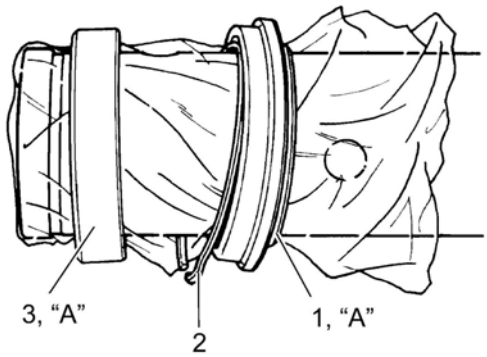

4) Remove the plastic film and install the oil seal retainer (1), new outer tube slide metal (2) and new inner tube slide metal (3) keep them free from dust.
5) Apply fork oil to the outer tube slide metal (2) and inner tube slide metal (3).
"A": Fork oil 99000–99044–L01 (SUZUKI FORK OIL L-01)

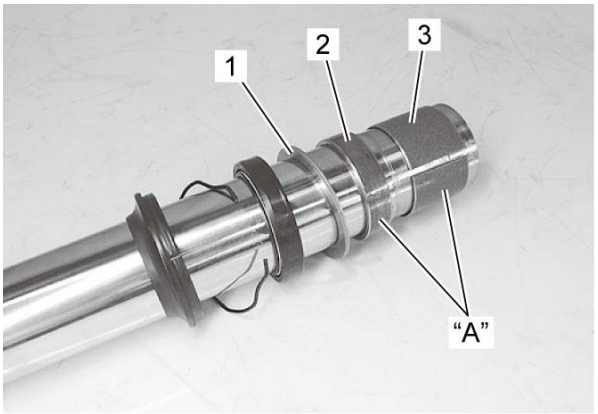

6) Insert the inner tube into the outer tube.
7) Press fit the oil seal (1) using the special tool until the stopper ring groove on the outer tube can be seen.

Special Tool
(A): 09940–52861

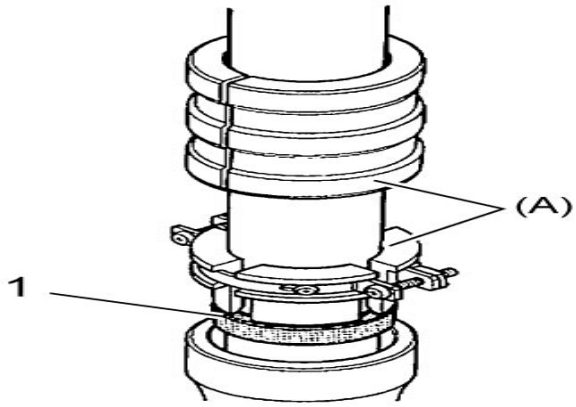

8) When installing the stopper ring (1), make sure that the stopper ring is fitted securely into the groove.

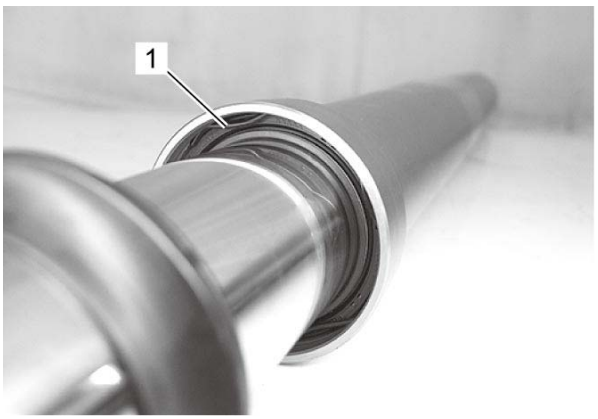

9) Press fit the dust seal (1).

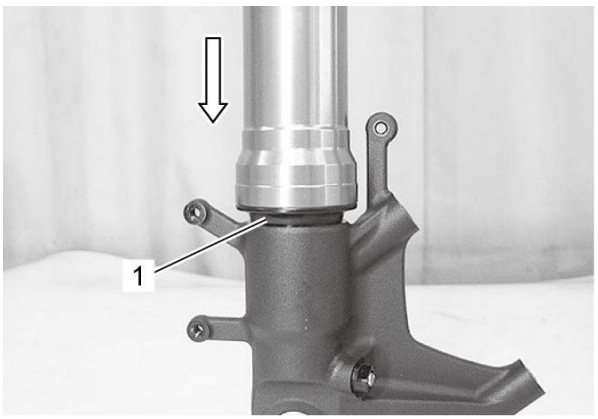

10) Install the inner rod/damper rod (1) and into the inner tube.

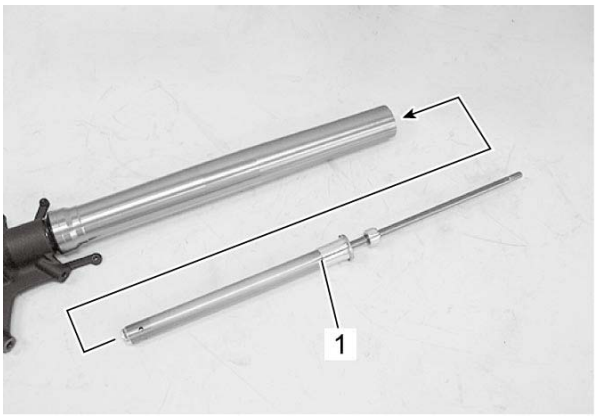

11) Install the new gasket (1) to the damper rod bolt (2).

12) Apply thread lock to the damper rod bolt and tighten it to the specified torque with the special tool.

"A": Thread lock cement 99000–32160 (THREAD LOCK CEMENT 1342H)

Special Tool

(A): 09940–30221

Tightening torque

Damper rod bolt (a): 23 N·m (2.3 kgf-m, 17.0 lbf-ft)

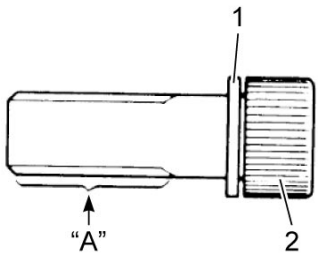

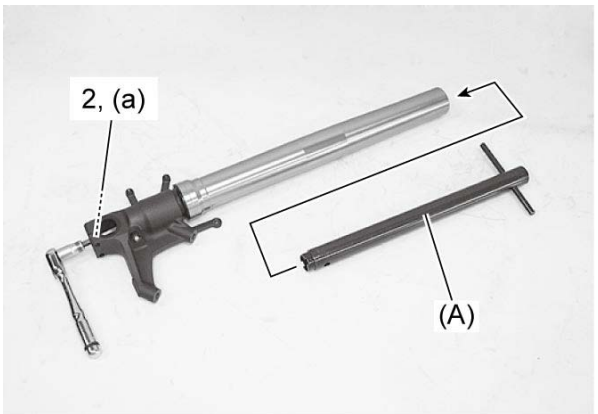

13) Place the front fork vertically without spring.

14) Compress it fully.

15) Pour specified front fork oil up to the top level of the inner tube.

"A": Fork oil 99000–99044–L01 (SUZUKI FORK OIL L-01)

Front fork oil capacity

Each leg
GSX-S1000/A [Standard]: 518 ml (17.52 US oz, 18.23 Imp oz)
GSX-S1000F/FA [Standard]: 523 ml (17.68 US oz, 18.41 Imp oz)

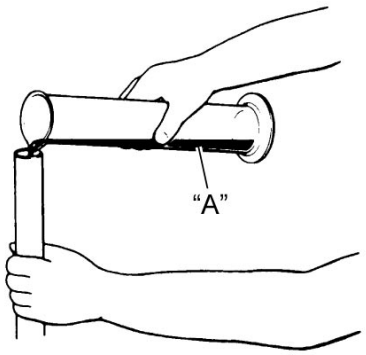

16) Move the inner rod slowly using the special tool (A) more than ten times until bubbles do not come out from the oil.

NOTE:
Refill front fork oil up to the top of the inner tube to find bubbles while bleeding air.

Special Tool

(A): 09940–52841

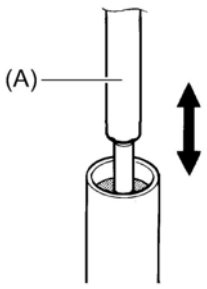

17) Refill specified front fork oil up to the top level of the inner tube again. Move the outer tube up and down several strokes until bubbles do not come out from the oil.

18) Keep the front fork vertically and wait 5 – 6 minutes.

NOTE:
- **Always keep oil level over the inner rod top end, or air may enter the inner rod during this procedure.**
- **Take extreme attention to pump out air completely.**

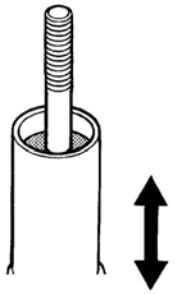

19) Hold the front fork vertically and adjust fork oil level “a” with the special tool.

NOTE:
When adjusting the fork oil level, remove the fork spring and compress the outer tube fully.

Front fork oil level

Without spring, outer tube fully compressed
GSX-S1000/A [Standard]: 95 mm (3.7 in)
GSX-S1000F/FA [Standard]: 91 mm (3.6 in)

Special Tool

(A): 09943–74111

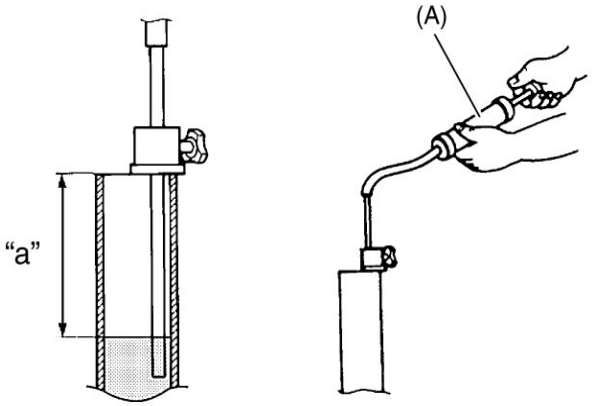

20) Install the fork spring into the inner tube with its smaller pitch “a” facing the upper side.

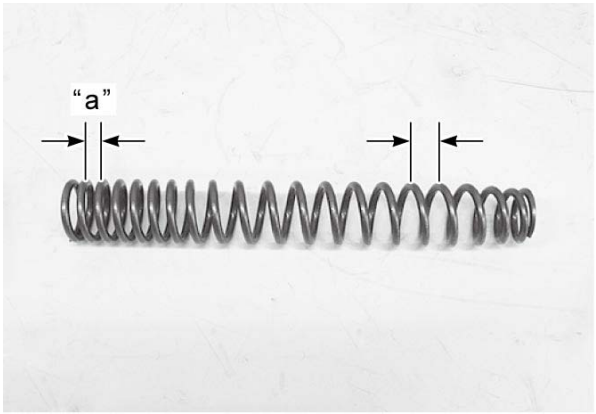

21) Pull up the inner rod using the special tool and install the adjuster rod (1).

Special Tool

(A): 09940–52841

22) Turn the lock-nut (2) until stops on the inner rod threads.

> **NOTE:**
> **Face the chamfer side of the lock-nut (2) downward.**

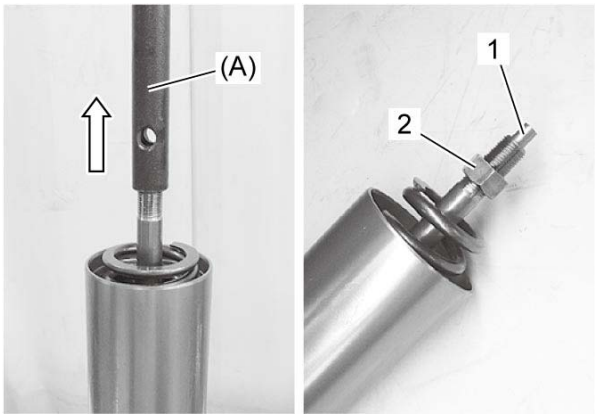

23) Install the spacer (1) and spring retainer (2).

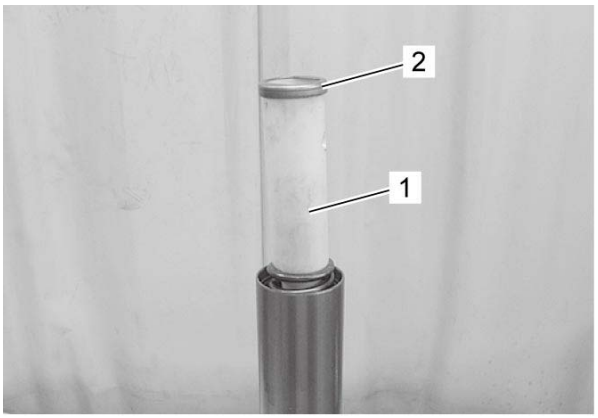

24) Install the special tool (A) to the holes (1) on the spacer.

25) Set the special tool (B) referring to the manual.

26) Pull up the inner rod using the special tool (C).

27) Compress the spring using the special tool (B) and then insert the special tool (D) between the lock-nut and spring retainer. Then, expand the special tool (B) and pinch the special tool (D) between the lock-nut and the spring retainer.

Special Tool

(A): 09940–94930
(B): 09940–93110
(C): 09940–52841
(D): 09940–94922

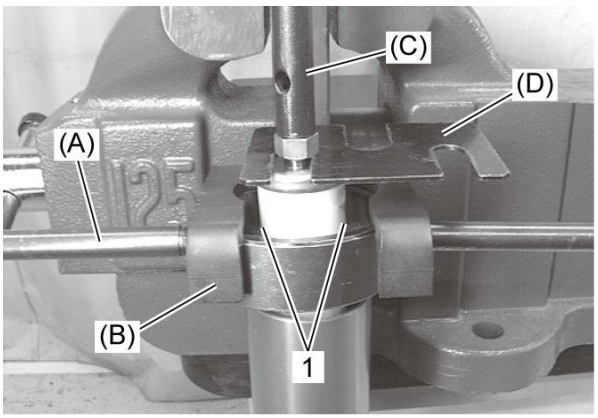

28) Turn the rebound damping force adjuster (1) clockwise until the first click is heard after distance "a" is obtained (stiffest position).

29) Apply fork oil to the new O-ring (2).

"A": Fork oil 99000–99044–L01 (SUZUKI FORK OIL L-01)

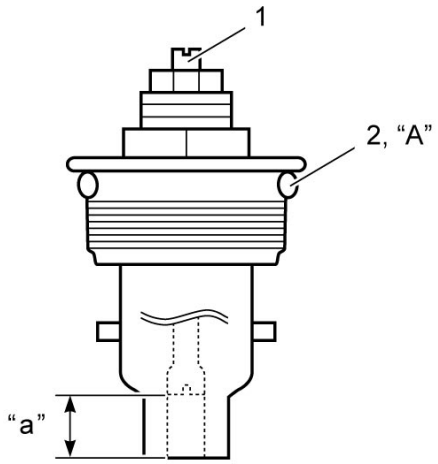

“a”:	13 mm (0.51 in)

30) Slowly turn the front fork cap bolt (1) completely by hand until the end of the front fork cap bolt (1) seats on the inner rod end.

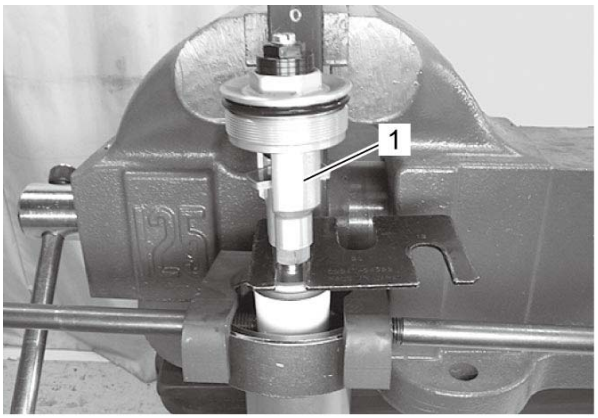

31) Hold the front fork cap bolt (1) and tighten the lock-nut (2) to the specified torque.

Tightening torque

Front fork inner rod lock-nut (a): 15 N·m (1.5 kgf-m, 11.0 lbf-ft)

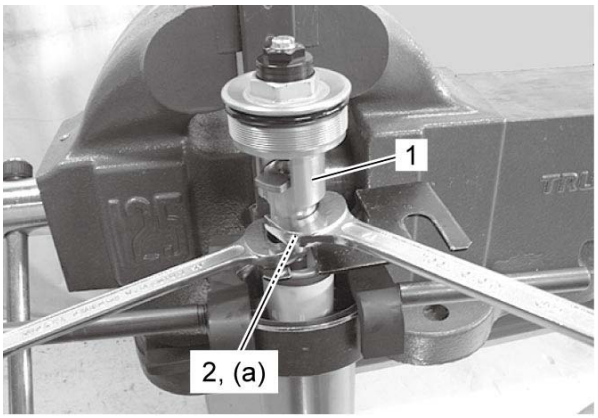

32) Remove the special tools.

> **NOTE:**
> **Hold front fork by hand to prevent it sliding.**

33) Tighten the front fork cap bolt to the outer tube temporarily.

34) Install the front axle pinch bolts.

35) After installing the front fork, adjust the spring and two kinds of damping force.

Front Fork Inspection

Refer to ***Front Fork Disassembly and Reassembly***.
Reference: Front Fork Components

Inner Tube / Outer Tube

Inspect the inner tube sliding surface and outer tube sliding surface for scuffing. If any defect is found, replace the part with a new one.



Fork Spring

Measure the fork spring free length “a”. If it is shorter than the service limit, replace it with a new one.

Front fork spring free length
[Limit]: 265 mm (10.5 in)

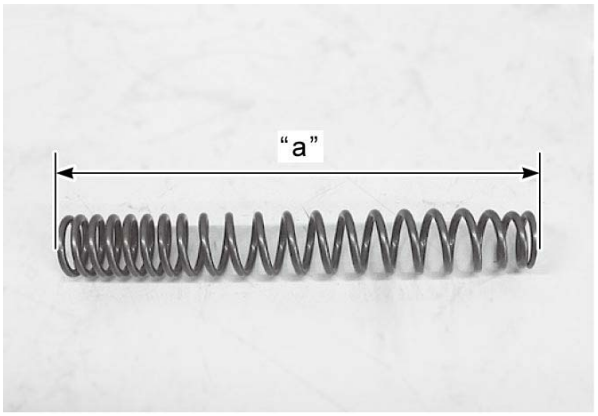

Inner Rod / Damper Rod

Move the inner rod by hand to examine it for smoothness.
If any defects are found, replace inner rod/damper rod with a new one.

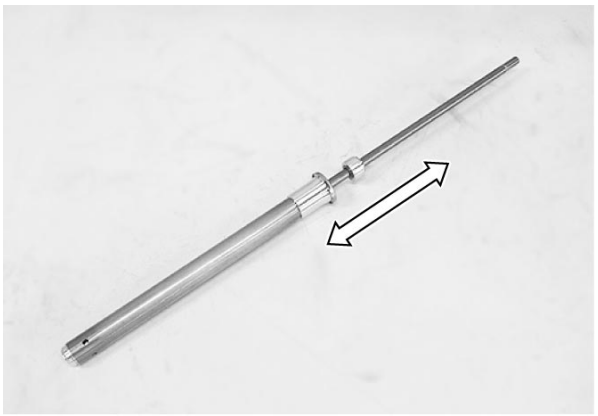

Front Fork On-Vehicle Inspection

Inspect the front forks (1) for oil leakage and damage.
If any defect is found, replace any defective parts.

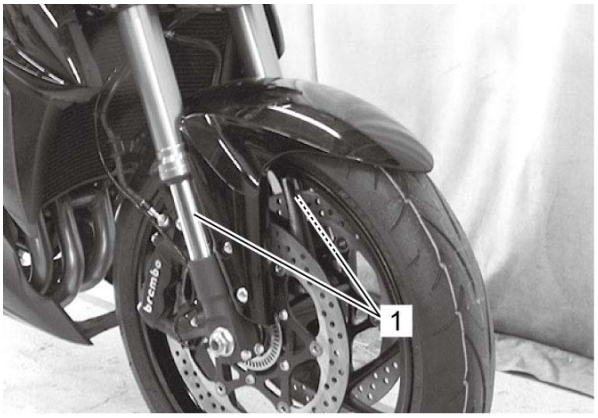

Front Suspension Adjustment

NOTICE:
Adjust the left and right front forks to the same setting.

Spring Adjustment

Turn the spring adjuster (1) counterclockwise fully. From that position (softest), turn it clockwise to the specified position “a”.

Front fork spring adjuster

[Standard]: 10 mm (0.39 in)

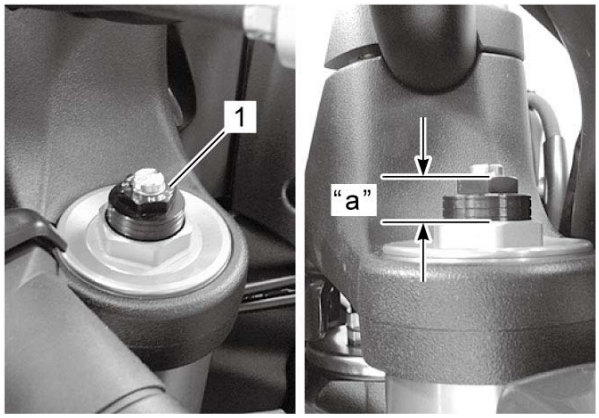

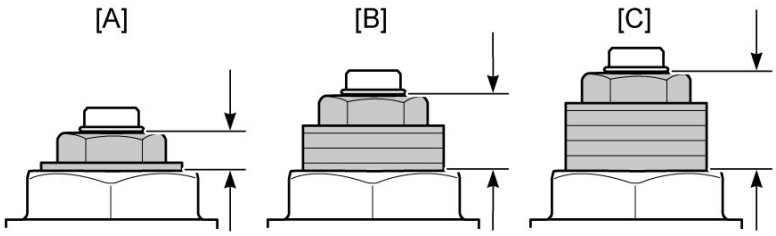

[A]:	4 mm (0.16 in) (maximum)	[C]:	14 mm (0.55 in) (minimum)
[B]:	10 mm (0.39 in) (standard)		

Damping Force Adjustment

Rebound damping force

Fully turn the damping force adjuster (1) clockwise. From that position (stiffest), turn it counterclockwise to standard setting position.

Front fork damping force adjuster

Rebound side
[Standard]: 8 clicks counterclockwise from stiffest position

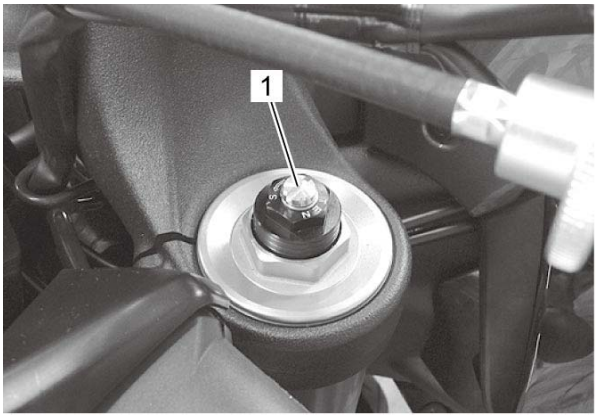

Compression damping force

Fully turn the damping force adjuster (1) clockwise. From that position (stiffest), turn it counterclockwise to the standard setting position.

Front fork damping force adjuster

Compression side
[Standard]: 8 clicks counterclockwise from stiffest position

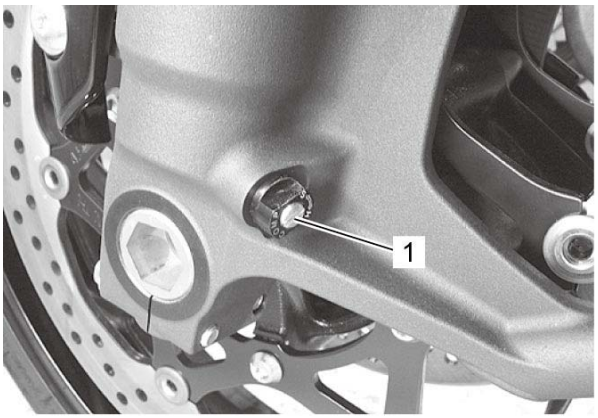

Tightening Torque Specifications

Fastening part	Tightening torque			Note
	N·m	kgf-m	lbf-ft	
Front fork cap bolt	23	2.3	17.0	☞
Front fork lower clamp bolt	23	2.3	17.0	☞
Front fork upper clamp bolt	23	2.3	17.0	☞
Front fender mounting bolt	12	1.2	9.0	☞
Damper rod bolt	23	2.3	17.0	☞
Front fork inner rod lock-nut	15	1.5	11.0	☞

Reference:
For the tightening torques of fasteners not specified in this page, refer to:
Front Fork Components
Fasteners Information

Recommended Service Material

Material	SUZUKI recommended product or Specification		Note
Fork oil	SUZUKI FORK OIL L-01	P/No.: 99000–99044–L01	☞ ☞ ☞ ☞
Thread lock cement	THREAD LOCK CEMENT 1342H	P/No.: 99000–32160	☞

NOTE:
Required service material(s) is also described in:
Front Fork Components

Special Tool

09940–30221 Front fork cylinder holder ☞ ☞	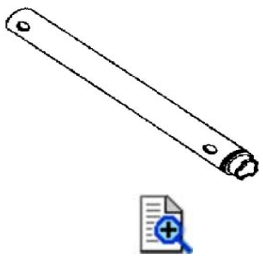	09940–52841 Front fork inner rod holder ☞ ☞ ☞ ☞	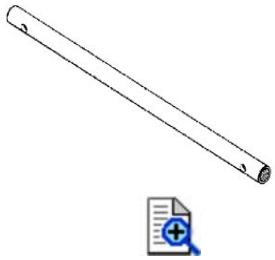
09940–52861 Front fork oil seal installer set 1. Hammer (09941-53610) 2. Attachment (09940-52870) 3. Attachment (09940-52880)☞	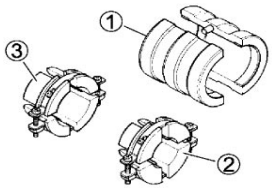	09940–93110 Fork spring compressor ☞ ☞ ☞ ☞	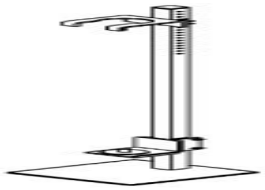
09940–94922 Front fork spring stopper plate This tool is included in Front fork spacer holder set (09940-94922).☞ ☞ ☞		09940–94930 Front fork spacer holder ☞ ☞ ☞ ☞ ☞	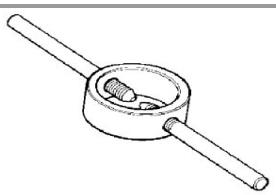
09943–74111 Front fork oil level gauge ☞	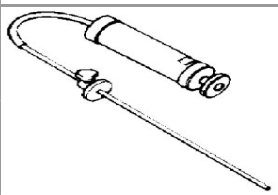		

Suspension and Wheel Symptom Diagnosis

Condition	Possible Cause	Action
Wobbly front wheel	Distorted wheel rim.	*Replace.* ☞
	Worn front wheel bearings.	*Replace.* ☞
	Defective or incorrect tire.	*Replace.* ☞
	Loose front axle nut.	*Tighten.* ☞
	Loose front axle pinch bolts.	*Tighten.* ☞
	Incorrect fork oil level.	*Adjust.* ☞
	Incorrect front wheel weight balance.	*Adjust.* ☞
Front suspension too soft	Insufficiently viscous fork oil.	*Replace.* ☞
	Insufficient fork oil.	*Check level and add.* ☞
	Weak spring.	*Replace.* ☞
	Improperly set front fork spring adjuster.	*Adjust.* ☞
	Improperly set front fork damping force adjuster.	*Adjust.* ☞
Front suspension too stiff	Excessively viscous fork oil.	*Replace.* ☞
	Excessive fork oil.	*Check level and drain.* ☞
	Bent front axle.	*Replace.* ☞
	Improperly set front fork spring adjuster.	*Adjust.* ☞
	Improperly set front fork damping force adjuster.	*Adjust.* ☞
Front suspension too noisy	Insufficient fork oil.	*Check level and add.* ☞
	Loose front fork clamp bolt.	*Tighten.* ☞
Wobbly rear wheel	Distorted wheel rim.	*Replace.* ☞
	Worn rear wheel bearings.	*Replace.* ☞
	Defective or incorrect tire.	*Replace.* ☞
	Worn swingarm bearings.	*Replace.* ☞
	Loose rear suspension related bolt and nut.	*Tighten.* ☞
	Loose rear axle nut.	*Tighten.* ☞
	Worn rear suspension bearings.	*Replace.* ☞
	Incorrect rear wheel weight balance.	*Adjust.* ☞
Rear suspension too soft	Weak rear shock absorber spring.	*Replace.* ☞
	Rear shock absorber leaks oil.	*Replace.* ☞

	Improperly set rear shock absorber spring adjuster.	*Adjust.* ☞
	Improperly set rear shock absorber damping force adjuster.	*Adjust.* ☞
Rear suspension too stiff	Bent rear shock absorber shaft.	*Replace.* ☞
	Worn swingarm bearings.	*Replace.* ☞
	Worn rear suspension bearings.	*Replace.* ☞
	Bent swingarm pivot shaft.	*Replace.* ☞
	Improperly set rear shock absorber spring adjuster.	*Adjust.* ☞
	Improperly set rear shock absorber damping force adjuster.	*Adjust.* ☞
Rear suspension too noisy	Loose rear suspension related bolt and nut.	*Tighten.* ☞
	Worn swingarm bearings.	*Replace.* ☞
	Worn rear suspension bearings.	*Replace.* ☞

Rear Suspension Components

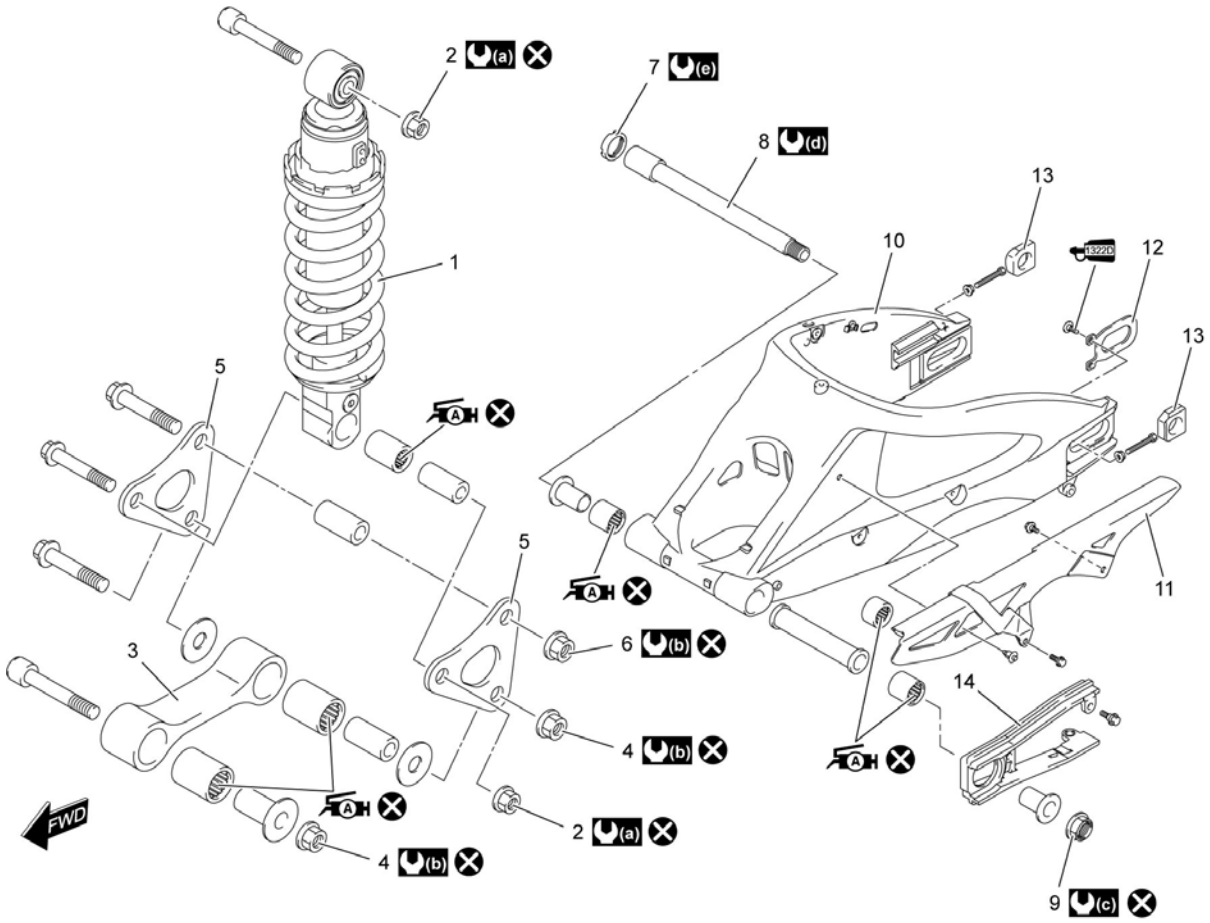

1.	Rear shock absorber	9.	Swingarm pivot nut	(c):	100 N·m (10.2 kgf-m, 74.0 lbf-ft)
2.	Rear shock absorber mounting nut	10.	Swingarm	(d):	15 N·m (1.5 kgf-m, 11.0 lbf-ft)
3.	Cushion rod	11.	Chain case	(e):	90 N·m (9.2 kgf-m, 66.5 lbf-ft)
4.	Cushion rod mounting nut	12.	Plate	A:	Apply grease to the bearing.
5.	Cushion lever	13.	Chain adjuster	1322D:	Apply thread lock to the thread part.
6.	Cushion lever mounting nut	14.	Chain buffer	:	Do not reuse.
7.	Swingarm pivot lock-nut	(a):	50 N·m (5.1 kgf-m, 37.0 lbf-ft)		
8.	Swingarm pivot shaft	(b):	80 N·m (8.2 kgf-m, 59.0 lbf-ft)		

Cushion Lever Inspection

Refer to ***Cushion Lever Removal and Installation***.

Cushion Lever

Inspect the cushion levers for damage and bend. If any defects are found, replace the cushion levers with new ones.



Cushion Lever Removal and Installation

Reference: Rear Suspension Components
Reference: Rear Suspension Assembly Construction

Removal

1) Remove the exhaust pipe and muffler. ☞ and ☞
2) Support the motorcycle with a jack to relieve load on the cushion levers.
3) Remove the cushion levers (1) and washers.

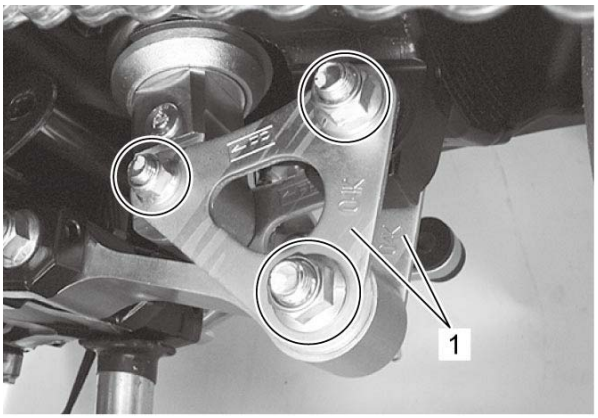

Installation

Reference: Cushion Lever Inspection

Install the cushion lever in the reverse order of removal. Pay attention to the following points:
- Install the washers (1) between the cushion rod and cushion levers.
- Set the cushion levers (2) so that the arrow mark (3) points forward.
- Tighten each new nuts to the specified torque.

Tightening torque

Cushion lever mounting nut (a): 80 N·m (8.2 kgf-m, 59.0 lbf-ft)
Cushion rod mounting nut (b): 80 N·m (8.2 kgf-m, 59.0 lbf-ft)
Rear shock absorber lower mounting nut (c): 50 N·m (5.1 kgf-m, 37.0 lbf-ft)

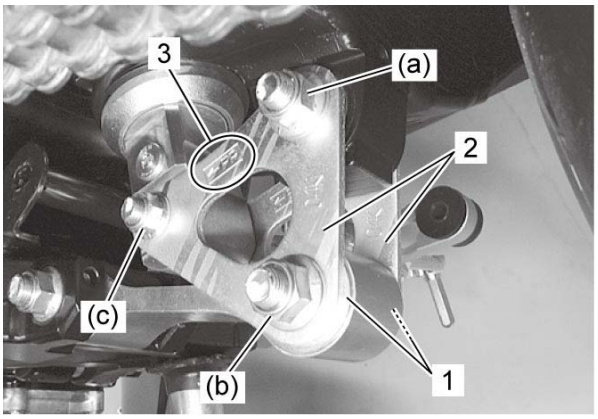

- Install the exhaust pipe and muffler. ☞

Cushion Rod Bearing Removal and Installation

Refer to ***Cushion Rod Removal and Installation***.
Reference: Rear Suspension Components
Reference: Rear Suspension Assembly Construction

Removal

1) Remove the cushion rod bearings (1) with the special tool.

Special Tool
(A): 09921–20240

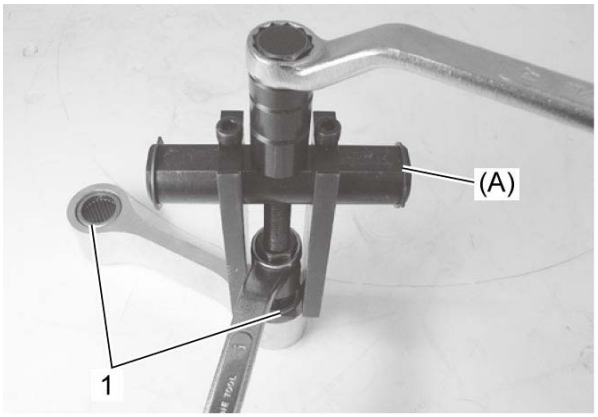

Installation

1) Apply a small quantity of the grease to housing.

"A": Grease 99000–25011 (SUZUKI SUPER GREASE A)

2) Press the new bearings into the cushion rod to the depth "a" of 0.5 mm (0.02 in) from the edge with the special tool and suitable size socket wrench.

Special Tool
(A): 09924–84521

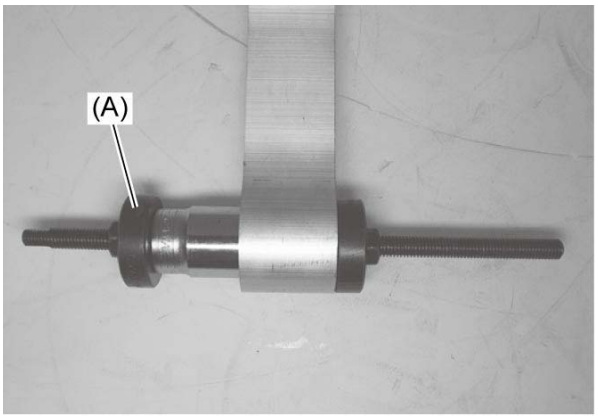

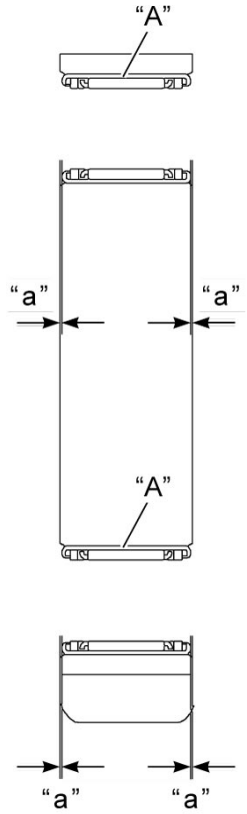

3) Apply grease to the bearings and dust seals.

“A”: Grease 99000–25011 (SUZUKI SUPER GREASE A)

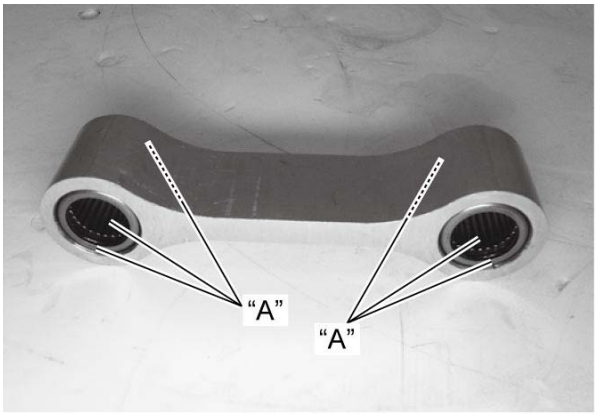

Cushion Rod Inspection

Refer to ***Cushion Rod Removal and Installation***.

Spacer

Inspect the spacers for any flaws or other damage. If any defects are found, replace it with a new one.



Cushion Rod Bearing

1) Insert the spacers into bearings.

2) Check the play by moving the spacers up and down. If excessive play is noted, replace the bearing with a new one. ☞

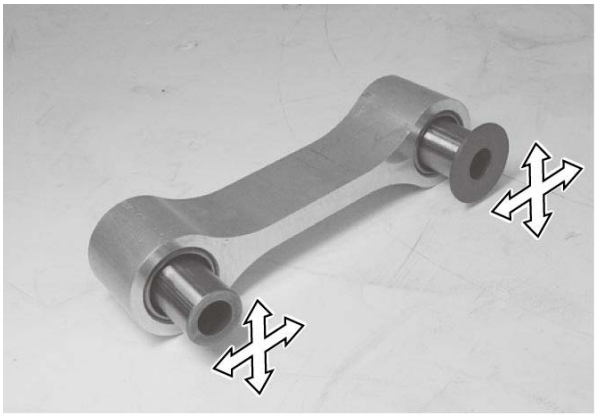

Cushion Rod

Inspect the cushion rod for damage. If any defect is found, replace the cushion rod with a new one.



Cushion Rod Removal and Installation

Reference: Rear Suspension Components
Reference: Rear Suspension Assembly Construction

Removal

1) Remove the exhaust pipe and muffler. ☞ and ☞
2) Support the motorcycle with a jack to relieve load on the cushion rod.
3) Remove the cushion rod (1) and washers.

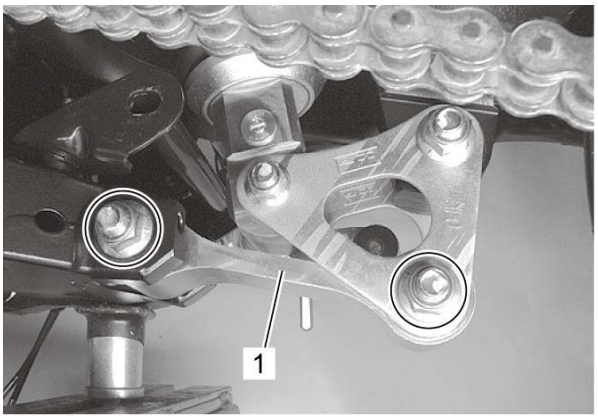

4) Remove the spacers (1).

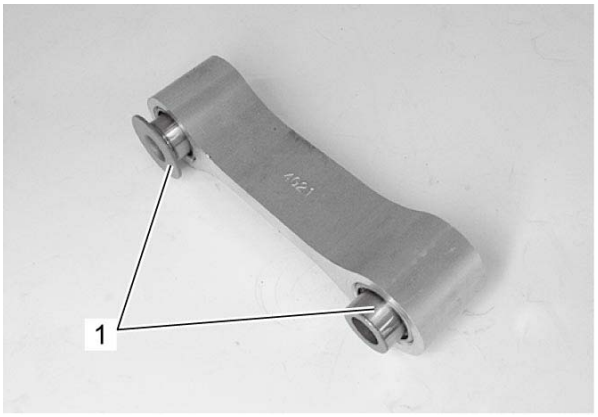

Installation

Reference: Cushion Rod Inspection
Install the cushion rod in the reverse order of removal. Pay attention to the following points:
- Insert the spacer (1) into the bearing from the left side.

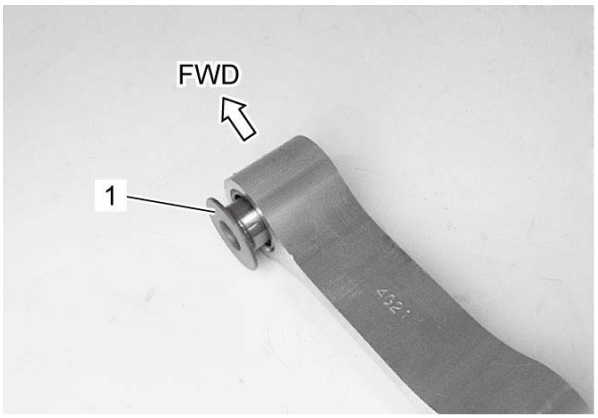

- Install the washers (1) between cushion rod and cushion levers.
- Tighten the new nuts (2) to the specified torque.

Tightening torque

Cushion rod mounting nut (a): 80 N·m (8.2 kgf-m, 59.0 lbf-ft)

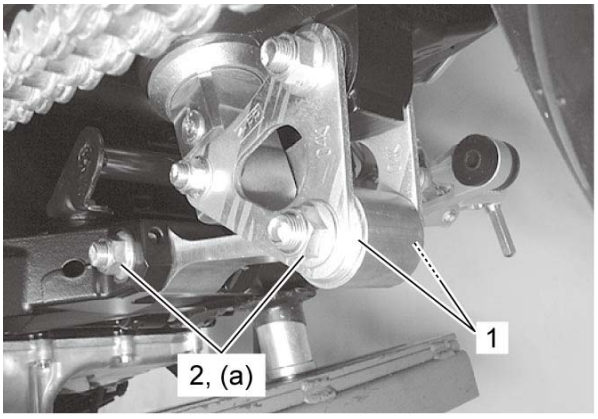

- Install the exhaust pipe and muffler. ☞

Rear Shock Absorber Adjustment

Spring Adjustment

Turn the spring tension ring (1) to the desired position.

NOTE:
Position 1 provides the softest spring tension and position 7 provides the stiffest.

Rear shock absorber spring adjuster

GSX-S1000/A [Standard]: 4th position
GSX-S1000F/FA [Standard]: 3rd position

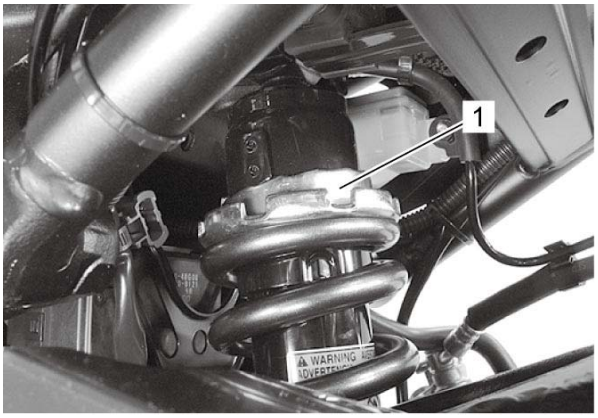

Damping Force Adjustment

NOTE:
- **Turn the adjuster clockwise to stiffen the damping force and turn it counterclockwise to soften the damping force.**
- **Fine-tune the adjusters by turning it slightly until punch marks align.**

Fully turn the damping force adjuster (1) clockwise. From full hard position, turn it out to standard setting position.

Rear shock absorber damping force adjuster

Rebound side
[Standard]: 1 turn counterclockwise from stiffest position

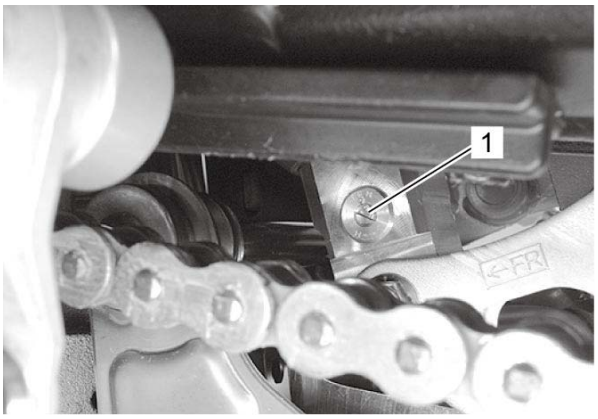
1
←FR

Rear Shock Absorber Bearing Removal and Installation

Refer to ***Rear Shock Absorber Removal and Installation***.

Removal

1) Remove the rear shock absorber bearing (1) with the special tool.

Special Tool

(A): 09943–88211

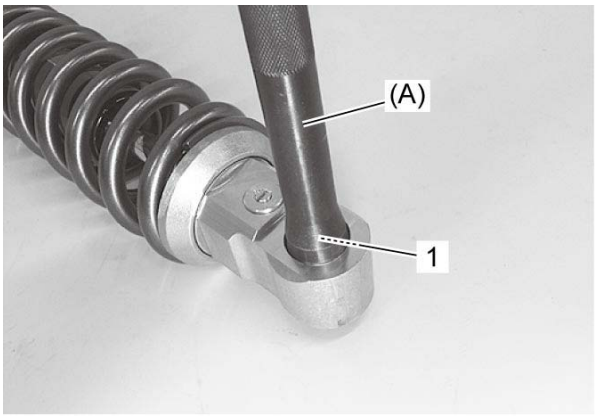

Installation

1) Apply a small quantity of the grease to housing when installing the bearing.

"A": Grease 99000–25011 (SUZUKI SUPER GREASE A)

2) Press the new bearing into the rear shock absorber to the depth "a" of 0.5 mm (0.02 in) from the edge with the special tool and suitable size socket wrench.

Special Tool

(A): 09924–84521

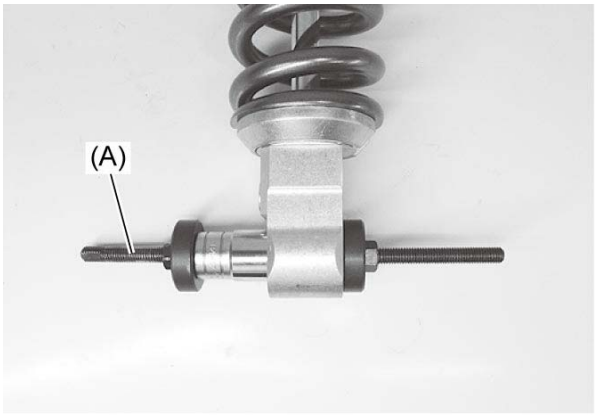

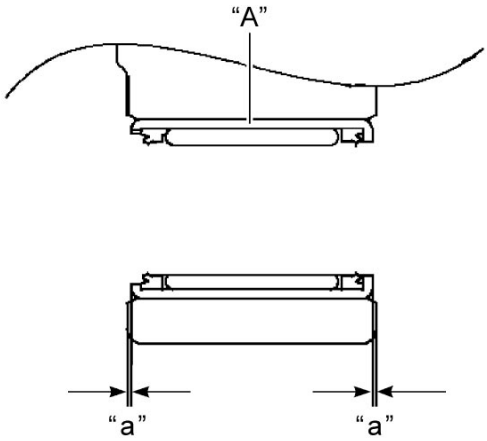

3) Apply grease to the bearing and dust seals.

“A”: Grease 99000–25011 (SUZUKI SUPER GREASE A)



Rear Shock Absorber Disposal

Refer to ***Rear Shock Absorber Removal and Installation***.
The rear shock absorber unit contains high-pressure nitrogen gas.

⚠WARNING:
- **Mishandling the rear shock absorber can cause explosion.**
- **Keep away from fire and heat. High gas pressure caused by heat can cause an explosion.**
- **Never apply heat or disassemble the damper unit since it can explode or oil can splash hazardously.**
- **Release gas pressure before disposing.**

Gas Pressure Release

1) Mark the drill center at the location “a” using a center punch.

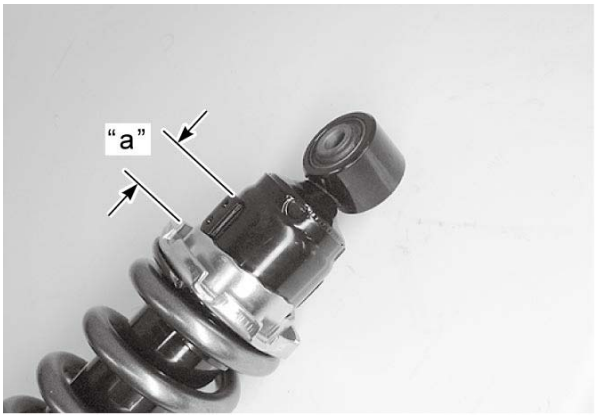

2) Wrap rear shock absorber (1) with a plastic bag (2) and fix it on a vise.

3) Drill a 2 – 3 mm (0.08 – 0.12 in) hole at the marked drill center using a drilling machine and let out gas while taking care not to get the plastic bag entangled with the drill bit.

⚠WARNING:
- **Be sure to wear protective glasses since drilling chips and oil may fly off with blowing gas when the drill bit has penetrated through the body.**
- **Make sure to drill at the specified position. Otherwise, pressurized oil many spout out forcefully.**

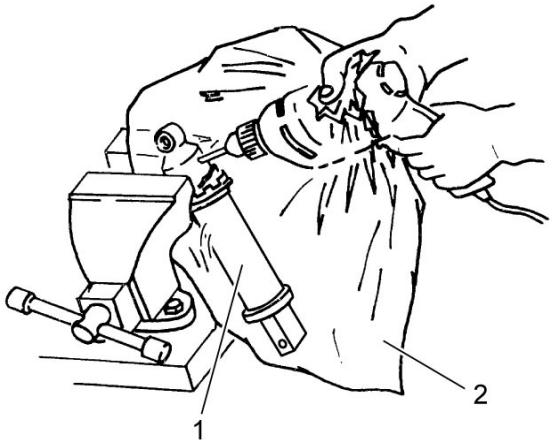
1
2

Rear Shock Absorber Inspection

Refer to ***Rear Shock Absorber Removal and Installation***.

Rear Shock Absorber

Inspect the rear shock absorber for damage and oil leakage, and absorber bushing for wear and damage. If any defect is found, replace the rear shock absorber with a new one.

NOTICE:
Do not attempt to disassemble the rear shock absorber. It is unserviceable.



Spacer

Inspect the spacer for any flaws or other damage. If any defect is found, replace the spacer with a new one.



Rear Shock Absorber Bearing

1) Insert the spacer into bearing.

2) Check the play by moving the spacer up and down. If excessive play is noted, replace the bearing with a new one. ☞

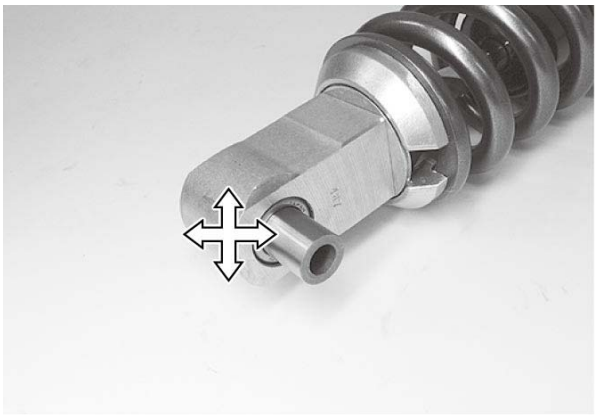

Rear Shock Absorber Removal and Installation

Reference: Rear Suspension Components
Reference: Rear Suspension Assembly Construction

Removal

1) Remove the exhaust pipe and muffler. ☞

2) Support the motorcycle with a jack to relieve load on the rear shock absorber.

3) Remove the rear brake reservoir tank mounting bolt (1).

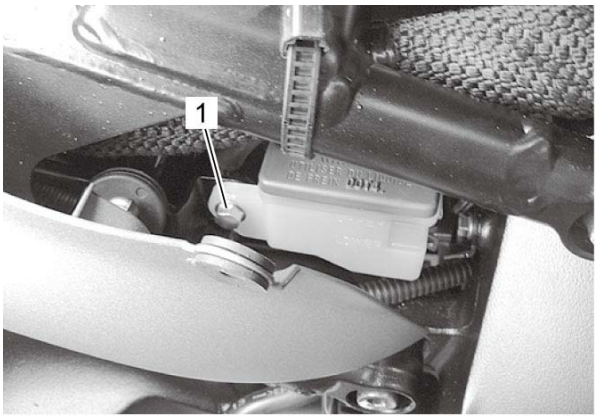

4) Remove the cushion rod (rear) mounting bolt and nut (1) and washers.

5) Remove the rear shock absorber lower mounting bolt and nut (2).

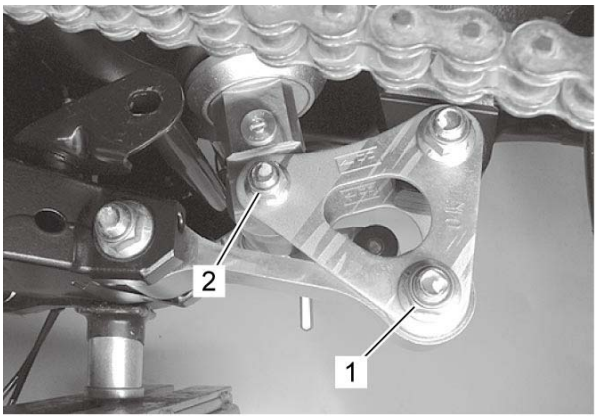

6) Remove the rear shock absorber upper mounting bolt and nut (1).

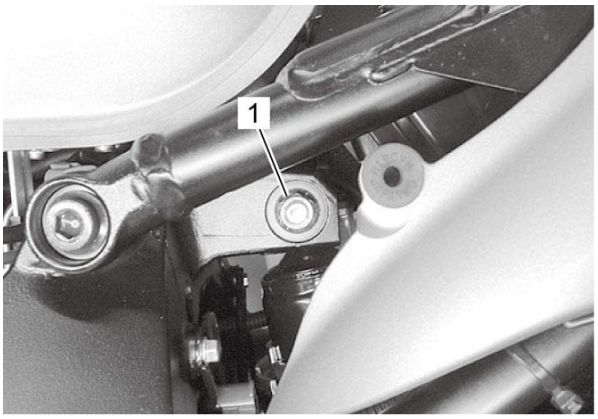

7) Remove the rear shock absorber (1) to the lower side.

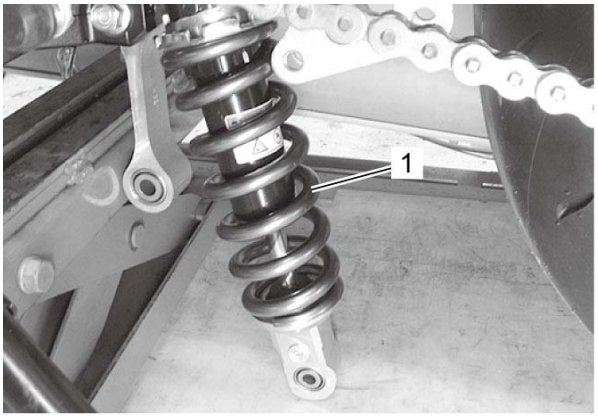

8) Remove the spacer (1) from the rear shock absorber.

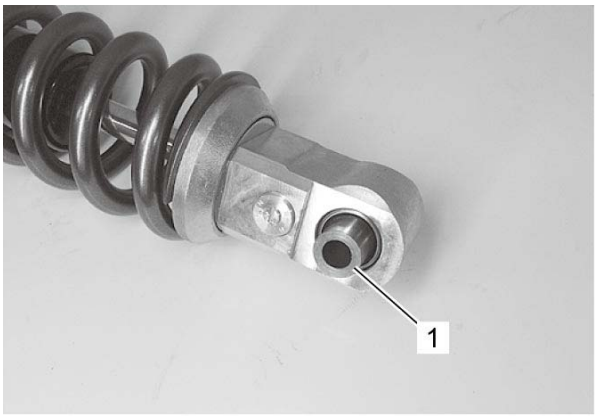

Installation

Reference: Rear Shock Absorber Inspection

Install the rear shock absorber in the reverse order of removal. Pay attention to the following points:

- Install the rear shock absorber (1) so that the warning label (2) become the rear side.

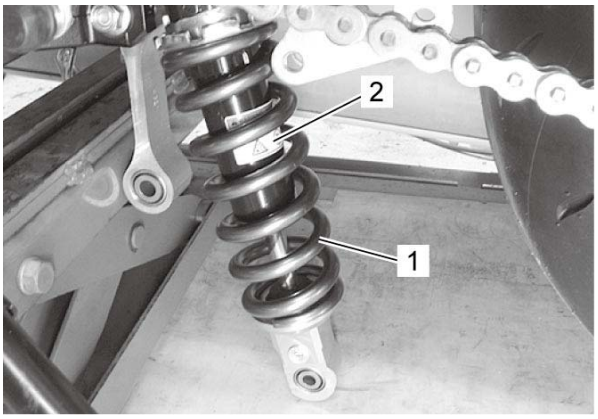

- Install the washers (1) between the cushion rod and cushion levers.
- Tighten the new rear shock absorber mounting nuts (2) to the specified torque.
- Tighten the new cushion rod (rear) mounting nut (3) to the specified torque.

Tightening torque

Rear shock absorber mounting nut (a): 50 N·m (5.1 kgf-m, 37.0 lbf-ft)
Cushion rod (rear) mounting nut (b): 80 N·m (8.2 kgf-m, 59.0 lbf-ft)

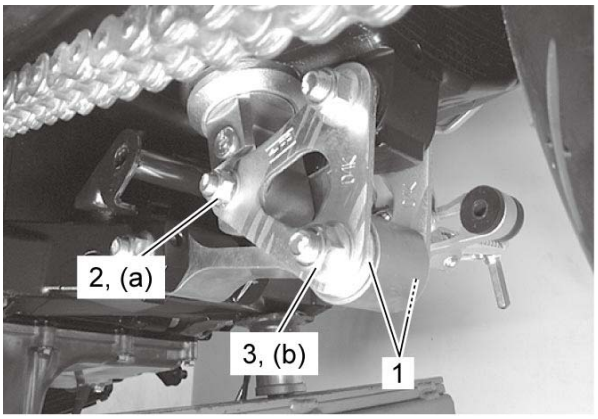

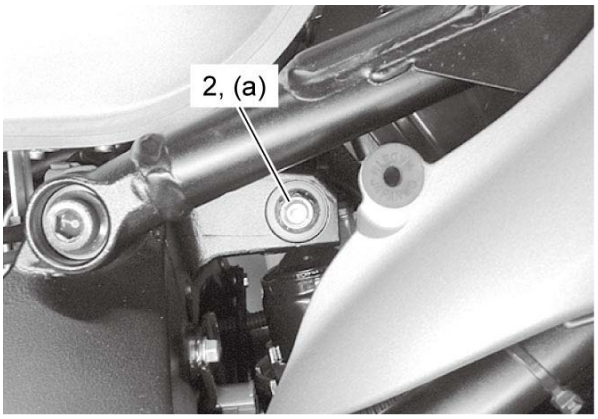

- After the stopper (1) of rear brake reservoir tank has contacted the bracket of seat rail, tighten the bolt (2).

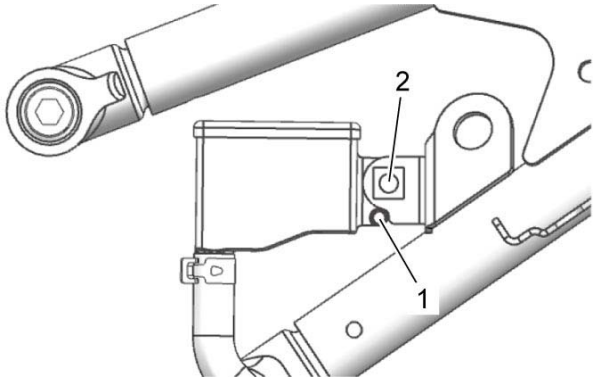

- Install the exhaust pipe and muffler. ☞

Rear Suspension Assembly Construction

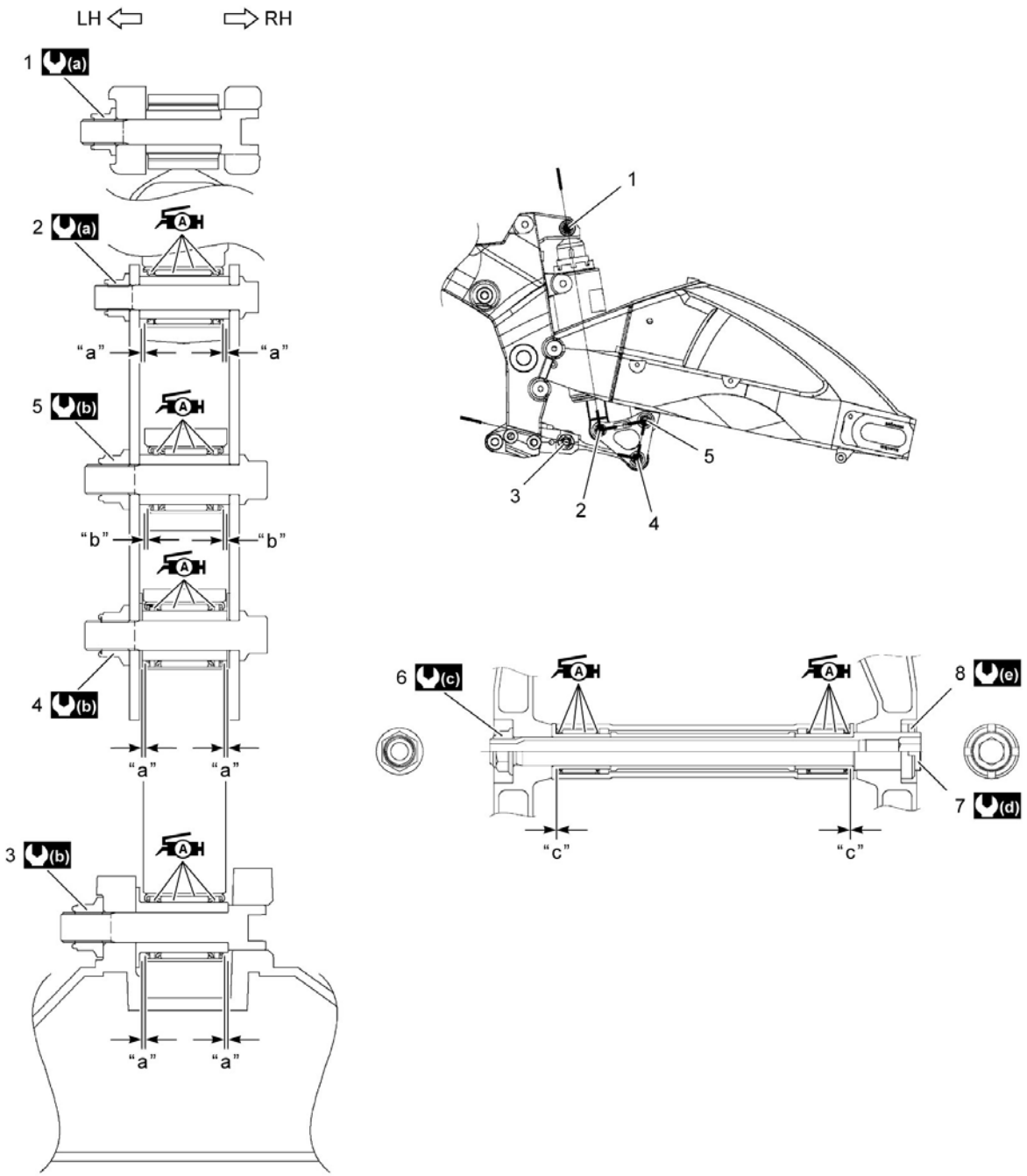

1.	Rear shock absorber upper mounting nut	7.	Swingarm pivot shaft	(b):	80 N·m (8.2 kgf-m, 59.0 lbf-ft)
2.	Rear shock absorber lower mounting nut	8.	Swingarm pivot lock-nut	(c):	100 N·m (10.2 kgf-m, 74.0 lbf-ft)

3.	Cushion rod (front) mounting nut	“a”:	0.5 mm (0.02 in)	(d):	15 N·m (1.5 kgf-m, 11.0 lbf-ft)
4.	Cushion rod (rear) mounting nut	“b”:	1.5 mm (0.059 in)	(e):	90 N·m (9.2 kgf-m, 66.5 lbf-ft)
5.	Cushion lever mounting nut	“c”:	0 – 0.5 mm (0 – 0.019 in)	(A):	Apply grease.
6.	Swingarm pivot nut	(a):	50 N·m (5.1 kgf-m, 37.0 lbf-ft)		

Rear Suspension On-Vehicle Inspection

Inspect the rear shock absorber (1) for oil leakage and check that there is no play in the swingarm (2). Replace any defective parts, if necessary.

- Rear shock absorber replace: ☞
- Swingarm pivot shaft and bearing inspection: ☞
- Cushion lever inspection: ☞
- Cushion rod inspection: ☞
- Swingarm inspection: ☞

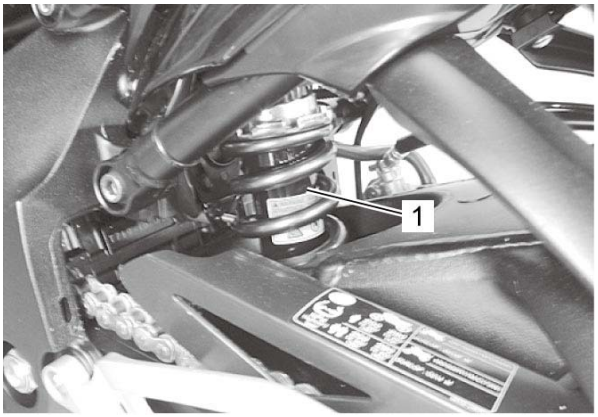

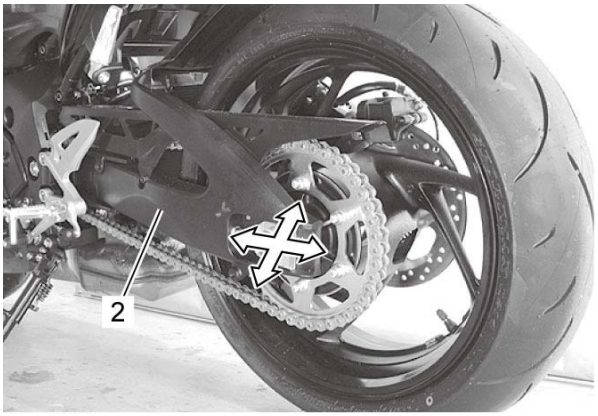

Swingarm Bearing Removal and Installation

Reference: Rear Suspension Components
Reference: Rear Suspension Assembly Construction
Refer to ***Swingarm Removal and Installation***.

Removal

1) Remove the swingarm pivot bearings (1) on both sides using the special tool.

Special Tool
(A): 09921–20240

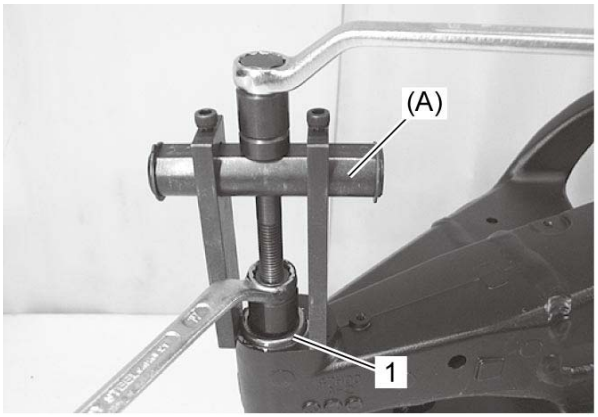

2) Remove the center spacer (1).

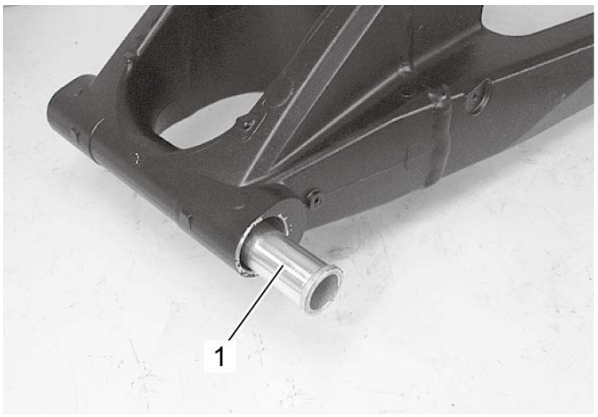

3) Remove the cushion lever bearing (1) using the special tool.

Special Tool
(A): 09921–20240

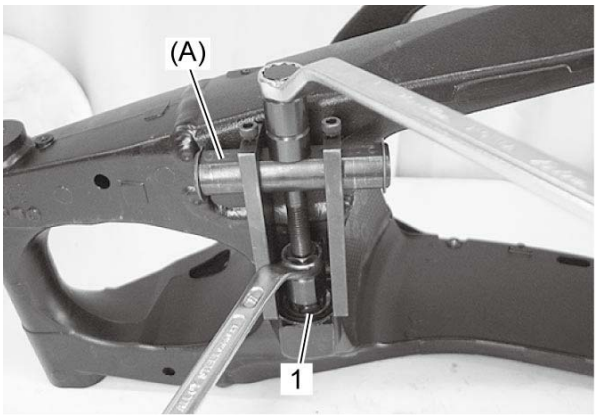

Installation

1) Apply a small quantity of the grease to housing when installing the bearing.

"A": Grease 99000–25011 (SUZUKI SUPER GREASE A)

2) Press the new cushion lever bearing into the swingarm to the depth "a" of 1.5 mm (0.059 in) from the edge with the special tool and suitable size socket wrench.

Special Tool

(A): 09924–84521

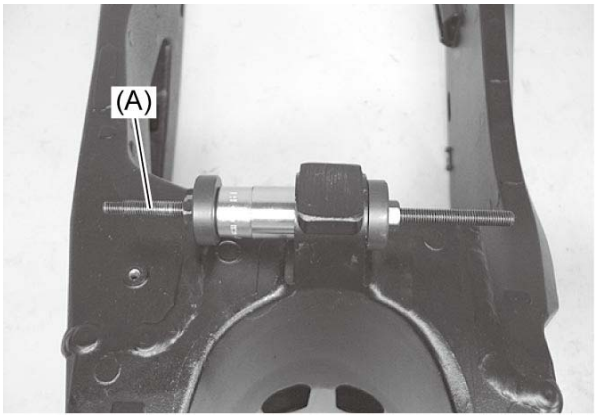

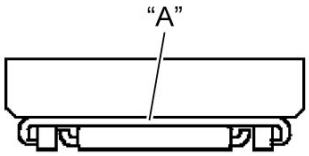

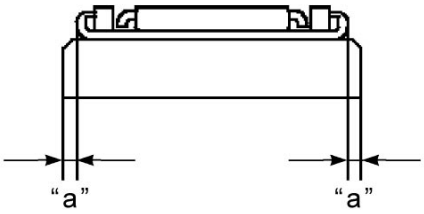

3) Install the center spacer.

4) Apply a small quantity of the grease to housing, when installing the bearings.

NOTE:
The stamped mark side of the pivot bearing faces outside.

“A”: Grease 99000–25011 (SUZUKI SUPER GREASE A)

5) Press the new pivot bearings into the swingarm to the depth “a” of 0 – 0.5 mm (0 – 0.019 in) from the edge with the special tool and suitable size socket.

Special Tool
(A): 09941–34513

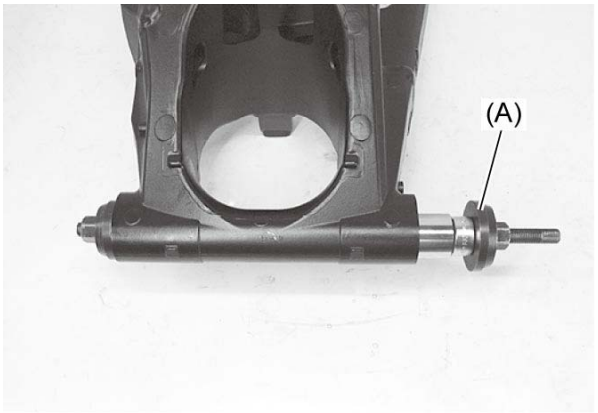

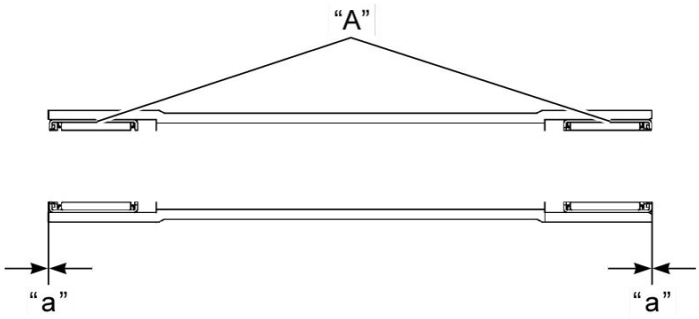

6) Apply grease to the bearings and dust seals.

“A”: Grease 99000–25011 (SUZUKI SUPER GREASE A)



Swingarm Inspection

Refer to ***Swingarm Removal and Installation***.

Spacers

Inspect the spacers for wear and damage. If any defects are found, replace the spacers with new ones.

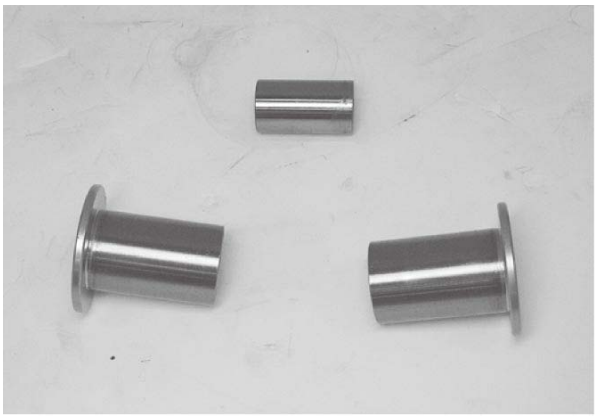

Chain Buffer

Inspect the chain buffer for wear and damage. If any defect is found, replace the chain buffer with a new one.



Plate

Inspect the plate for damage and excessive bend. If any defect is found, replace the plate with a new one.

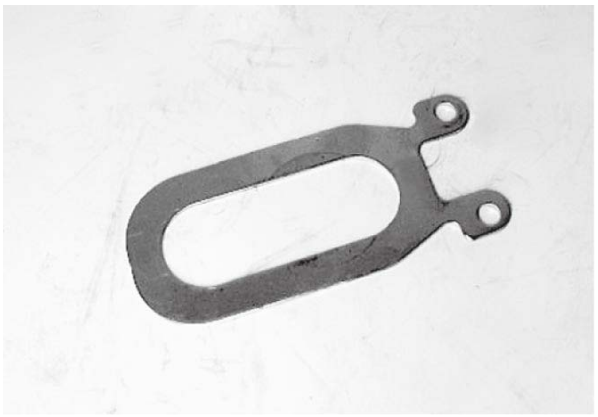

Swingarm Bearing

1) Insert the spacers into bearings.

2) Check the play by moving the spacers up and down. If excessive play is noted, replace the bearings with new ones. ☞

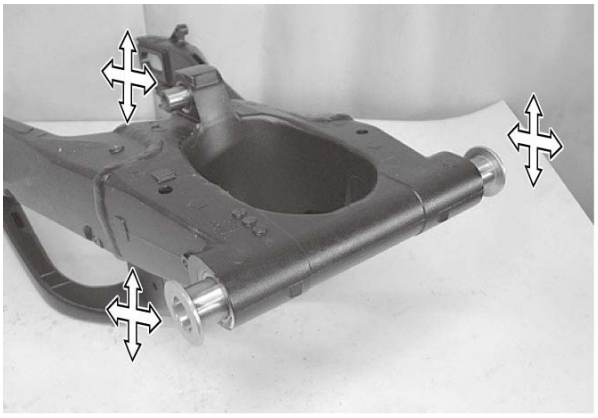

Swingarm

Inspect the swingarm for damage. If any defect is found, replace the swingarm with a new one.



Swingarm Pivot Shaft

Using a dial gauge, check the swingarm pivot shaft runout. If the runout exceeds the service limit, replace the pivot shaft.

Special Tool

(A): 09900–20607
(B): 09900–20701
(C): 09900–21304

Swingarm pivot shaft runout

Service limit: 0.3 mm (0.011 in)

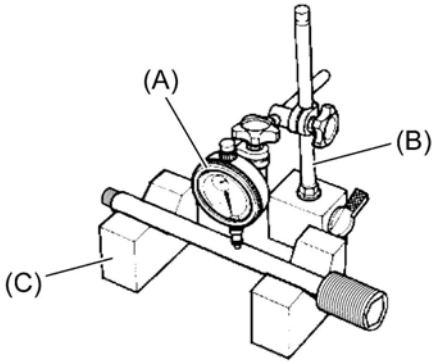

Swingarm Removal and Installation

Reference: Rear Suspension Components
Reference: Rear Suspension Assembly Construction

Removal

1) Cut the drive chain. Refer to ***Drive Chain Replacement***.
2) Remove the exhaust pipe and muffler. ☞
3) Remove the rear wheel assembly. ☞
4) Disconnect the rear brake hose (1) from the brake hose guides (2).

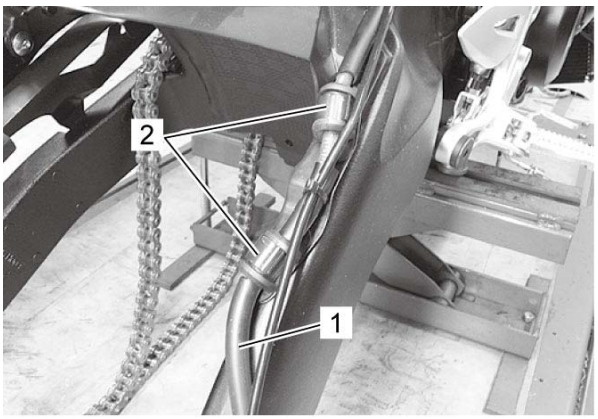

5) Remove the rear shock absorber (1). ☞
6) Remove the cushion lever mounting bolt and nut (2).

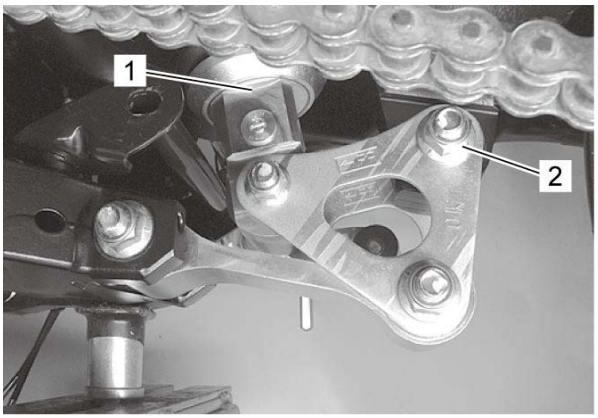

7) Remove the swingarm pivot shaft lock-nut (1) with the special tool.

Special Tool
(A): 09940–14940

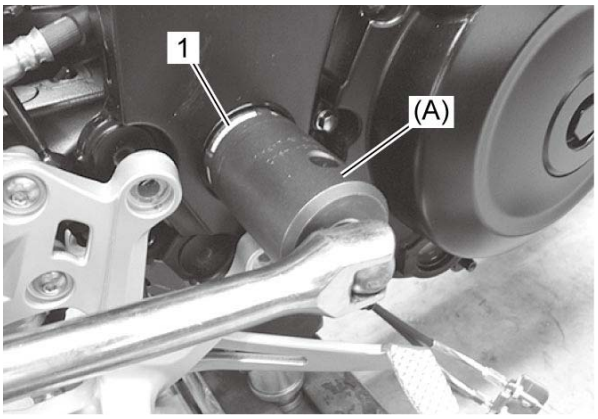

8) Hold the swingarm pivot shaft (1) with the special tool and remove the swingarm pivot nut (2).

Special Tool

(A): 09944–28321

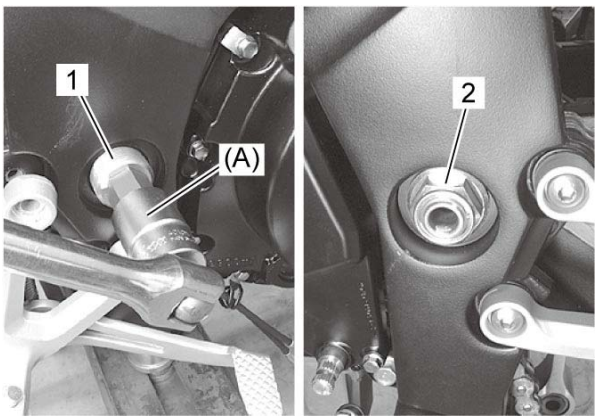

9) Remove the swingarm assembly by removing the swingarm pivot shaft (1) with the special tool.

Special Tool

(A): 09944–28321

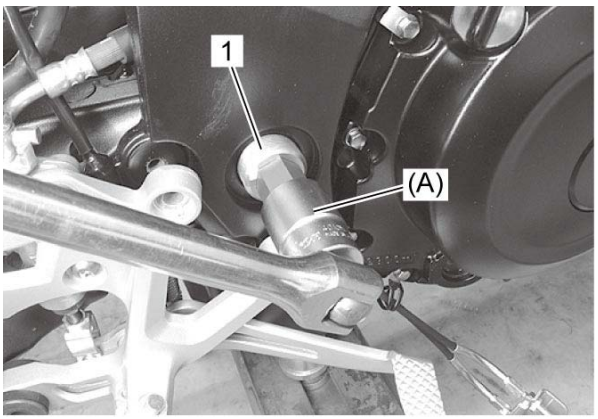

10) Remove the rear fender lower (1), chain case (2) and chain buffer (3) from the swingarm.

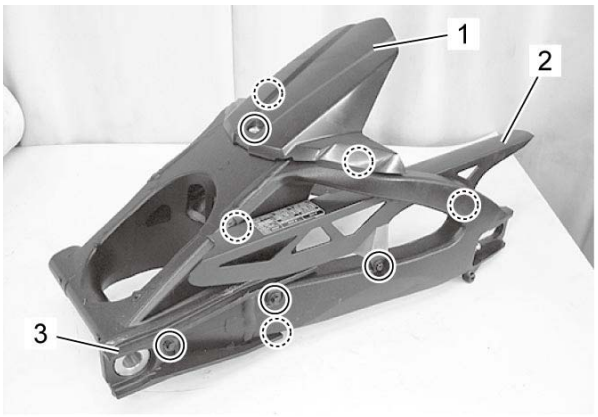

11) Remove the brake hose guide (1).

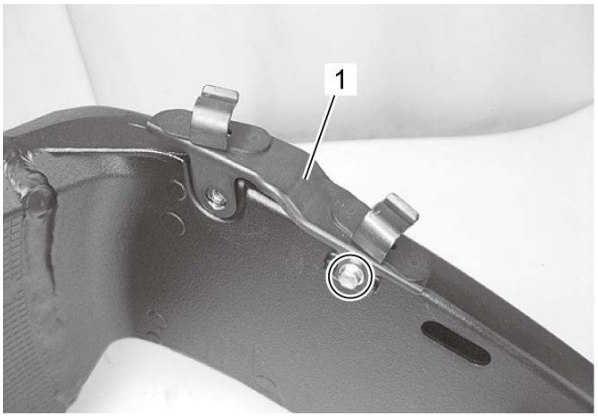

12) Remove the spacers (1) from the swingarm.

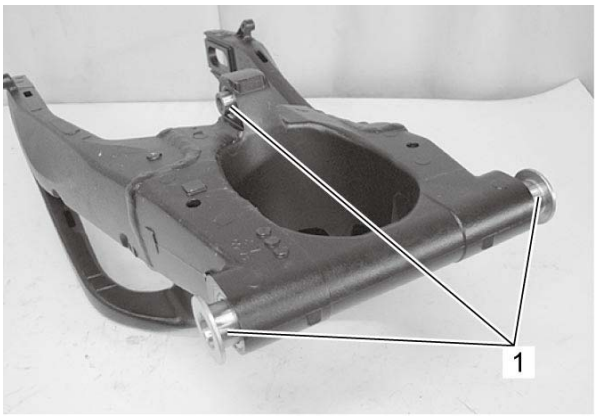

13) Remove the plate (1).

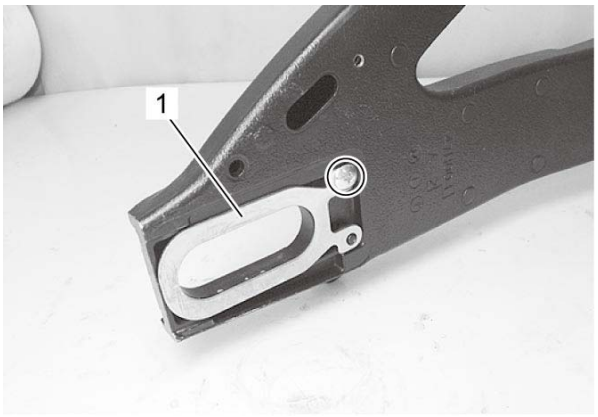

14) Remove the left and right drive chain adjuster bolts and nuts.

Installation

Reference: Swingarm Inspection

Install the swingarm in the reverse order of removal. Pay attention to the following points:

- Apply thread lock to the screw.

  "A": Thread lock cement 99000–32150 (THREAD LOCK CEMENT 1322D)

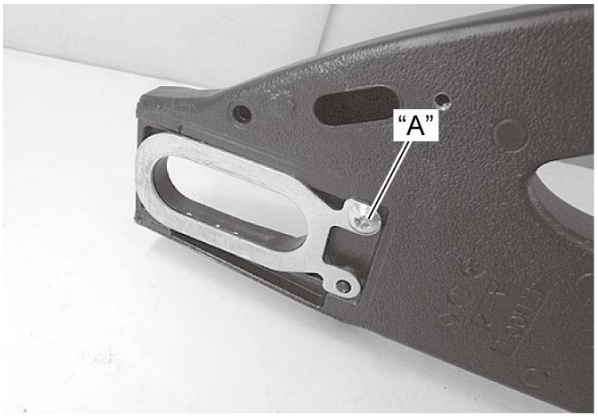

- Apply thread lock to the rear fender lower mounting bolts (1).

  "A": Thread lock cement 99000–32150 (THREAD LOCK CEMENT 1322D)

- Tighten the rear fender lower mounting bolts (1) and (2) to the specified torque.

  Tightening torque

  Rear fender lower mounting bolt (a): 10 N·m (1.0 kgf-m, 7.5 lbf-ft)

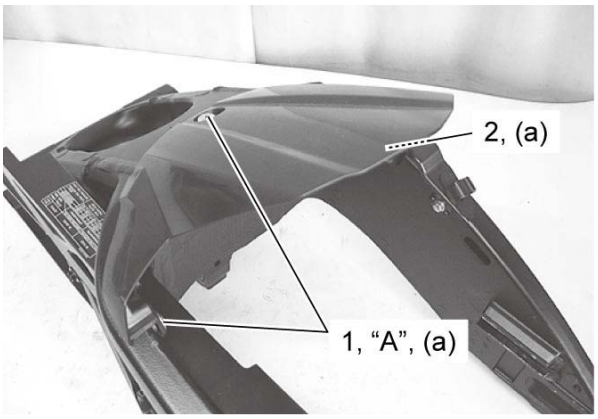

- When installing the swingarm assembly (1), pass the chain (2) to the swingarm.

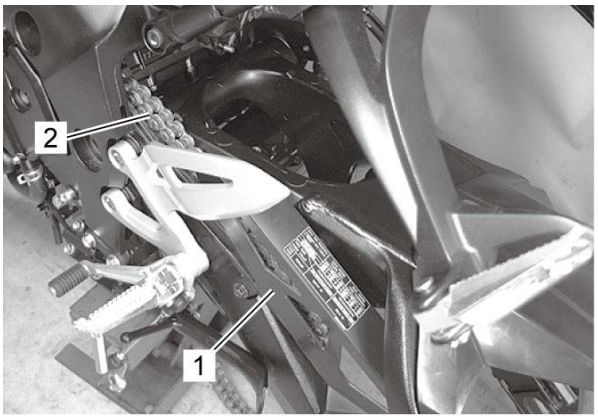

- Insert the swingarm pivot shaft (1) and tighten it to the specified torque.

Special Tool
(A): 09944–28321

Tightening torque
Swingarm pivot shaft (a): 15 N·m (1.5 kgf-m, 11.0 lbf-ft)

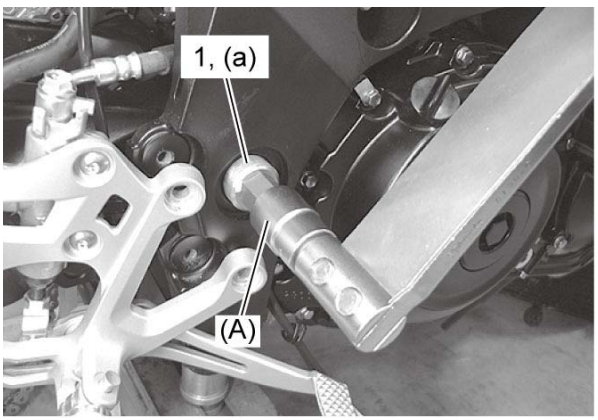

- Hold the swingarm pivot shaft (1) with the special tool and tighten the new swingarm pivot nut (2) to the specified torque.

Special Tool
(A): 09944–28321

Tightening torque
Swingarm pivot nut (a): 100 N·m (10.2 kgf-m, 74.0 lbf-ft)

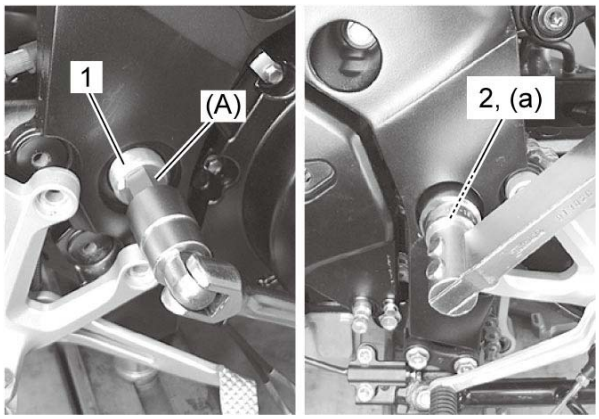

- Tighten the swingarm pivot lock-nut (1) to the specified torque with the special tool.

Special Tool
(A): 09940–14940

Tightening torque
Swingarm pivot lock-nut (a): 90 N·m (9.2 kgf-m, 66.5 lbf-ft)

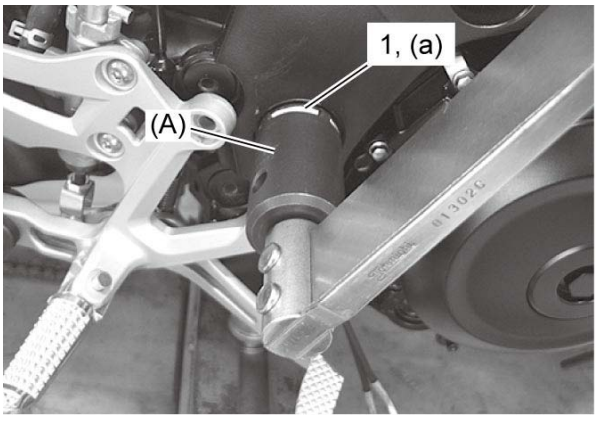

- Install the rear shock absorber (1). ☞
- Tighten the new cushion lever mounting nut (2) to the specified torque.

Tightening torque

Cushion lever mounting nut (a): 80 N·m (8.2 kgf-m, 59.0 lbf-ft)

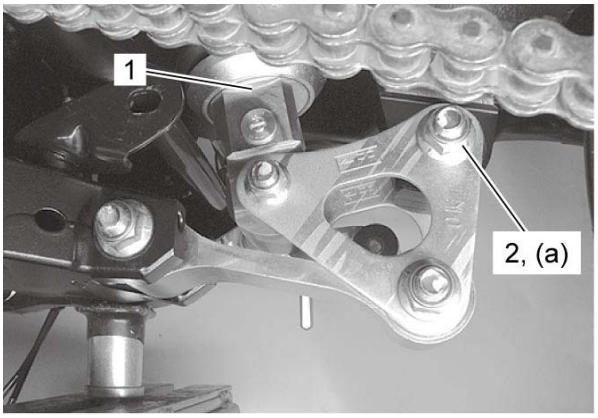

- Connect the rear brake hose into the brake hose guide. Refer to ***Rear Brake Hose Routing Diagram***.
- Install the exhaust pipe and muffler.
- Connect the drive chain. Refer to ***Drive Chain Replacement***.
- Adjust the drive chain slack, after connecting it. Refer to ***Drive Chain Inspection and Adjustment***.

Tightening Torque Specifications

Fastening part	Tightening torque			Note
	N·m	kgf-m	lbf-ft	
Rear shock absorber mounting nut	50	5.1	37.0	☞
Cushion rod (rear) mounting nut	80	8.2	59.0	☞
Cushion lever mounting nut	80	8.2	59.0	☞ ☞
Cushion rod mounting nut	80	8.2	59.0	☞ ☞
Rear shock absorber lower mounting nut	50	5.1	37.0	☞
Rear fender lower mounting bolt	10	1.0	7.5	☞
Swingarm pivot shaft	15	1.5	11.0	☞
Swingarm pivot nut	100	10.2	74.0	☞
Swingarm pivot lock-nut	90	9.2	66.5	☞

Reference:
For the tightening torques of fasteners not specified in this page, refer to:
Rear Suspension Components
Rear Suspension Assembly Construction
Fasteners Information

Recommended Service Material

Material	SUZUKI recommended product or Specification		Note
Grease	SUZUKI SUPER GREASE A	P/No.: 99000–25011	☞ ☞ ☞ ☞ ☞ ☞ ☞
Thread lock cement	THREAD LOCK CEMENT 1322D	P/No.: 99000–32150	☞ ☞

NOTE:
Required service material(s) is also described in:
Rear Suspension Components
Rear Suspension Assembly Construction

Special Tool

09900–20607	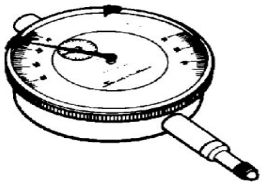	09900–20701	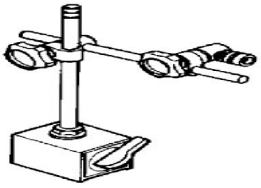
Dial gauge (10 x 0.01 mm)		Dial gauge chuck	
☞		☞	
09900–21304	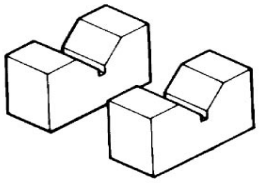	09921–20240	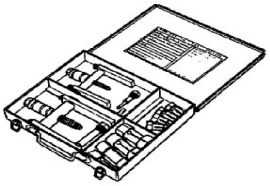
V blocks		Bearing remover set	
☞		☞ ☞ ☞	
09924–84521	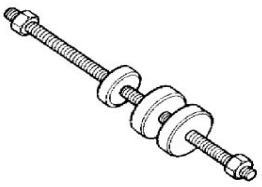	09940–14940	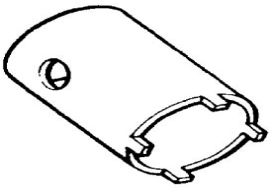
Bearing installer set		Swingarm pivot adjuster wrench	
☞ ☞ ☞		☞ ☞	
09941–34513	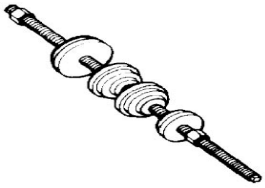	09943–88211	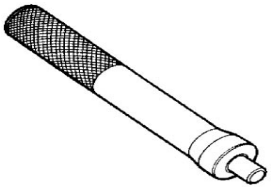
Bearing installer set		Pinion bearing installer	
☞		☞	
09944–28321	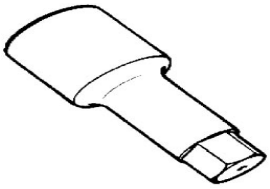		
Hexagon bit socket (19 mm : 1/2 sq.)			
☞ ☞ ☞ ☞			

Front Wheel Components

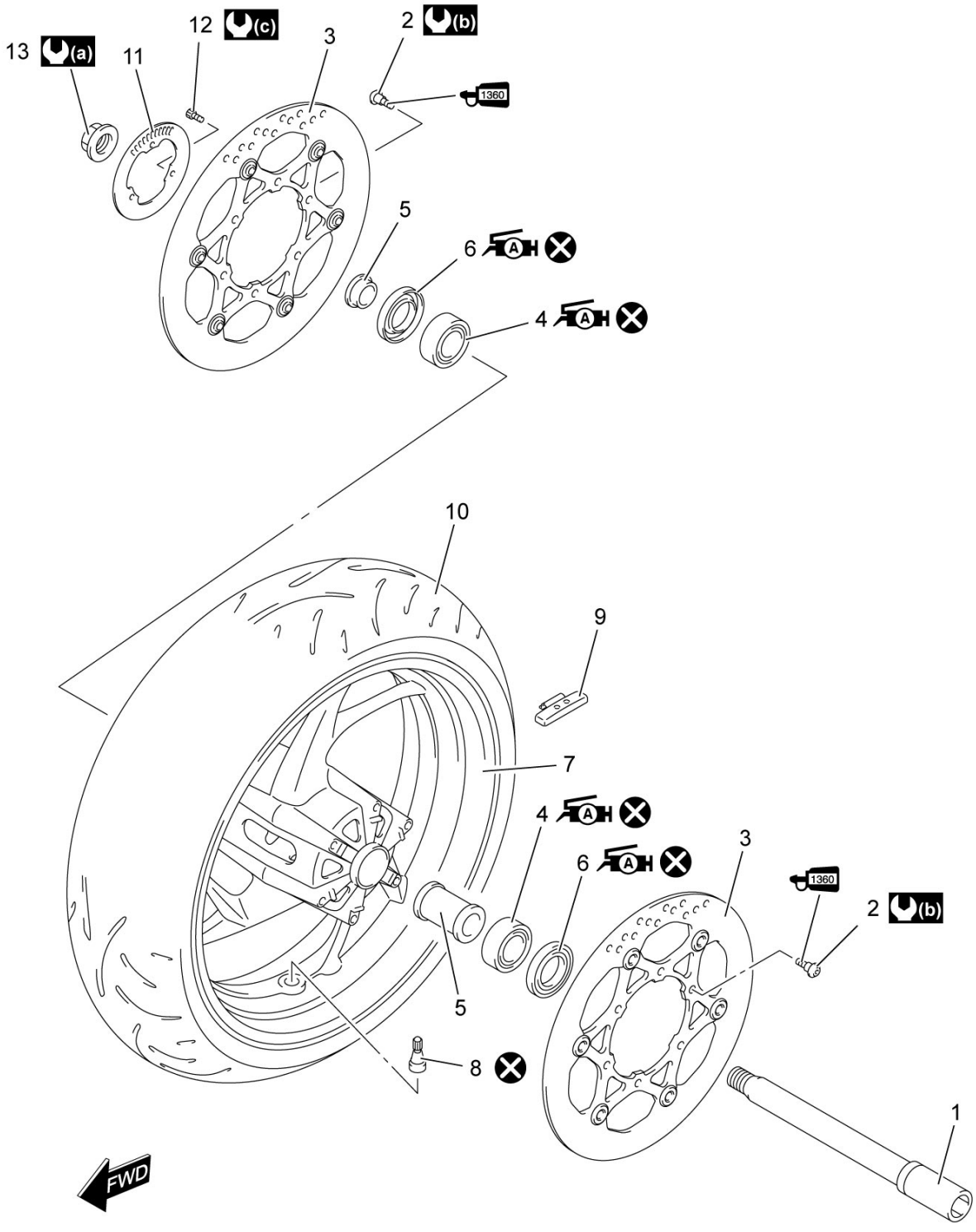

1.	Front axle	6.	Dust seal	11.	Front wheel speed sensor rotor	(c):	6.5 N·m (0.66 kgf-m, 4.80 lbf-ft)

2.	Brake disc bolt	7.	Front wheel	12.	Wheel speed sensor rotor bolt	 :	Apply grease.
3.	Brake disc	8.	Air valve	13.	Front axle nut	 :	Apply thread lock to the thread part.
4.	Bearing	9.	Wheel balancer	 :	100 N·m (10.2 kgf-m, 74.0 lbf-ft)	 :	Do not reuse.
5.	Spacer	10.	Front tire	 :	18 N·m (1.8 kgf-m, 13.5 lbf-ft)		

Front Wheel Assembly Construction

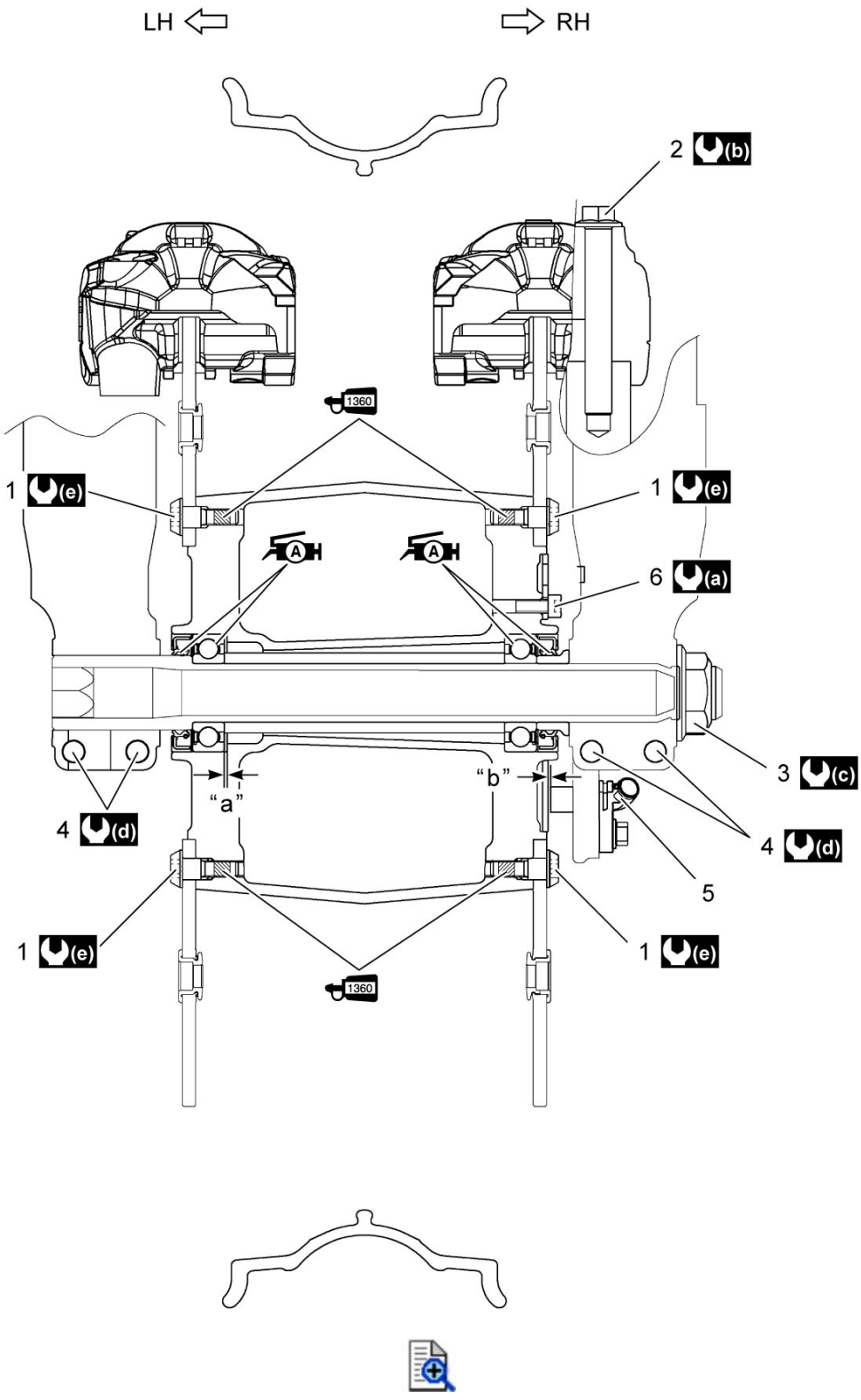

1.	Brake disc bolt	6.	Front wheel speed sensor rotor bolt	(c):	100 N·m (10.2 kgf-m, 74.0 lbf-ft)

2.	Brake caliper mounting bolt	“a”:	Clearance	(d):	23 N·m (2.3 kgf-m, 17.0 lbf-ft)
3.	Front axle nut	“b”:	0.38 – 1.05 mm (0.015 – 0.0413 in)	(e):	18 N·m (1.8 kgf-m, 13.5 lbf-ft)
4.	Front axle pinch bolt	(a):	6.5 N·m (0.66 kgf-m, 4.80 lbf-ft)	(A):	Apply grease.
5.	Front wheel speed sensor	(b):	39 N·m (4.0 kgf-m, 29.0 lbf-ft)	1360:	Apply thread lock to the thread part.

Front Wheel Assembly Removal and Installation

Reference: Front Wheel Components

Removal

1) Remove the front wheel speed sensor mounting bolt. ☞

2) Remove the front brake calipers. ☞

3) Remove the front axle nut (1).

4) Loosen the two axle pinch bolts (2) on the right front fork leg.

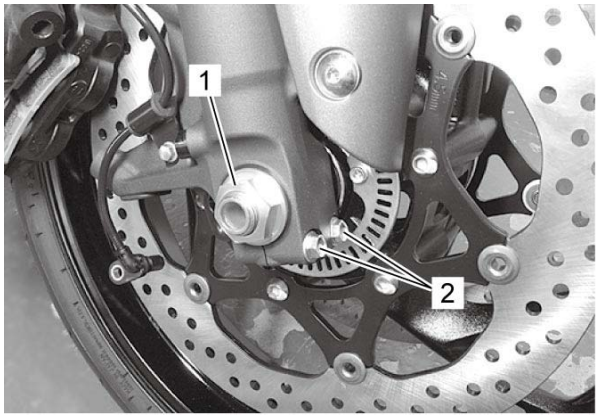

5) Raise the front wheel off the ground and support the motorcycle with a jack or a wooden block.

6) Loosen two axle pinch bolts (1) on the left front fork leg.

7) Draw out the front axle (2) and remove the front wheel.

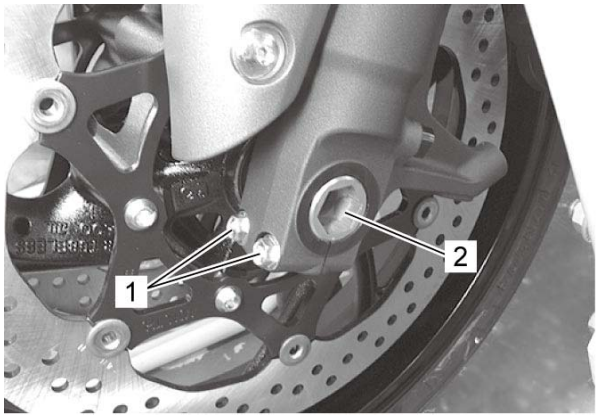

8) Remove the spacer (1).

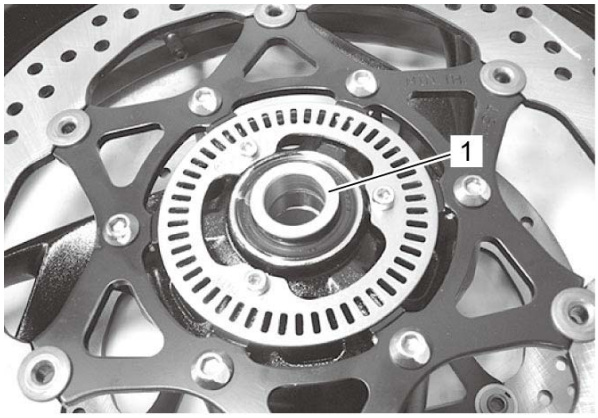

Installation

Reference: Wheel / Wheel Axle Inspection
Reference: Tire Inspection and Cleaning
Reference: Wheel Rim / Air Valve Inspection and Cleaning

1) Install the spacer (1) into the right side of the wheel.

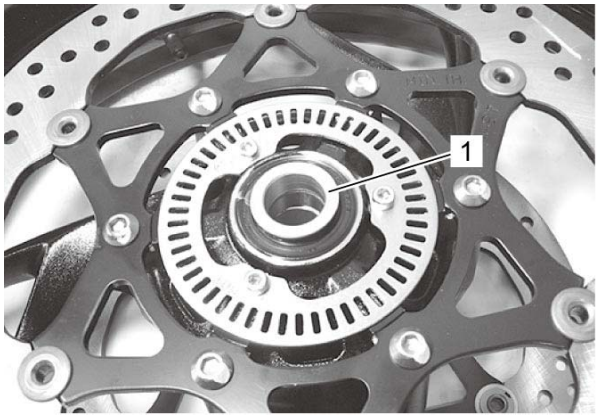

2) Install the front wheel with the front axle and tighten the front axle nut temporarily.

⚠WARNING:
The directional arrow on the tire should point to the wheel rotation, when installing the wheel.



3) Remove a jack or a wooden block.
4) Install the front brake calipers. ☞
5) Hold the front axle with the special tool and tighten the front axle nut (1) to the specified torque.

Special Tool

(A): 09944–28321

Tightening torque

Front axle nut (a): 100 N·m (10.2 kgf-m, 74.0 lbf-ft)

6) Tighten the two axle pinch bolts (2) on the right front fork leg to the specified torque.

Tightening torque

Front axle pinch bolt (b): 23 N·m (2.3 kgf-m, 17.0 lbf-ft)

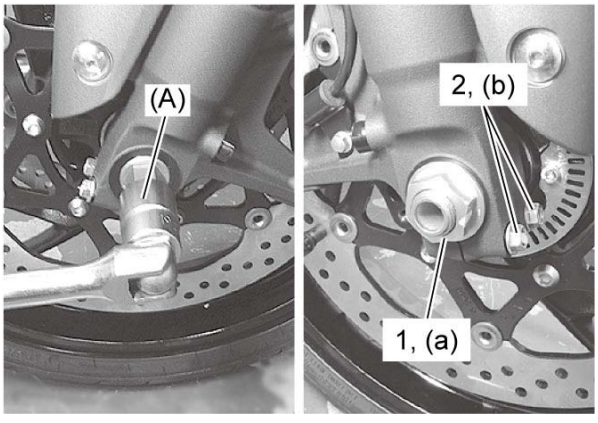

7) Move the front fork up and down 4 or 5 times to stabilize the front axle.



8) Tighten the two axle pinch bolts (1) on the left front fork leg to the specified torque.

Tightening torque

Front axle pinch bolt (a): 23 N·m (2.3 kgf-m, 17.0 lbf-ft)

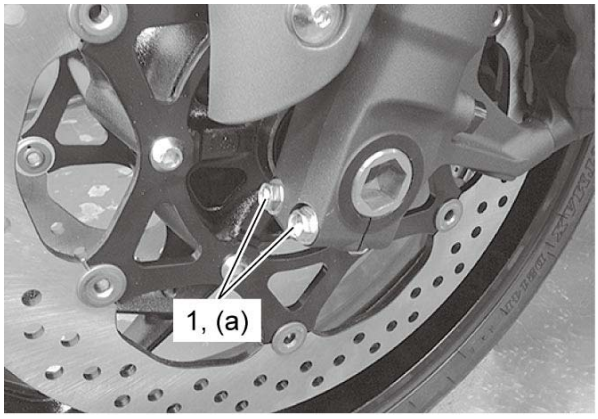

9) Install the front wheel speed sensor. ☞

Front Wheel Dust Seal / Front Wheel Bearing Removal and Installation

Refer to ***Front Wheel Assembly Removal and Installation***.
Reference: Front Wheel Components

Removal

1) Remove the front wheel speed sensor rotor. ☞

2) Remove the dust seals (1) on both sides with the special tool.

Special Tool
(A): 09913–50121

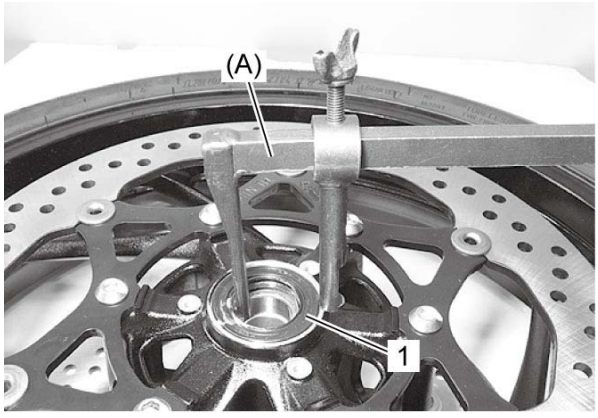

3) Remove the bearings (1) on both sides with the special tool.

Special Tool
(A): 09921–20240

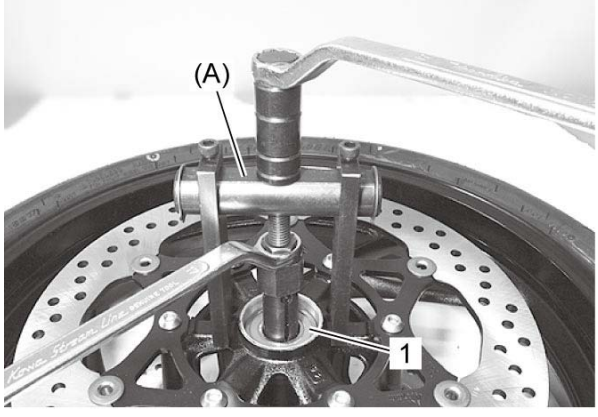

4) Remove the spacer (1).



Installation

1) Apply grease to the new wheel bearings.

Grease 99000–25011 (SUZUKI SUPER GREASE A)

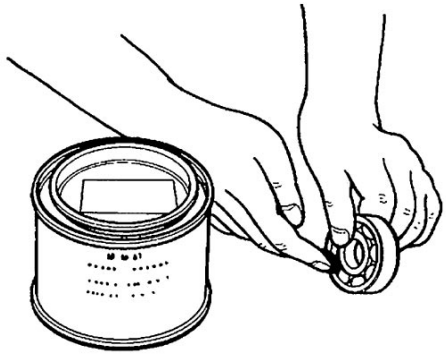

2) First install the right wheel bearing, then install the spacer (1) and left wheel bearing with the special tools.

NOTICE:
The sealed cover of the bearing must face outside.

Special Tool

(A): 09941–34513
(B): 09913–70210

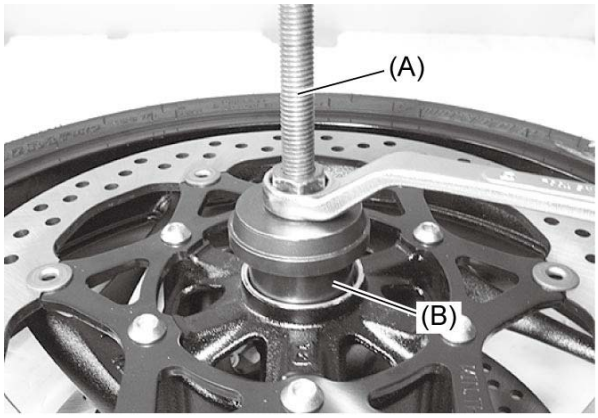

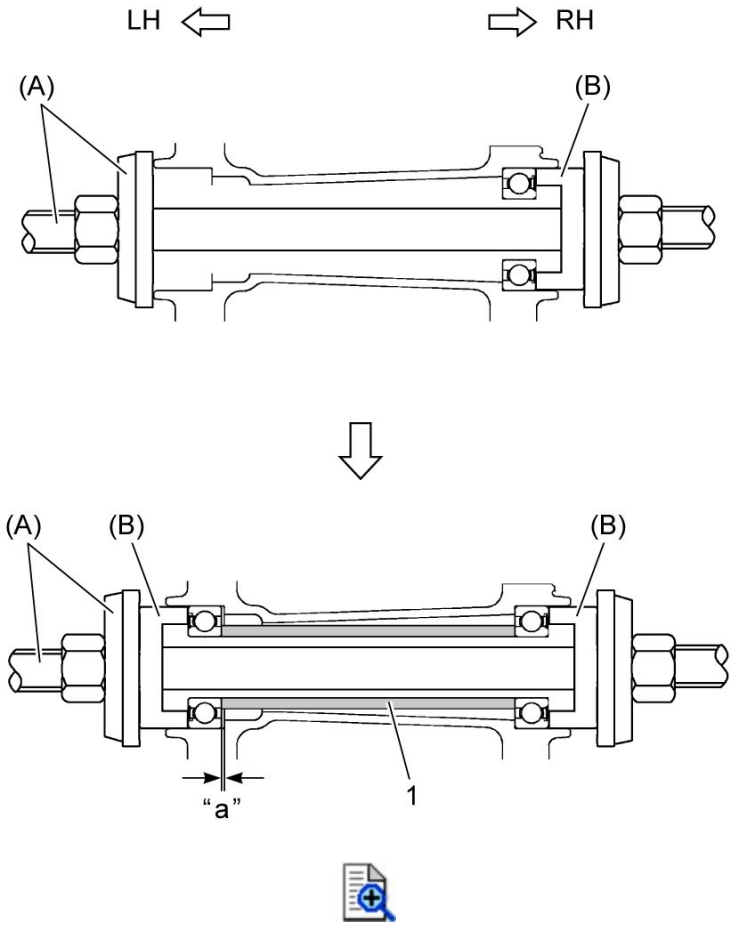

"a":	Clearance

3) Install the new dust seals (1) on both sides with the special tool.

Special Tool

(A): 09913–70210

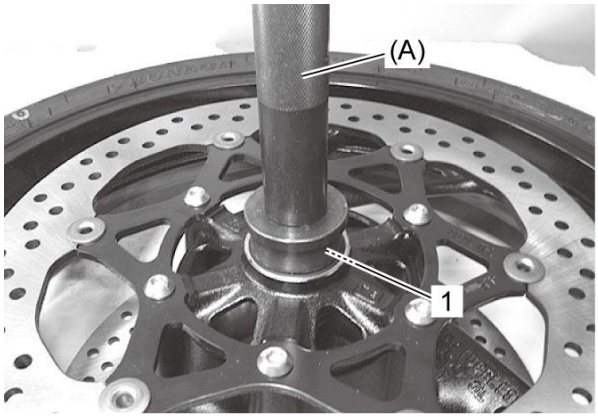

4) Apply grease to the lip of the dust seals.
"A": Grease 99000–25011 (SUZUKI SUPER GREASE A)

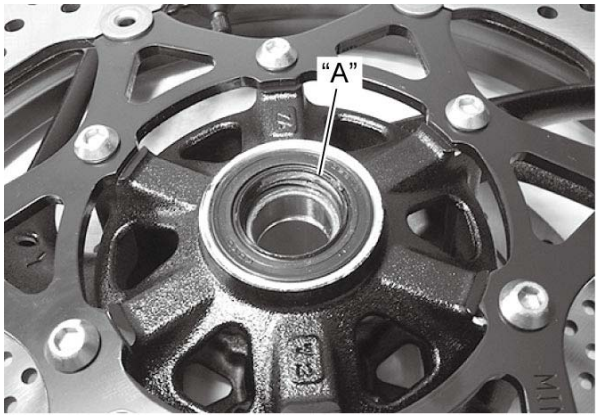

5) Install the front wheel speed sensor rotor. ☞

Air Valve Removal and Installation

Refer to ***Tire Removal and Installation***.

Removal

1) Remove the air valve (1) from the wheel.

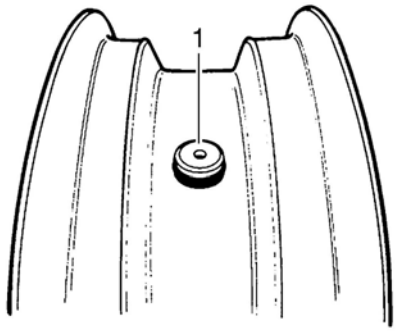

Installation

1) Clean off the dirt around the valve hole (1).

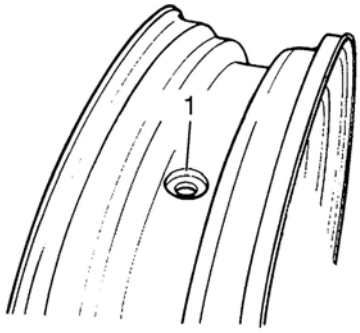

2) Install the new air valve (1) into the air valve hole with a special tire lubricant or neutral soapy liquid applied at the valve lip (2).

NOTICE:
Be careful not to damage the valve lip of the air valve.

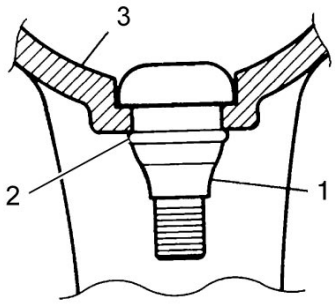

3.	Wheel

Rear Wheel Assembly Construction

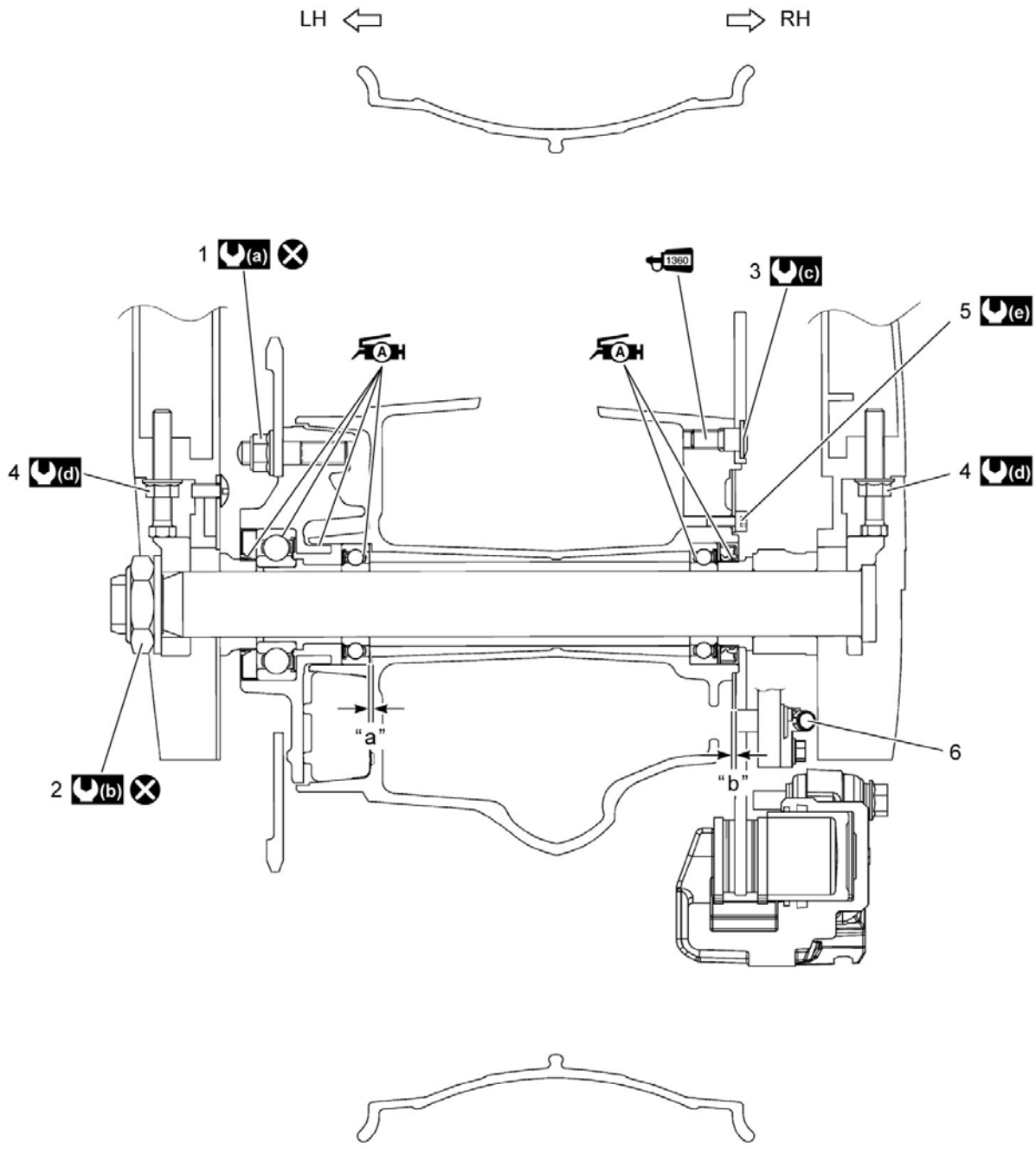

1.	Rear sprocket nut	"a":	Clearance	(e):	6.5 N·m (0.66 kgf-m, 4.80 lbf-ft)
2.	Rear axle nut	"b":	0.42 – 1.08 mm (0.017 – 0.0425 in)	A:	Apply grease.
3.	Brake disc bolt	(a):	60 N·m (6.1 kgf-m, 44.5 lbf-ft)	1360:	Apply thread lock to the thread part.

4.	Chain adjuster lock-nut	(b):	100 N·m (10.2 kgf-m, 74.0 lbf-ft)	:	Do not reuse.
5.	Rear wheel speed sensor rotor bolt	(c):	23 N·m (2.3 kgf-m, 17.0 lbf-ft)		
6.	Rear wheel speed sensor	(d):	22 N·m (2.2 kgf-m, 16.5 lbf-ft)		

Rear Wheel Assembly Removal and Installation

Reference: Rear Wheel Components

Removal

1) Remove the rear wheel speed sensor bracket. ☞

2) Loosen the rear axle nut (1).

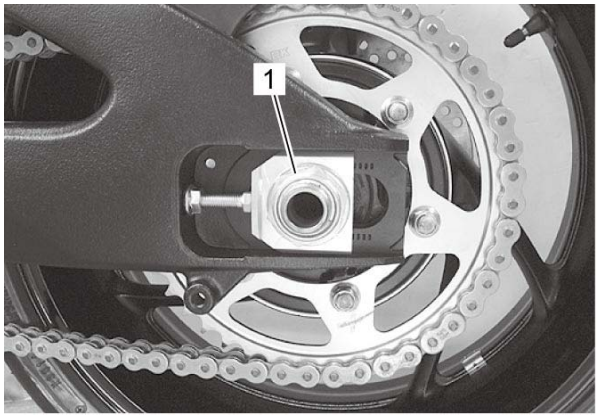

3) Raise the rear wheel off the ground and support the motorcycle with a jack or wooden block.

4) Loosen the left and right lock-nuts (1) and turn in the adjuster bolts (2).

5) Remove the rear axle nut (3).

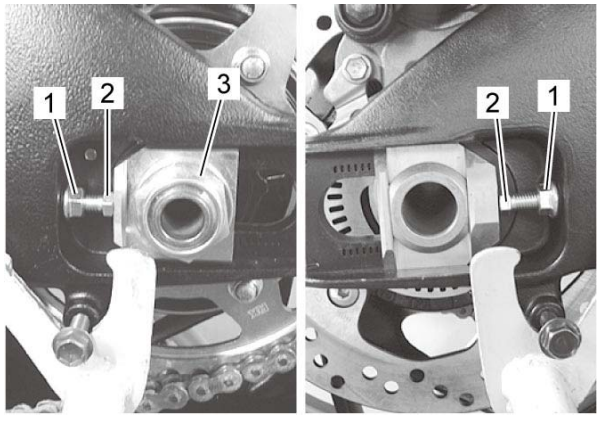

6) Draw out the rear axle.

7) Remove the drive chain (1) from the rear sprocket.

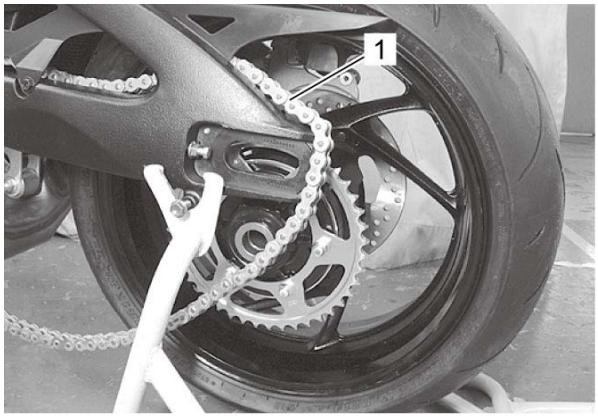

8) Remove the rear brake caliper (1) from the swingarm.
9) Remove the rear wheel.

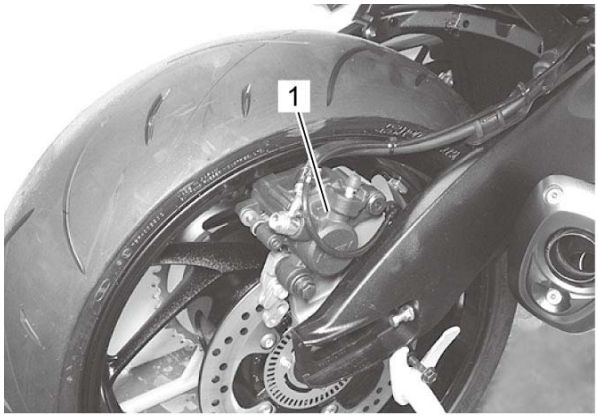

10) Remove the left and right spacers (1).

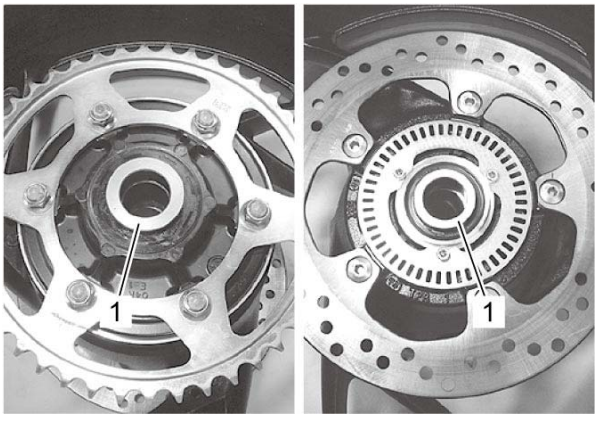

Installation

Reference: Wheel / Wheel Axle Inspection
Reference: Tire Inspection and Cleaning
Reference: Wheel Rim / Air Valve Inspection and Cleaning

1) Install the left and right spacers (1).

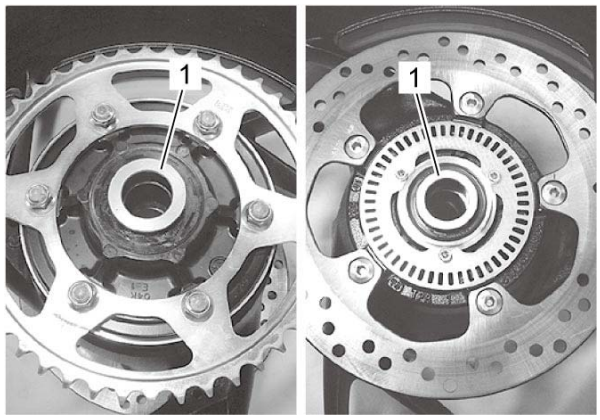

2) Install the rear wheel.
3) Install the rear brake caliper to the swingarm.
4) Install the drive chain to the rear sprocket.
5) Install the left chain adjuster (1) and right chain adjuster (2) to the swingarm.

NOTE:
Right and left shape is different.

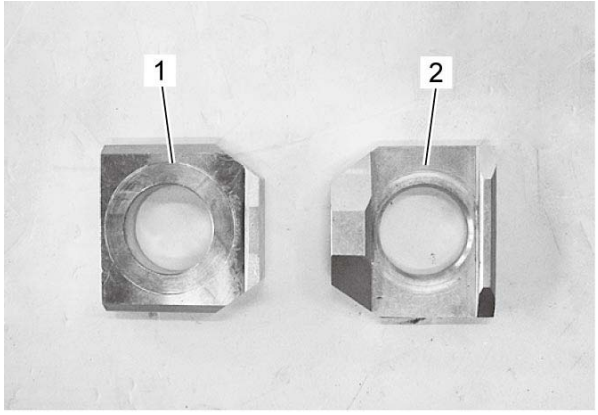

6) Install the rear axle (1) and washer (2).
7) Tighten the new rear axle nut (3) temporarily.

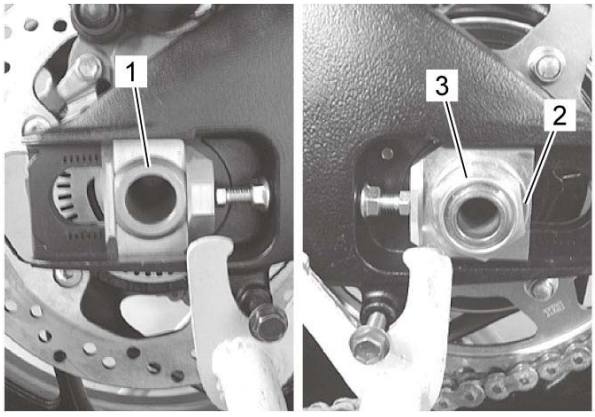

8) Remove the jack or a wooden block.

9) Adjust the chain slack. Refer to ***Drive Chain Inspection and Adjustment***.

10) Install the rear wheel speed sensor bracket. ☞

Rear Wheel Components

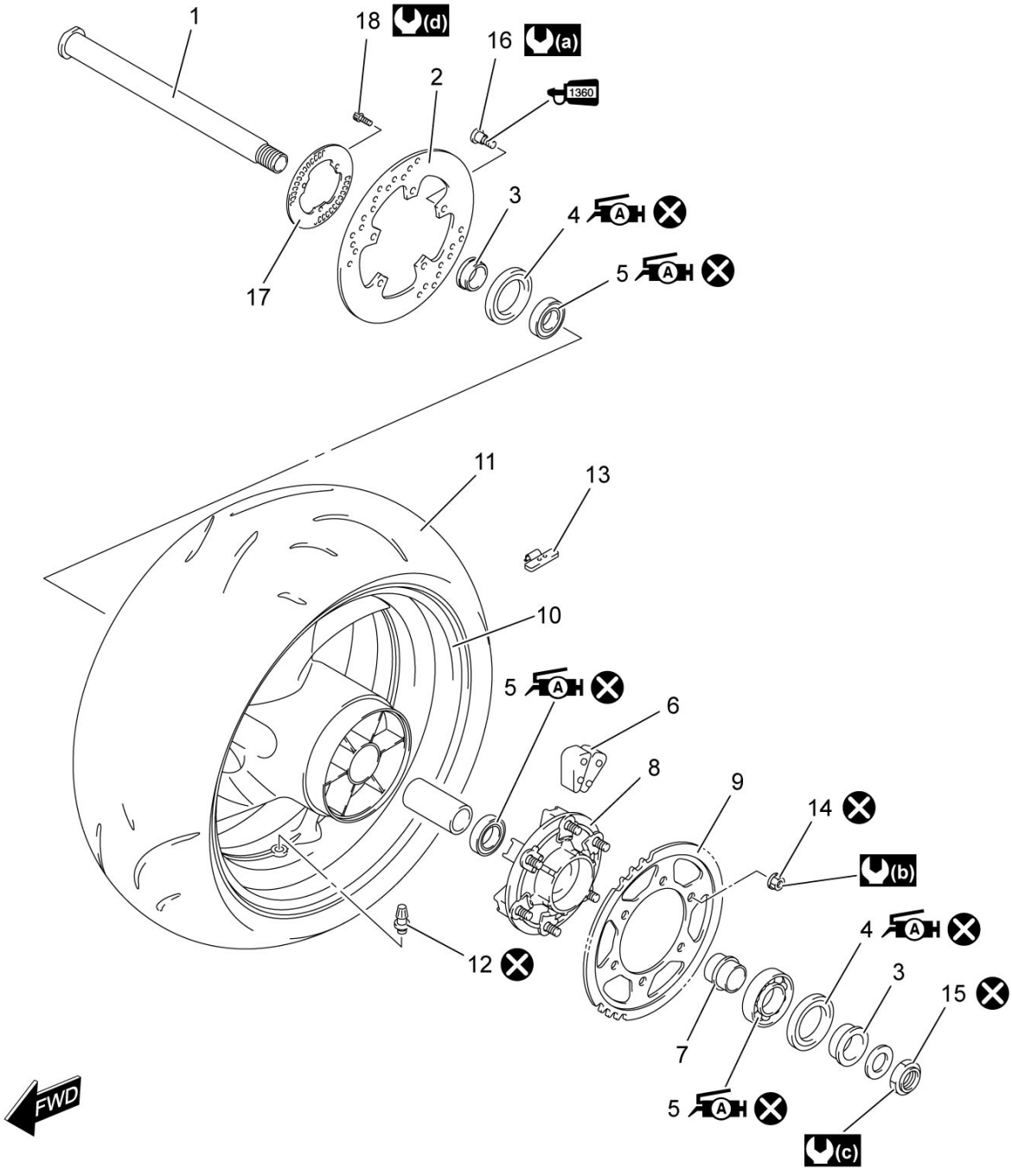

1.	Rear axle	10.	Rear wheel	(a):	23 N·m (2.3 kgf-m, 17.0 lbf-ft)
2.	Brake disc	11.	Rear tire	(b):	60 N·m (6.1 kgf-m, 44.5 lbf-ft)
3.	Spacer	12.	Air valve	(c):	100 N·m (10.2 kgf-m, 74.0 lbf-ft)

4.	Dust seal	13.	Wheel balancer	 :	6.5 N·m (0.66 kgf-m, 4.80 lbf-ft)
5.	Bearing	14.	Rear sprocket nut	 :	Apply grease.
6.	Rear wheel damper	15.	Rear axle nut	 :	Apply thread lock to the thread part.
7.	Retainer	16.	Brake disc bolt	 :	Do not reuse.
8.	Rear sprocket mounting drum	17.	Wheel speed sensor rotor		
9.	Rear sprocket	18.	Wheel speed sensor rotor bolt		

Rear Wheel Damper Inspection

Inspect the rear wheel dampers for wear and damage. Replace the damper if there is anything unusual.



Rear Wheel Damper Removal and Installation

Refer to ***Rear Sprocket Mounting Drum Assembly Removal and Installation***.

Removal

Remove the rear wheel dampers (1).

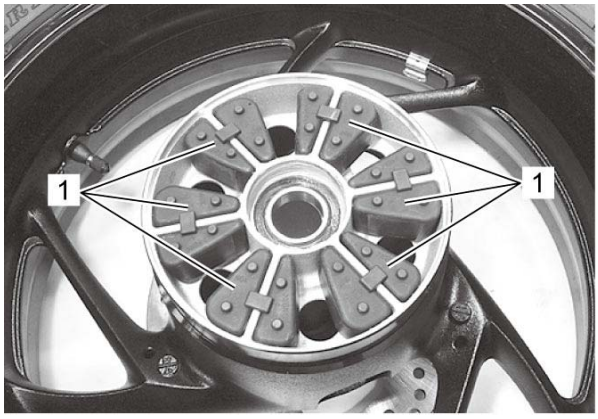

Installation

Reference: Rear Wheel Damper Inspection

Install the rear wheel dampers in the reverse order of removal.

Rear Wheel Dust Seal / Rear Wheel Bearing Removal and Installation

Refer to ***Rear Sprocket Mounting Drum Assembly Removal and Installation***.
Reference: Rear Wheel Components

Removal

1) Remove the rear wheel dampers. ☞

2) Remove the rear wheel speed sensor rotor. ☞

3) Remove the dust seal (1) with the special tool.

Special Tool
(A): 09913–50121

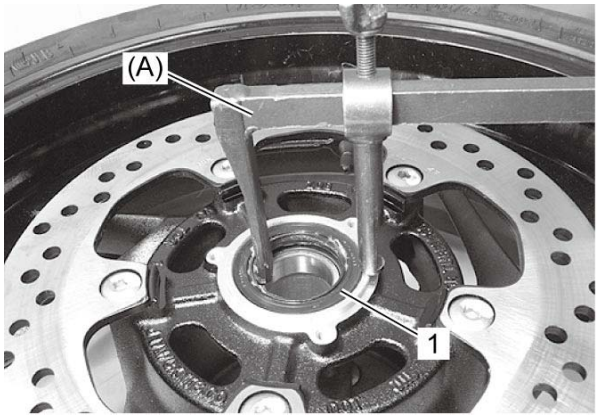

4) Remove the bearings (1) on both sides with the special tool.

Special Tool
(A): 09921–20240

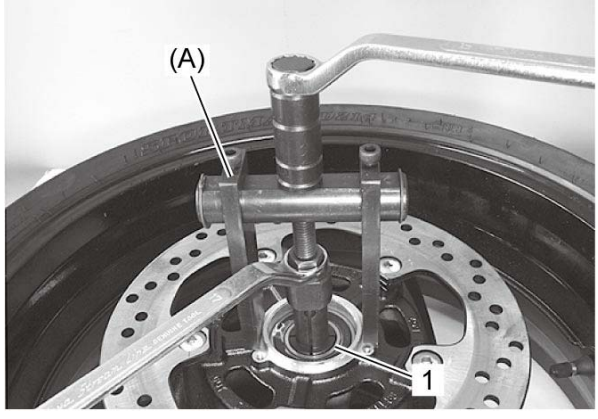

5) Remove the spacer (1).

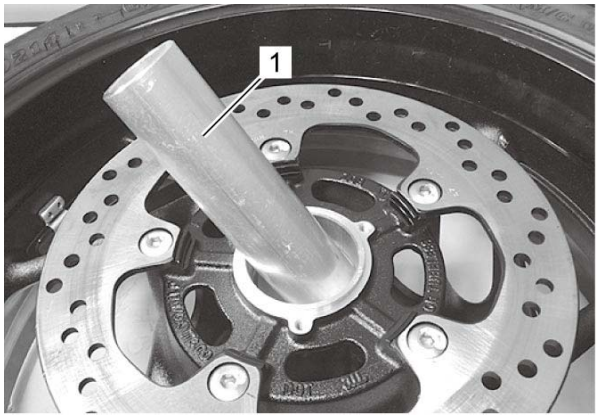

Installation

1) Apply grease to the new wheel bearings.

Grease 99000–25011 (SUZUKI SUPER GREASE A)

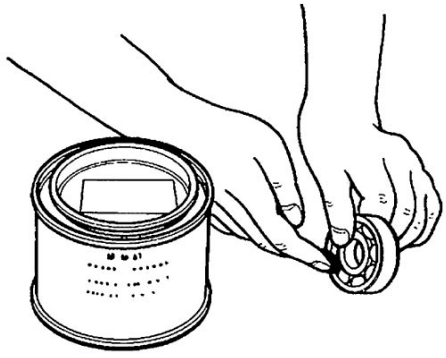

2) First install the right wheel bearing, then install the spacer (1) and left wheel bearing with the special tools.

NOTICE:
The sealed cover of the bearing must face outside.

Special Tool

(A): 09941–34513
(B): 09924–84510

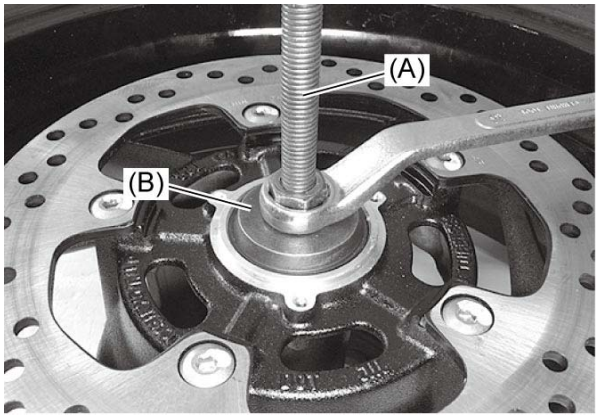

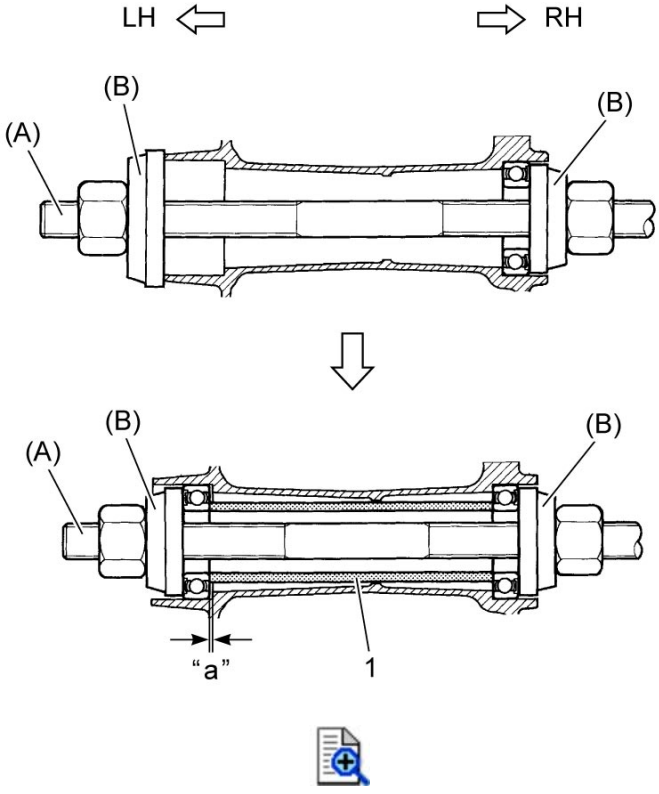

"a":	Clearance

3) Install a new dust seal (1) with the special tool.

Special Tool

(A): 09913–70210

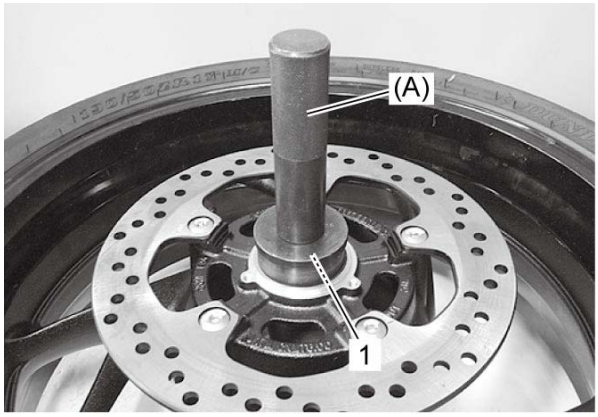

4) Apply grease to the dust seal lip.

"A": Grease 99000–25011 (SUZUKI SUPER GREASE A)

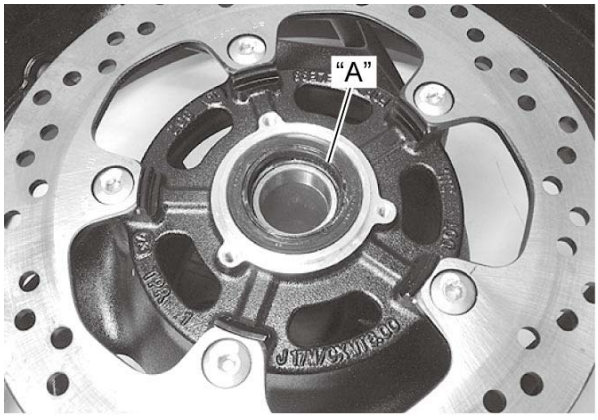

5) Install the rear wheel speed sensor rotor. ☞

6) Install the rear wheel dampers. ☞

Tire Inspection and Cleaning

Tire

Wipe the tire clean and check for the following points:
- Nick and rupture on side wall
- Tread separation
- Abnormal, uneven wear on tread
- Surface damage on bead
- Localized tread wear due to skidding (Flat spot)
- Abnormal condition of inner liner

Tire size

Front [Standard]: 120/70ZR17M/C (58W)
Rear [Standard]: 190/50ZR17M/C (73W)

Tire type

Front [Standard]: DUNLOP/D214F M
Rear [Standard]: DUNLOP/D214 M

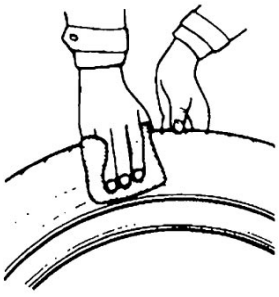

Tire tread condition

Operating the motorcycle with excessively worn tires will decrease riding stability and consequently invite a dangerous situation. It is highly recommended to replace a tire when the remaining depth of tire tread reaches the following specification.

Tire tread depth

Recommend depth
Front [Standard]: 1.6 mm (0.062 in)
Rear [Standard]: 2.0 mm (0.078 in)

Special Tool

09900–20805

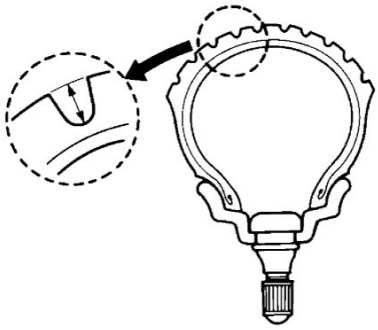

Tire pressure

If the tire pressure is too high or too low, steering will be adversely affected and tire wear increased. Therefore, maintain the correct tire pressure for good roadability or shorter tire life will result. Cold inflation tire pressure is as follows.

Cold inflation tire pressure

Solo riding
Front [Standard]: 250 kPa (2.50 kgf/cm^2, 36 psi)
Rear [Standard]: 290 kPa (2.90 kgf/cm^2, 42 psi)
Dual riding
Front [Standard]: 250 kPa (2.50 kgf/cm^2, 36 psi)
Rear [Standard]: 290 kPa (2.90 kgf/cm^2, 42 psi)

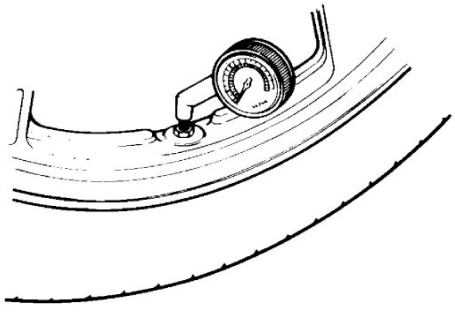

Tire Removal and Installation

Refer to ***Front Wheel Assembly Removal and Installation***.
Refer to ***Rear Sprocket Mounting Drum Assembly Removal and Installation***.

Removal

⚠CAUTION:
For removal and installation procedure of tire, follow the instructions given by the tire changer manufacturer.

NOTE:
When removing the tire in case of repair or inspection, mark the tire with a chalk to indicate the tire position relative to the valve position.

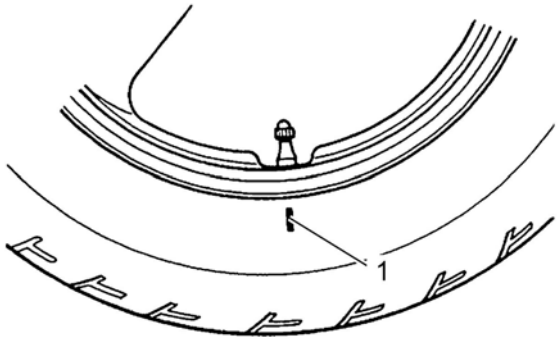

1.	Chalk mark

Installation

Reference: Wheel Rim / Air Valve Inspection and Cleaning

1) Apply tire lubricant to the tire bead.

NOTICE:
- **Do not use oil, grease or gasoline in place of tire bead lubricant.**
- **Do not reuse the air valve which has been once removed.**

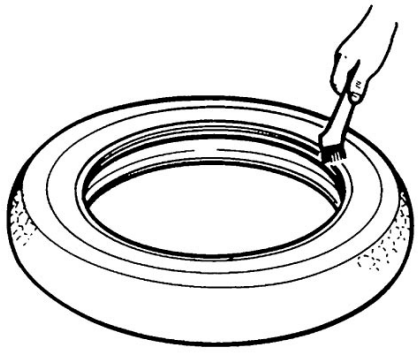

2) Install the tire aligning the arrow (1) on the side wall with the direction of the wheel rotation.

NOTICE:
- **When installing a repaired tire, align the chalk mark put on the tire at the time of removal with the valve position.**
- **When installing a new tire, align the light point mark (2) on the tire side wall with the valve position.**

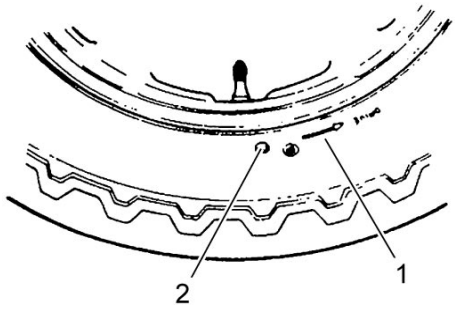

3) Bounce the tire several times while rotating. This makes the tire bead expand outward to contact the wheel, thereby facilitating air inflation.

4) Inflate the tire.

⚠WARNING:
- **Do not stand over a tire being inflated. Tire bead may break when the bead snaps over rim's safety hump and cause serious personal injury.**
- **Do not inflate tires exceeding 400 kPa (4.0 kgf/cm^2, 57 psi). Over-inflation may cause the bead to break, which may cause serious personal injury.**

5) Check the "rim line" (1) cast on the tire side walls. The line must be equidistant from the wheel rim all around. If the distance between the rim line (1) and wheel rim varies, this indicates that the bead is not properly seated. If this is the case, deflate the tire completely and unseat the bead for both sides. Coat the bead with lubricant and fit the tire again.

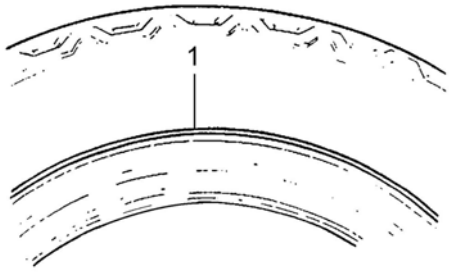

6) When the bead has been fitted properly, install the valve core and adjust the pressure to specification. ☞

7) As necessary, adjust the tire balance. ☞

Wheel / Wheel Axle Inspection

Refer to ***Front Wheel Assembly Removal and Installation***.
Refer to ***Rear Wheel Assembly Removal and Installation***.

Wheel

1) Remove the brake pads.
- Front: ☞
- Rear: ☞

2) Make sure that the wheel runout checked as shown does not exceed the service limit. An excessive runout is usually due to worn or loosened wheel bearings and can be reduced by replacing the bearings.
- Front: ☞
- Rear: ☞

If bearing replacement fails to reduce the runout, replace the wheel.

Wheel rim runout

Front
Axial & Radial [Limit]: 2.0 mm (0.08 in)
Rear
Axial & Radial [Limit]: 2.0 mm (0.08 in)

Special Tool

(A): 09900–20607

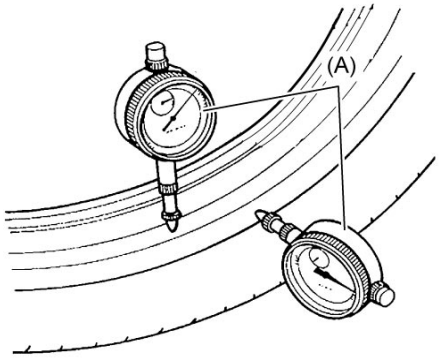

3) Install the brake pads.
- Front: ☞
- Rear: ☞

Wheel Axle

Using a dial gauge, check the wheel axle for runout, If the runout exceeds the limit, replace the wheel axle.

Wheel axle runout

Front & Rear [Limit]: 0.25 mm (0.010 in)

Special Tool

(A): 09900–20607
(B): 09900–20701

(C): 09900–21304

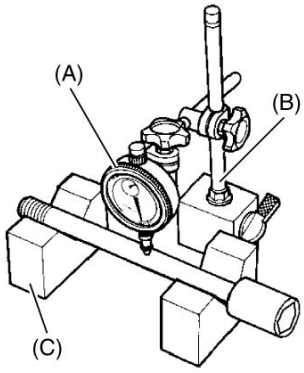

Dust Seal

Inspect the dust seals lip (1) for wear or damage. If any defects are found, replace the dust seals with new ones.

- Front:
- Rear:



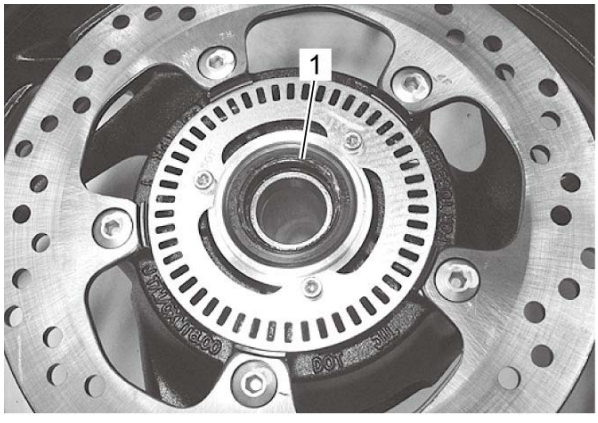

Wheel Bearing

1) Remove the rear sprocket mounting drum assembly. ☞

2) Inspect the play of the wheel bearings by hand while they are in the wheel. Rotate the inner race by hand to inspect for abnormal noise and smooth rotation. Replace the bearing if there is anything unusual.

- Front: ☞
- Rear: ☞

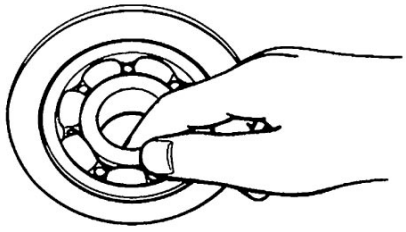

3) Install the rear sprocket mounting drum assembly. ☞

Brake Disc

Refer to ***Front Brake Disc Inspection***.
Refer to ***Rear Brake Disc Inspection***.

Wheel Speed Sensor Rotor

Refer to ***Wheel Speed Sensor and Sensor Rotor Inspection***.

Rear Sprocket

Refer to ***Rear Sprocket Mounting Drum / Sprocket Inspection***.

Wheel Balance Check and Adjustment

Refer to ***Front Wheel Assembly Removal and Installation***.
Refer to ***Rear Sprocket Mounting Drum Assembly Removal and Installation***.

1) Check the wheel balance using the balancer and adjust the wheel balance if necessary.

NOTICE:
For operating procedures, refer to the instructions supplied by the wheel balancer manufacturer.

2) When installing the new balancer weight (1) to the wheel (2), set the balancer weight on center rib of wheel.

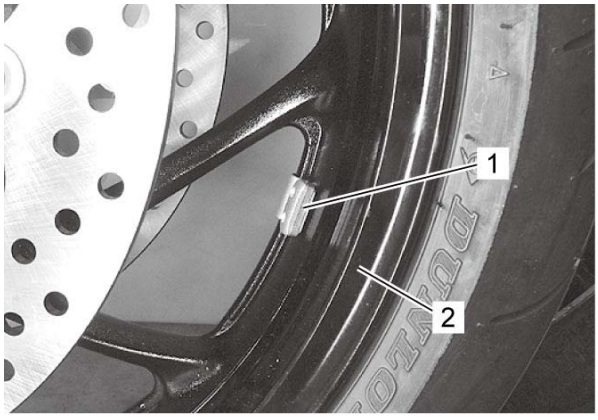

3) Recheck the wheel balance.

Wheel Rim / Air Valve Inspection and Cleaning

Refer to ***Tire Removal and Installation***.
Refer to ***Air Valve Removal and Installation***.

Wheel Rim

Wipe the wheel clean and check for the following points:
- Distortion and crack.
- Any flaws and scratches at the bead seating area.
- Wheel rim runout. ☞

Wheel rim size

Front [Standard]: 17 M/C x MT 3.50
Rear [Standard]: 17 M/C x MT 6.00



Air Valve

Inspect the air valve (1) for peeling and damage. If any defect is found, replace the air valve with a new one.

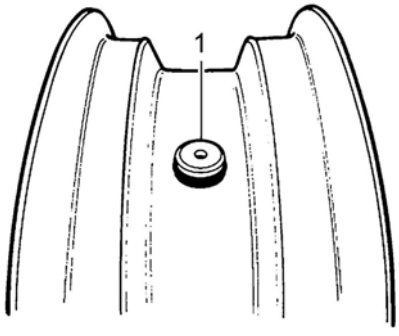

Inspect the valve core seal (1) for wear and damage. If any defect is found, replace the valve core with a new one.

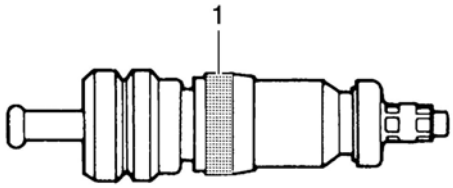
1

Tightening Torque Specifications

Fastening part	Tightening torque			Note
	N·m	kgf-m	lbf-ft	
Front axle nut	100	10.2	74.0	☞
Front axle pinch bolt	23	2.3	17.0	☞ ☞

Reference:
For the tightening torques of fasteners not specified in this page, refer to:
Front Wheel Components
Front Wheel Assembly Construction
Rear Wheel Components
Rear Wheel Assembly Construction
Fasteners Information

Recommended Service Material

Material	SUZUKI recommended product or Specification		Note
Grease	SUZUKI SUPER GREASE A	P/No.: 99000–25011	☞ ☞ ☞ ☞

NOTE:

Required service material(s) is also described in:

Front Wheel Components

Front Wheel Assembly Construction

Rear Wheel Components

Rear Wheel Assembly Construction

Special Tool

09900–20607 Dial gauge (10 x 0.01 mm)	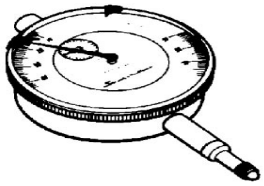	09900–20701 Dial gauge chuck	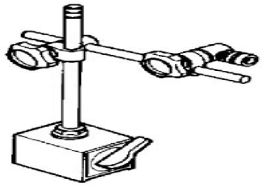
09900–20805 Tire depth gauge	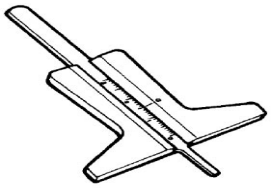	09900–21304 V blocks	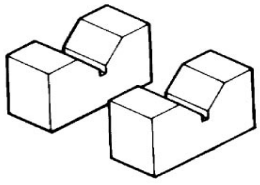
09913–50121 Oil seal remover	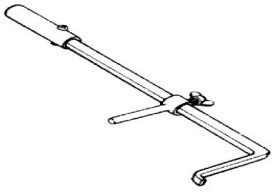	09913–70210 Bearing installer set	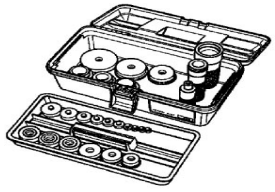
09921–20240 Bearing remover set	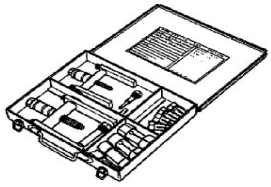	09924–84510 Bearing installer set	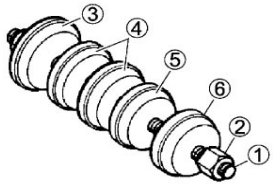
09941–34513 Bearing installer set	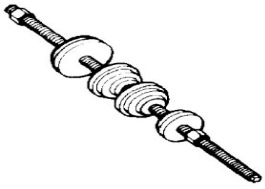	09944–28321 Hexagon bit socket (19 mm : 1/2 sq.)	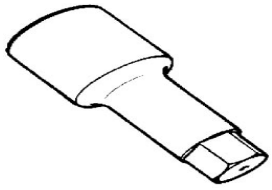

Drive Chain and Sprocket Symptom Diagnosis

Condition	Possible Cause	Action
Noisy Drive Chain	Worn sprocket.	*Replace.* ☞ ☞
	Worn drive chain.	*Replace.* ☞
	Stretched drive chain.	*Replace.* ☞
	Too large drive chain slack.	*Adjust.* ☞
	Drive chain out of adjustment.	*Adjust.* ☞

Drive Chain Related Components

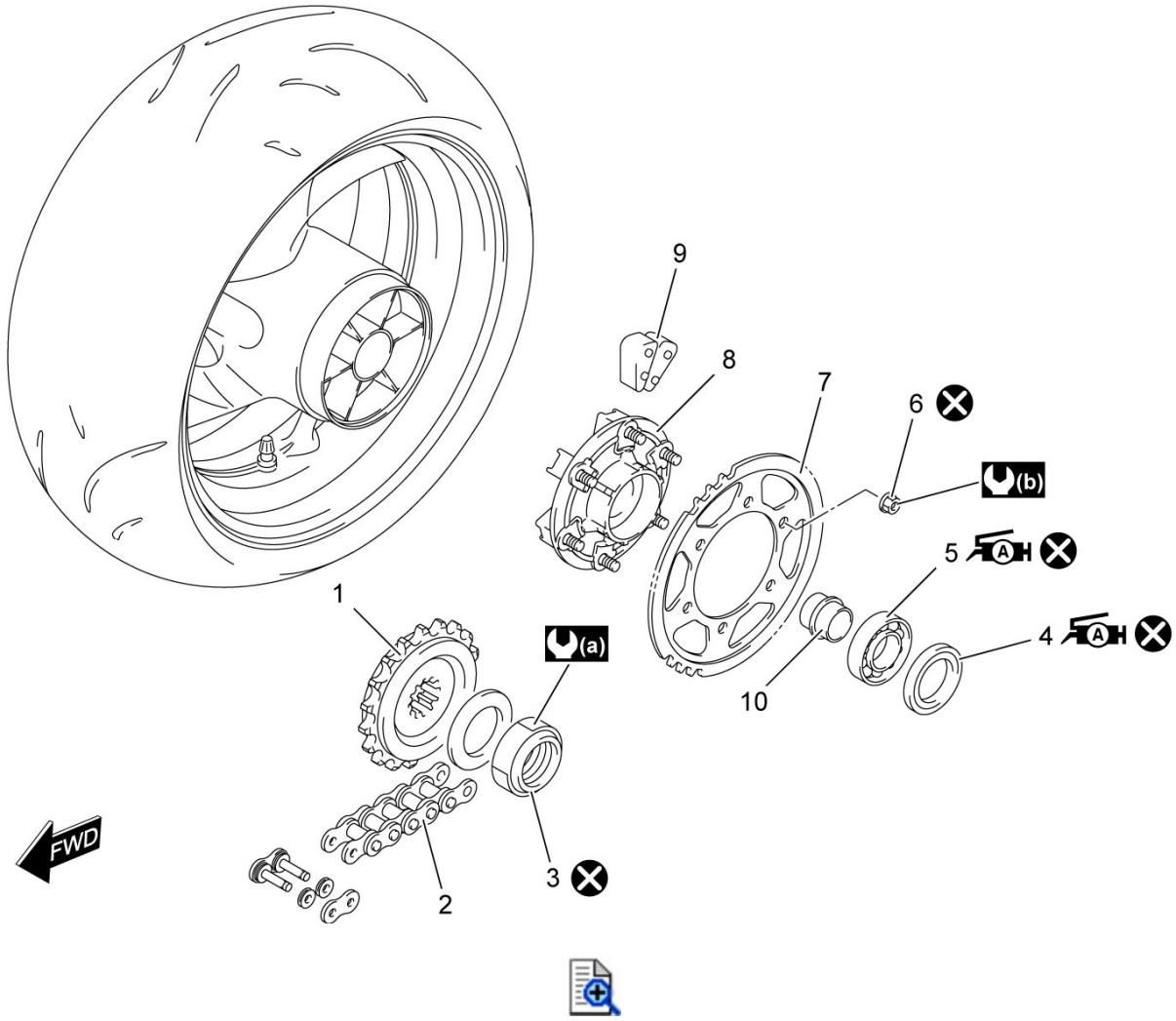

1.	Engine sprocket	6.	Rear sprocket nut	(a):	115 N·m (11.7 kgf-m, 85.0 lbf-ft)
2.	Drive chain	7.	Rear sprocket	(b):	60 N·m (6.1 kgf-m, 44.5 lbf-ft)
3.	Engine sprocket nut	8.	Rear sprocket mounting drum	A:	Apply grease.
4.	Dust seal	9.	Wheel damper	:	Do not reuse.
5.	Bearing	10.	Retainer		

Drive Chain Cleaning and Lubricating

1) Place the motorcycle on the side-stand.
2) Remove dirt and dust from the drive chain (1). Be careful not to damage the seal ring.
3) Clean the drive chain (1) with a sealed drive chain cleaner, or water and neutral detergent.

NOTICE:
Cleaning the drive chain improperly can damage seal rings and ruin the drive chain.
- **Do not use a volatile solvent such as paint thinner, kerosene and gasoline.**
- **Do not use high pressure cleaner to clean the drive chain.**
- **Do not use wire brush to clean the drive chain.**

4) Use a soft brush to clean the drive chain (1). Be careful not to damage the seal ring even through using a soft brush.
5) Wipe off water and neutral detergent.
6) Lubricate with a motorcycle sealed drive chain (1) lubricant or high viscosity oil.

NOTICE:
Some drive chain lubricant contains solvents and additives which could damage the seal rings in the drive chain.
Use sealed drive chain lubricant which is specifically intended for use with sealed drive chains.

7) Lubricate both front and back plates of the drive chain (1).
8) Wipe off excess lubricant after lubricating all around of the drive chain (1).

NOTE:
The standard drive chain is a RK 525GSH. SUZUKI recommends to use this standard drive chain as a replacement.

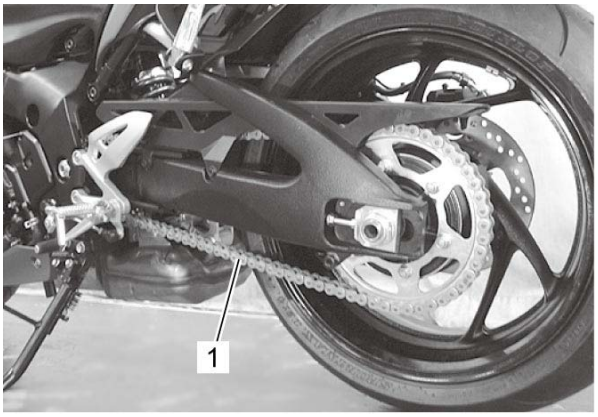

Drive Chain Inspection and Adjustment

Drive Chain Visual Check

1) With the transmission in neutral, support the motorcycle with a jack and turn the rear wheel slowly by hand.

2) Visually check the drive chain for the possible defects listed as follows. If any defects are found, the drive chain must be replaced. ☞

NOTE:
When replacing the drive chain, replace the drive chain and sprockets as a set.

- Loose pins
- Damaged rollers
- Dry or rusted links
- Kinked or binding links
- Excessive wear
- Improper chain adjustment
- Missing O-ring seals

Drive Chain Length Inspection

1) Place the motorcycle on the side-stand.

2) Loosen the rear axle nut (1).

3) Loosen the left and right chain adjuster lock-nuts (2).

4) Give tension to the drive chain fully by turning both chain adjuster bolts (3).

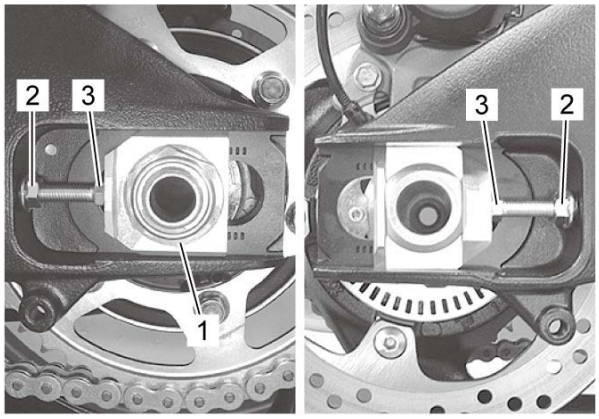

5) Count out 21 pins (20 pitches) on the chain and measure the distance between the two points. If the distance exceeds the service limit, the chain must be replaced. ☞

Drive chain 20-pitch length
[Limit]: 319.4 mm (12.57 in)

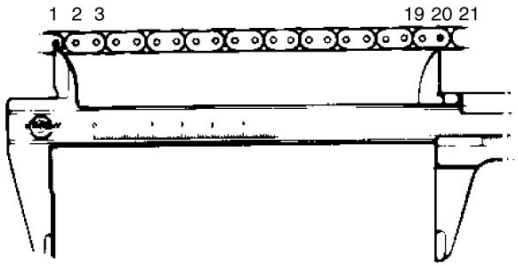

6) After finishing the drive chain length inspection, adjust the drive chain slack.

Drive Chain Slack Adjustment

1) Place the motorcycle on the side-stand.

2) Loosen the rear axle nut (1).

3) Loosen the left and right chain adjuster lock-nuts (2).

4) Loosen or tighten both chain adjuster bolts (3) until there is 20 – 30 mm (0.79 – 1.18 in) “a” of slack at the middle of the chain between the engine and rear sprockets.

NOTICE:
The reference marks (4) on both sides of the swingarm and the edge of each chain adjuster must be aligned to ensure that the front and rear wheels are correctly aligned.

Drive chain slack “a”

On side-stand
[Standard]: 20 – 30 mm (0.79 – 1.18 in)

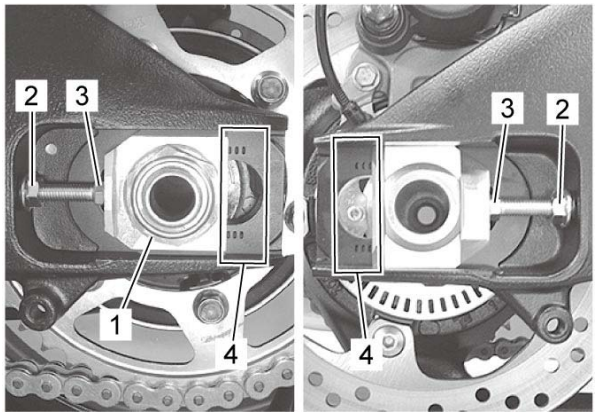

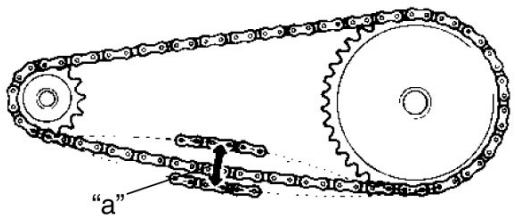

5) After adjusting the drive chain, tighten the rear axle nut to the specified torque.

Tightening torque

Rear axle nut: 100 N·m (10.2 kgf-m, 74.0 lbf-ft)

6) Recheck the drive chain slack after tightening the axle nut.

7) Tighten both chain adjuster lock-nuts to the specified torque.

Tightening torque

Chain adjuster lock-nut: 22 N·m (2.2 kgf-m, 16.5 lbf-ft)

Drive Chain Replacement

Use the special tool in the following procedure, to cut and rejoin the drive chain.

NOTE:
When using the special tool, apply a small quantity of grease to the threaded parts of the special tool.

Special Tool
09922–22712

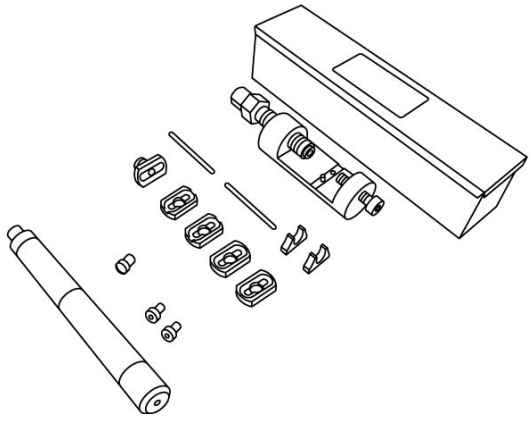

Drive Chain Cutting

1) Set up the special tool.

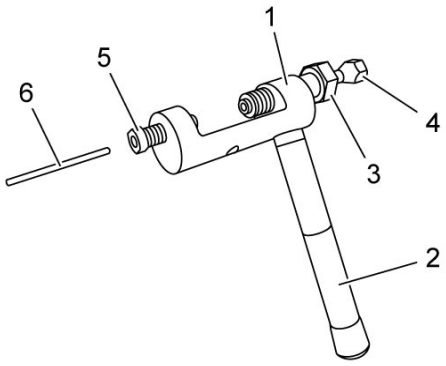

1.	Tool body	4.	Pressure bolt B
2.	Grip handle	5.	Adjuster bolt
3.	Pressure bolt A	6.	Cutting pin

2) Select the correct guide plate (1) from table below, and mount it to the tool body.

Drive chain size	Guide plate
520, 525, 530 (50)	500
532	532

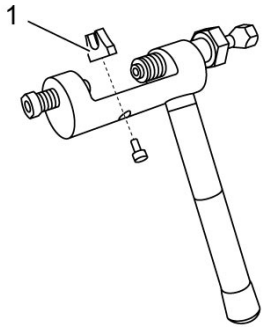

3) The tip of cutting pin (1) should be positioned inside “a” approximately 5 mm (0.2 in) from the end face of pressure bolt A (2).

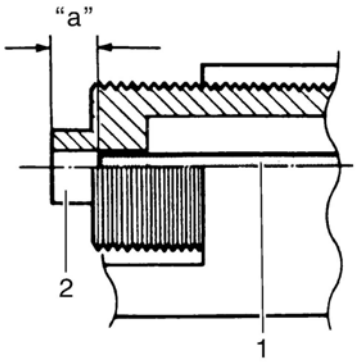

4) Place the drive chain link being disjointed on the guide plate (1) of the tool.

5) Turn in both the adjuster bolt (2) and pressure bolt A (3) so that each of their end hole fits over the chain joint pin properly.

6) Tighten the pressure bolt A (3) with the bar.

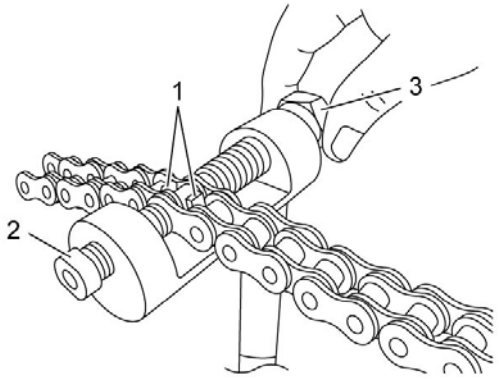

7) Turn in the pressure bolt B (1) with the wrench (2) and force out the drive chain joint pin (3).

NOTE:
Continue turning in the pressure bolt B (1) until the joint pin should been completely pushed out of the chain.

8) After the joint pin (3) is removed, loosen the pressure bolt B (1) and then pressure bolt A (4).

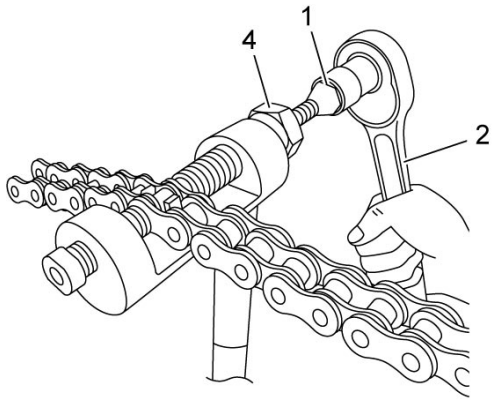

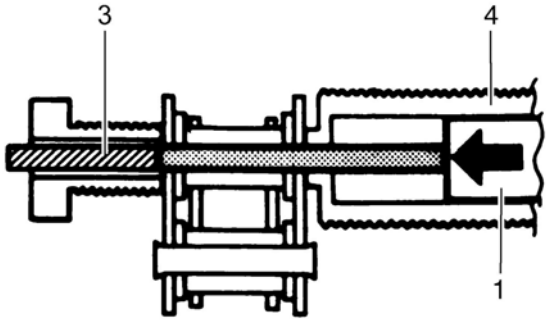

Drive Chain Connecting

⚠WARNING:
Do not use joint clip type of drive chain. The joint clip may have a chance to drop which may cause severe damage to motorcycle and severe injury.

Joint plate installation

1) Set up the special tool.

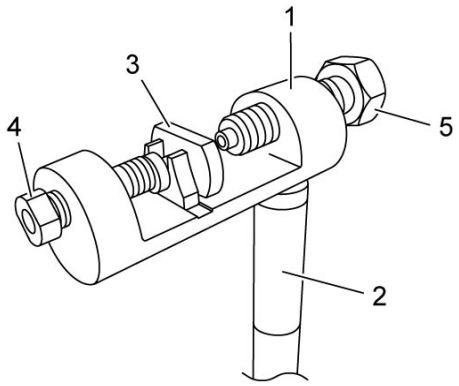

1.	Tool body	4.	Adjuster bolt
2.	Grip handle	5.	Pressure bolt A
3.	Wedge holder		

2) Select the correct pressure holder (1) from table below, and set it to pressure bolt A (2).

Drive chain size / Type	Pressure holder
530 (50), 532 / Riveting type	F-50
520, 525 / Riveting type	F-520
530 (50), 532 / Clip type	C-50
520, 525 / Clip type	C-520

NOTE:
In case joint plate is too large to fit on "520 pressure holder". Please select "50 pressure holder".

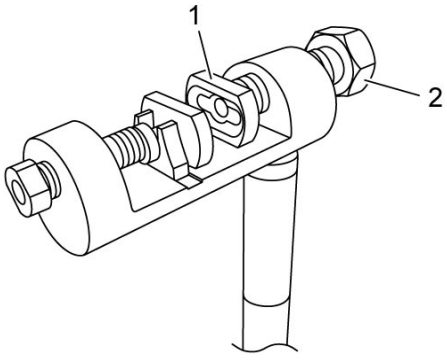

3) Connect both ends of the drive chain with the joint pins (1) inserted from the wheel side [a] as installed on the motorcycle.

Joint set part number
[Option]: 27620 – 33E50

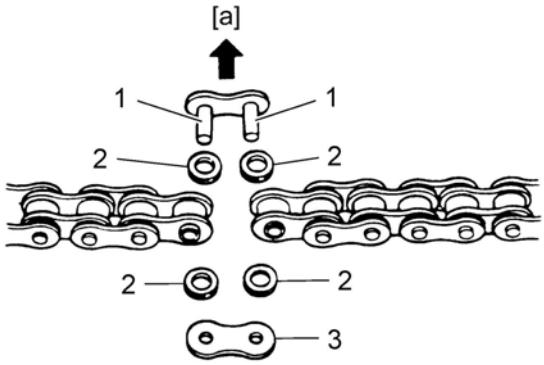

2.	O-ring	3.	Joint plate

4) Apply grease on the recessed portion of the pressure holder (1). Then install the joint plate (2) on the tool, its stamp mark must face the pressure holder (1) side.

"A": Grease 99000–25011 (SUZUKI SUPER GREASE A)

5) Set the drive chain on the tool as illustrated and turn in the adjuster bolt (3) to secure the wedge holder and wedge pin (4).

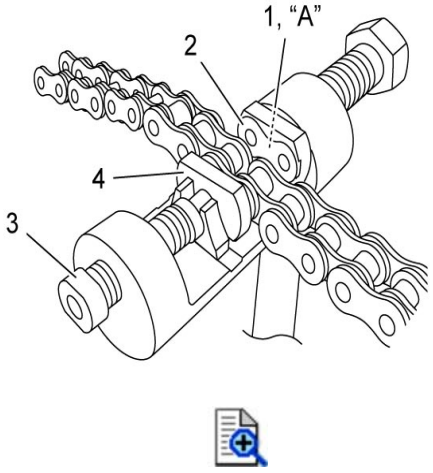

6) Turn in the pressure bolt A (1) and align two joint pins (2) properly with the respective holes of the joint plate (3).

7) Turn in the pressure bolt A (1) further using the wrench (4) to press the joint plate over the joint pins.

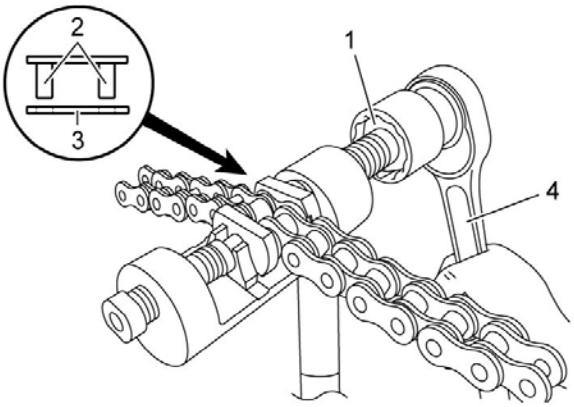

8) Continue pressing the joint plate until the distance between the two joint plates come to the specification.

Joint plate distance specification “a”

[Standard]: 19.45 – 19.75 mm (0.7657 – 0.7775 in)

NOTICE:
If pressing of the joint plate makes the dimension out of specification excessively, the work must be carried out again by using new joint parts.

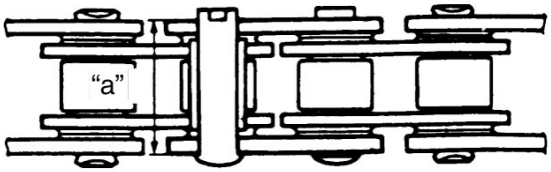

Joint pin staking

1) Set up the special tool.

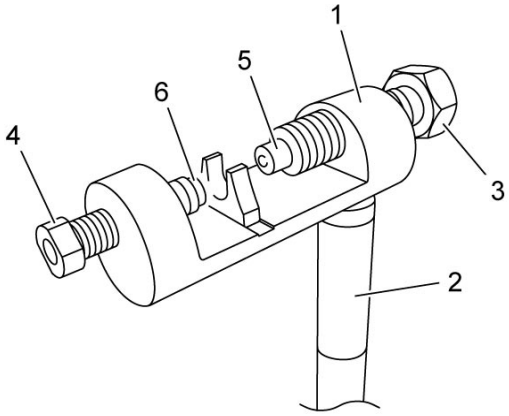

1.	Tool body	4.	Adjuster bolt
2.	Grip handle	5.	Flare pin
3.	Pressure bolt A	6.	Back-up pin

2) Apply grease to the flare pin (1).

"A": Grease 99000–25011 (SUZUKI SUPER GREASE A)

3) Stake the joint pin by turning (approximately 7/8 turn) the pressure bolt A (2) with the bar until the pin end diameter becomes the specified dimension.

4) After joining of the chain has been completed, check to make sure that the link is smooth and no abnormal condition is found.

NOTE:
Should any abnormal condition be found, reassemble the chain link using the new joint parts.

Pin end diameter specification "a"

[Standard]: 5.45 – 5.55 mm (0.215 – 0.218 in)

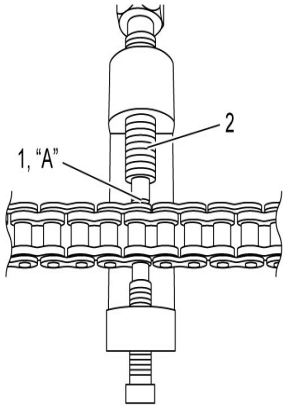

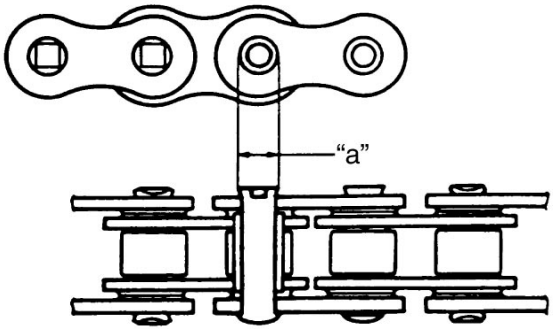

5) Adjust the drive chain slack, after connecting it. Refer to ***Drive Chain Inspection and Adjustment***.

Engine Sprocket Removal and Installation

Reference: Drive Chain Related Components

Removal

1) Remove the gearshift link arm (1).

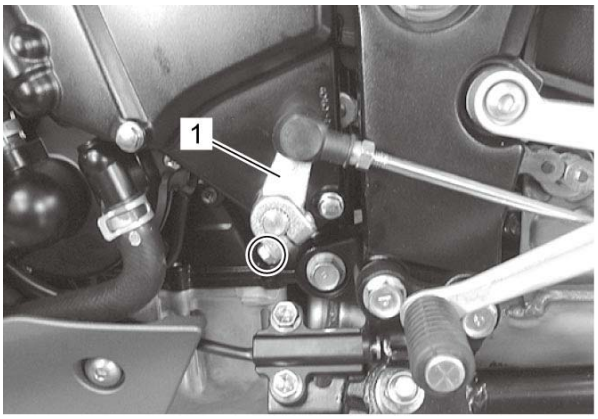

2) Move the engine sprocket cover (1) with the clutch release arm (2).

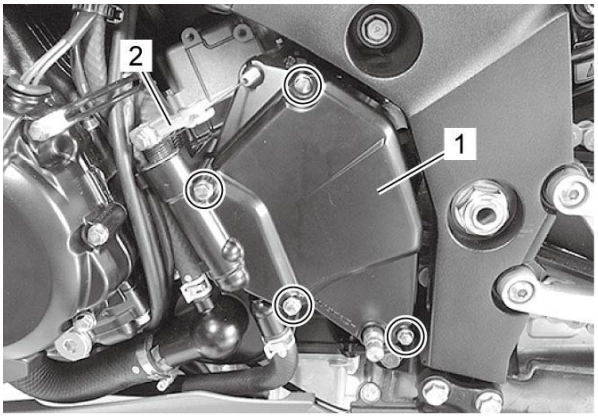

3) Remove the engine sprocket nut (1) while depressing the rear brake pedal.

4) Remove the washer (2).

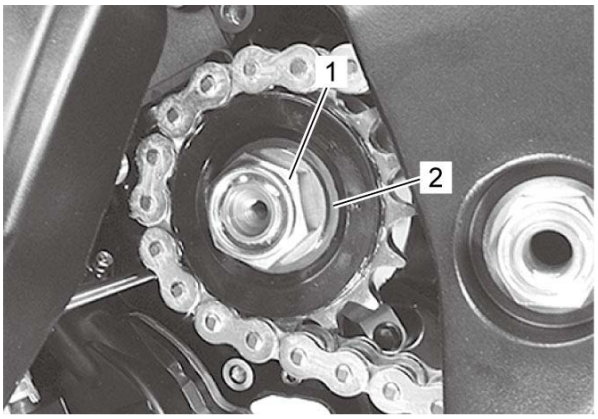

5) Loosen the rear axle nut (1).

6) Support the motorcycle with a jack or wooden block.

7) Loosen the left and right lock-nuts (2) and turn in the adjuster bolts (3) to provide additional chain slack.

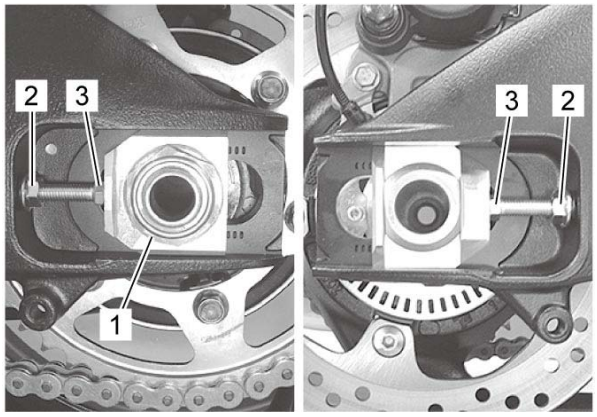

8) Remove the engine sprocket (1).

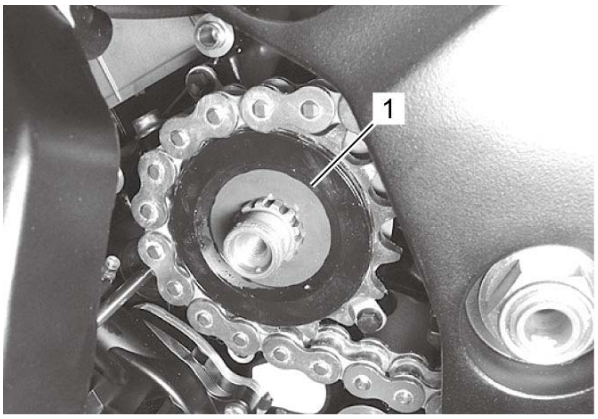

Installation

Reference: Rear Sprocket Mounting Drum / Sprocket Inspection

1) Install the engine sprocket (1) and washer (2).

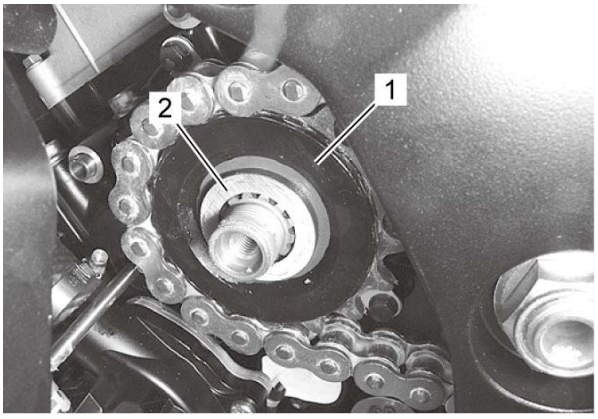

2) Tighten the new engine sprocket nut (1) to the specified torque.

Tightening torque

Engine sprocket nut (a): 115 N·m (11.7 kgf-m, 85.0 lbf-ft)

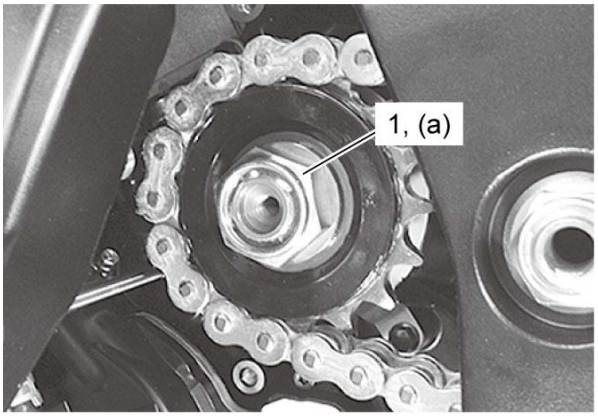

3) Install the engine sprocket cover.

4) Install the gearshift link arm (1) to the gearshift shaft.

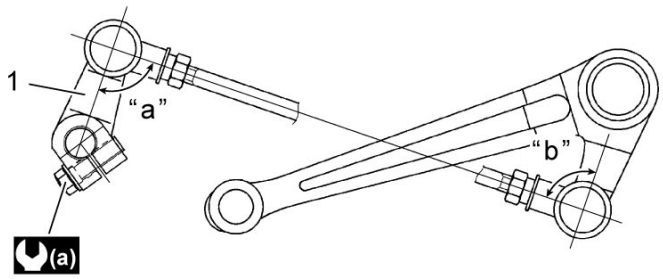

“a”:	90°	(a):	10 N·m (1.0 kgf-m, 7.5 lbf-ft)
“b”:	87.5°		

5) Check the gearshift lever height. ☞

6) Adjust the drive chain slack. Refer to ***Drive Chain Inspection and Adjustment***.

Rear Sprocket Mounting Drum / Sprocket Inspection

Refer to ***Rear Wheel Assembly Removal and Installation***.

Dust Seal

Inspect the sprocket mounting drum dust seal lip (1) for wear or damage. If any damage is found, replace the dust seal with a new one. ☞

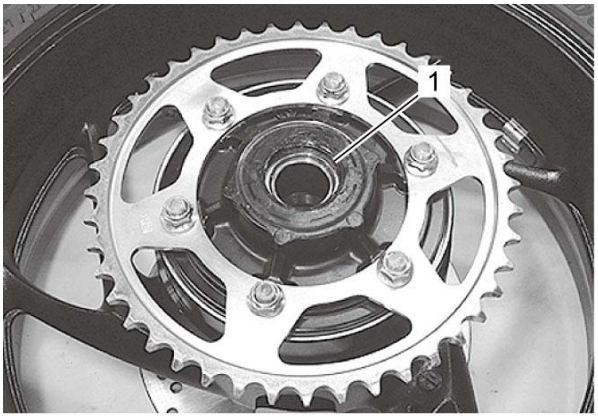

Bearing

Inspect the play of the sprocket mounting drum bearing by hand while they are in the drum. Rotate the inner race by hand to inspect for abnormal noise and smooth rotation. Replace the bearing if there is anything unusual. ☞

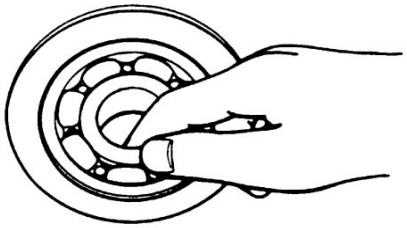

Sprocket

1) Remove the engine sprocket cover. (Engine sprocket only) ☞

2) Inspect the sprocket teeth for wear. If they are worn as shown, replace the engine sprocket, rear sprocket and drive chain as a set.

- Engine: ☞
- Rear: ☞
- Drive chain: ☞

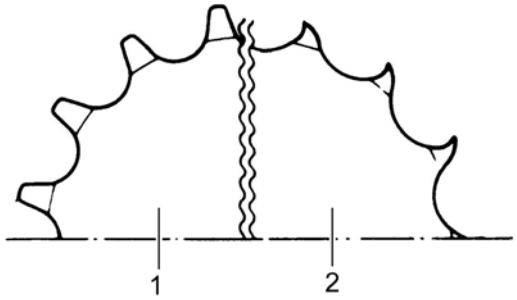

1.	Normal wear	2.	Excessive wear

3) Install the engine sprocket cover. (Engine sprocket only) ☞

Wheel Damper

Refer to ***Rear Wheel Damper Inspection***.

Drive Chain

Refer to ***Drive Chain Inspection and Adjustment***.

Rear Sprocket Mounting Drum Assembly Removal and Installation

Refer to ***Rear Wheel Assembly Removal and Installation***.
Reference: Drive Chain Related Components

Removal

1) Remove the rear sprocket mounting drum assembly (1).

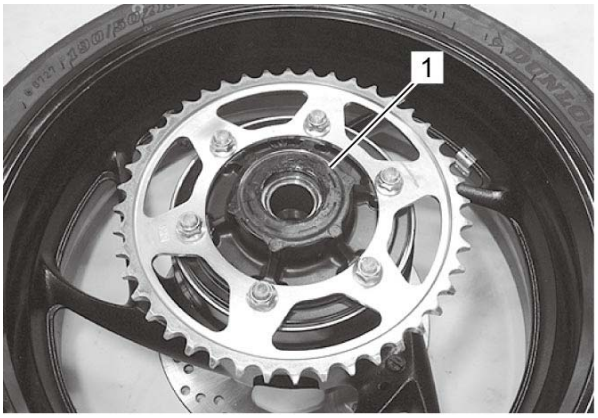

2) Remove the retainer (1).

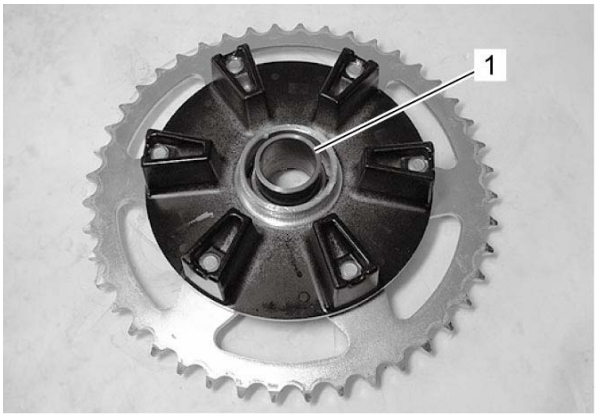

Installation

Reference: Rear Sprocket Mounting Drum / Sprocket Inspection
Install the rear sprocket mounting drum assembly in the reverse order of removal. Pay attention to the following point:

- Apply grease to the contacting surface between the rear wheel hub and rear sprocket mounting drum.

  "A": Grease 99000–25011 (SUZUKI SUPER GREASE A)

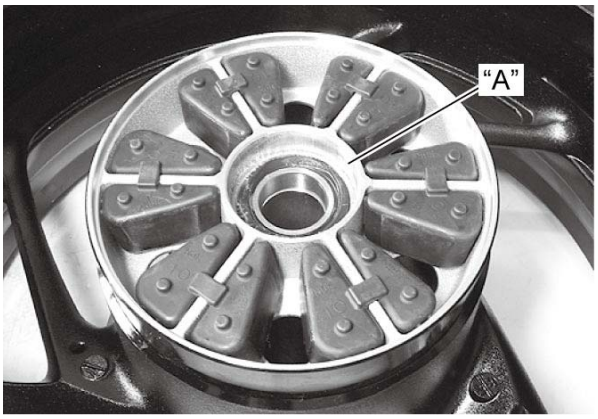
"A"

Rear Sprocket Mounting Drum Dust Seal / Bearing Removal and Installation

Refer to ***Rear Sprocket Mounting Drum Assembly Removal and Installation***.

Removal

1) Remove the dust seal (1) using the special tool.

Special Tool

(A): 09913–50121

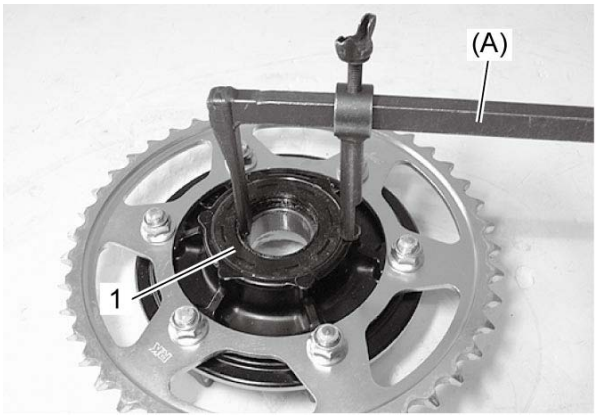

2) Remove the bearing (1) with the special tool.

Special Tool

(A): 09921–20240

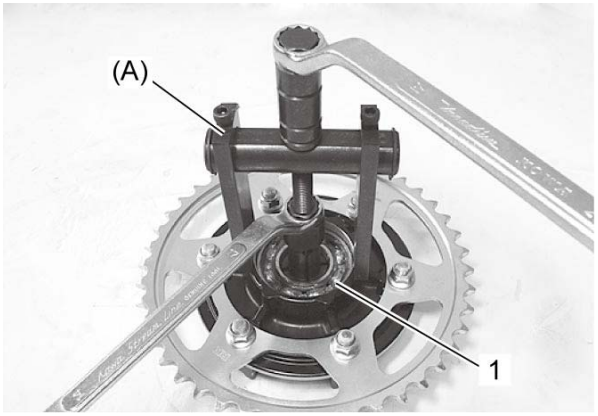

Installation

1) Apply grease to the new bearing.

Grease 99000–25011 (SUZUKI SUPER GREASE A)

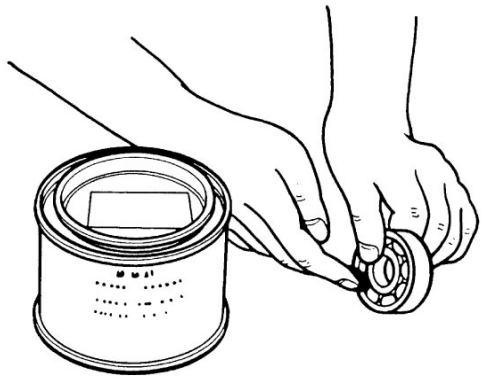

2) Install the bearing (1) with the special tool.

NOTICE:
The sealed cover of the bearing must face inside.

Special Tool
(A): 09924–84510

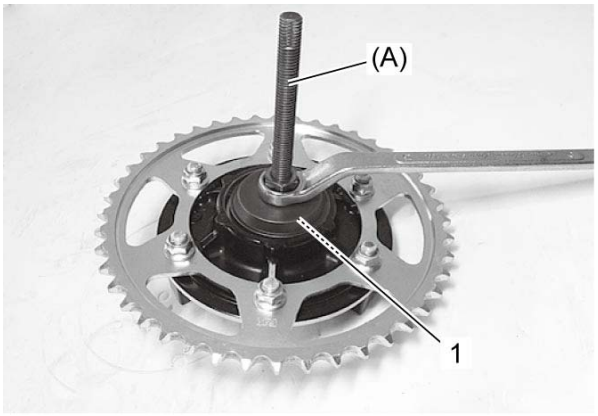

3) Install a new dust seal (1) with the special tool.

Special Tool
(A): 09913–70210

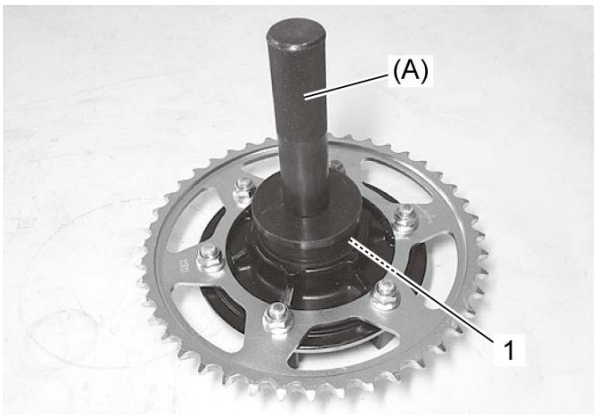

4) Apply grease to the dust seal lip.

"A": Grease 99000–25011 (SUZUKI SUPER GREASE A)



Rear Sprocket Removal and Installation

Refer to ***Rear Wheel Assembly Removal and Installation***.
Reference: Drive Chain Related Components

Removal

1) Remove the rear sprocket (1).

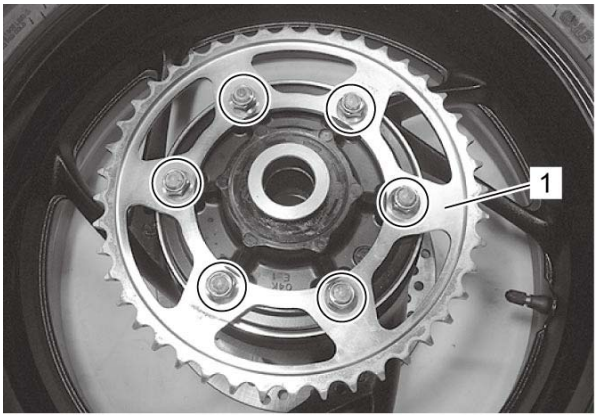

Installation

Reference: Rear Sprocket Mounting Drum / Sprocket Inspection

Install the rear sprocket in the reverse order of removal. Pay attention to the following point:

- Tighten the new rear sprocket nuts (1) to the specified torque.

NOTE:
The stamped mark (2) on the sprocket should face outside.

Tightening torque

Rear sprocket nut (a): 60 N·m (6.1 kgf-m, 44.5 lbf-ft)

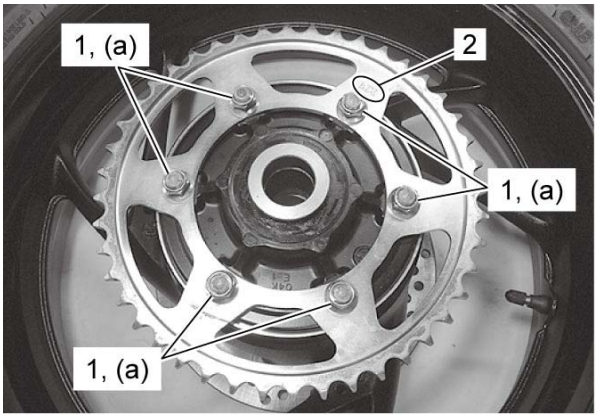

Tightening Torque Specifications

Fastening part	Tightening torque			Note
	N·m	kgf-m	lbf-ft	
Rear axle nut	100	10.2	74.0	☞
Chain adjuster lock-nut	22	2.2	16.5	☞
Engine sprocket nut	115	11.7	85.0	☞
Rear sprocket nut	60	6.1	44.5	☞

Reference:
For the tightening torques of fasteners not specified in this page, refer to:
Drive Chain Related Components
Engine Sprocket Removal and Installation
Fasteners Information

Recommended Service Material

Material	SUZUKI recommended product or Specification		Note
Grease	SUZUKI SUPER GREASE A	P/No.: 99000–25011	☞ ☞ ☞ ☞ ☞

NOTE:
Required service material(s) is also described in:
Drive Chain Related Components

Special Tool

09913–50121 Oil seal remover ☞	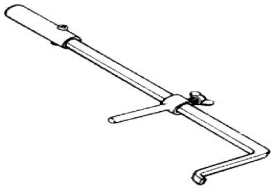	09913–70210 Bearing installer set ☞	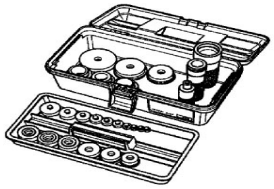
09921–20240 Bearing remover set ☞	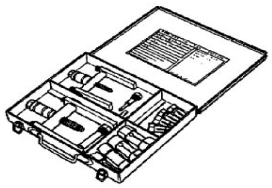	09922–22712 Drive chain cut / rivet tool set ☞	
09924–84510 Bearing installer set ☞	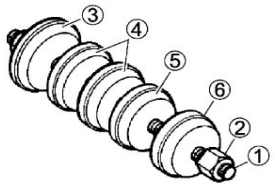		

Steering Symptom Diagnosis

Condition	Possible Cause	Action
Heavy steering	Over tightened steering stem adjust-nut.	*Adjust.* ☞
	Broken bearing in steering stem.	*Replace.* ☞
	Distorted steering stem.	*Replace.* ☞
	Not enough pressure in tires.	*Adjust.* ☞
Wobbly handlebar	Loss of balance between right and left front forks.	*Replace fork, adjust fork oil level or replace fork spring.* ☞ ☞
	Distorted front fork.	*Repair or replace.* ☞
	Distorted front axle or crooked tire.	*Replace.* ☞ ☞
	Loose steering stem adjust-nut.	*Adjust.* ☞
	Worn or incorrect tire.	*Replace.* ☞
	Incorrect tire pressure.	*Adjust.* ☞
	Worn bearing/race in steering stem.	*Replace.* ☞

Handlebar Components

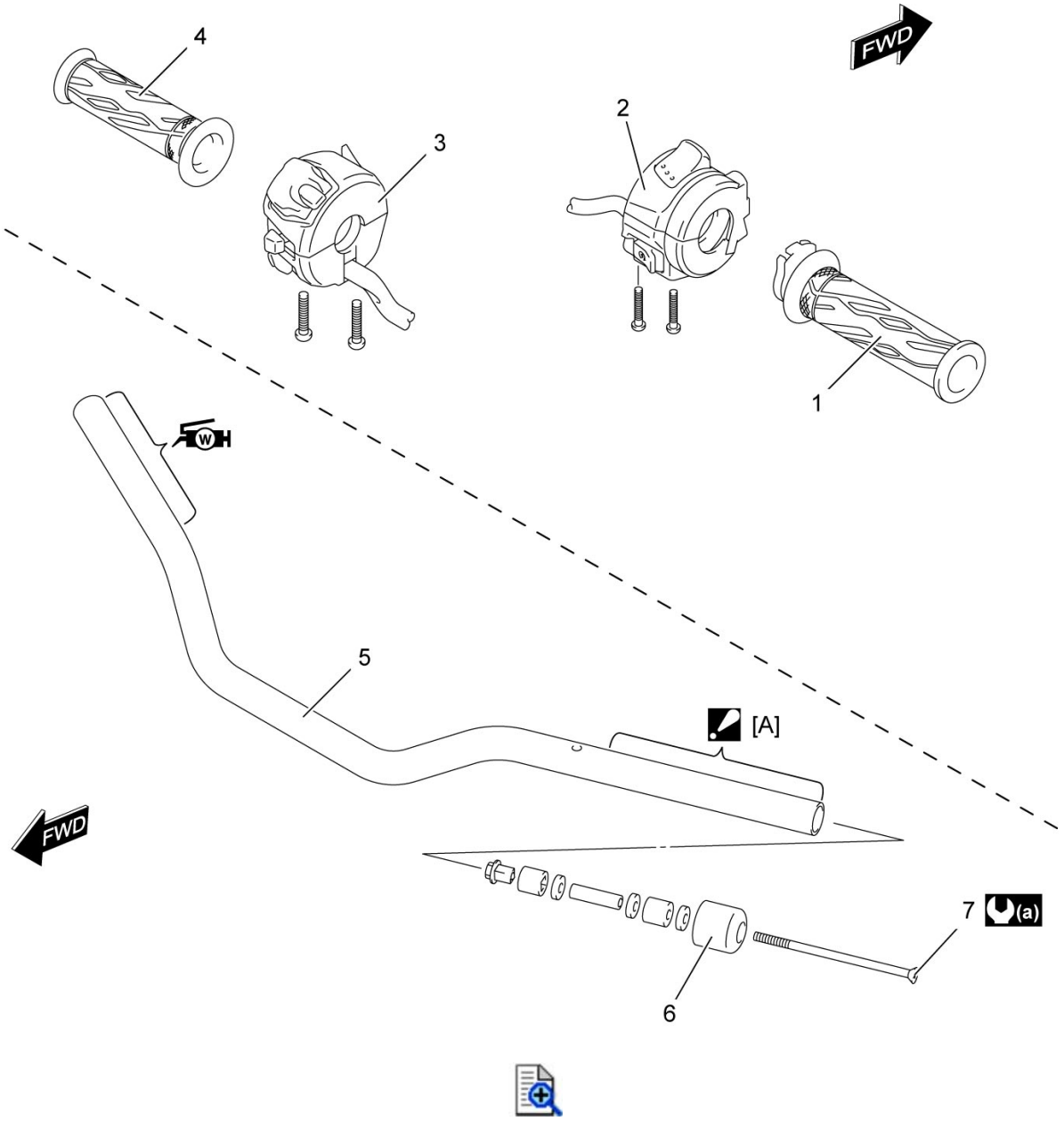

[A]:	Apply handle grip glue.	4.	Left handlebar grip	:	5.5 N·m (0.56 kgf-m, 4.05 lbf-ft)
1.	Throttle grip	5.	Handlebars	:	Apply grease.
2.	Right handle switch	6.	Handlebar balancer		
3.	Left handle switch	7.	Handlebar balancer screw		

Handlebar Construction

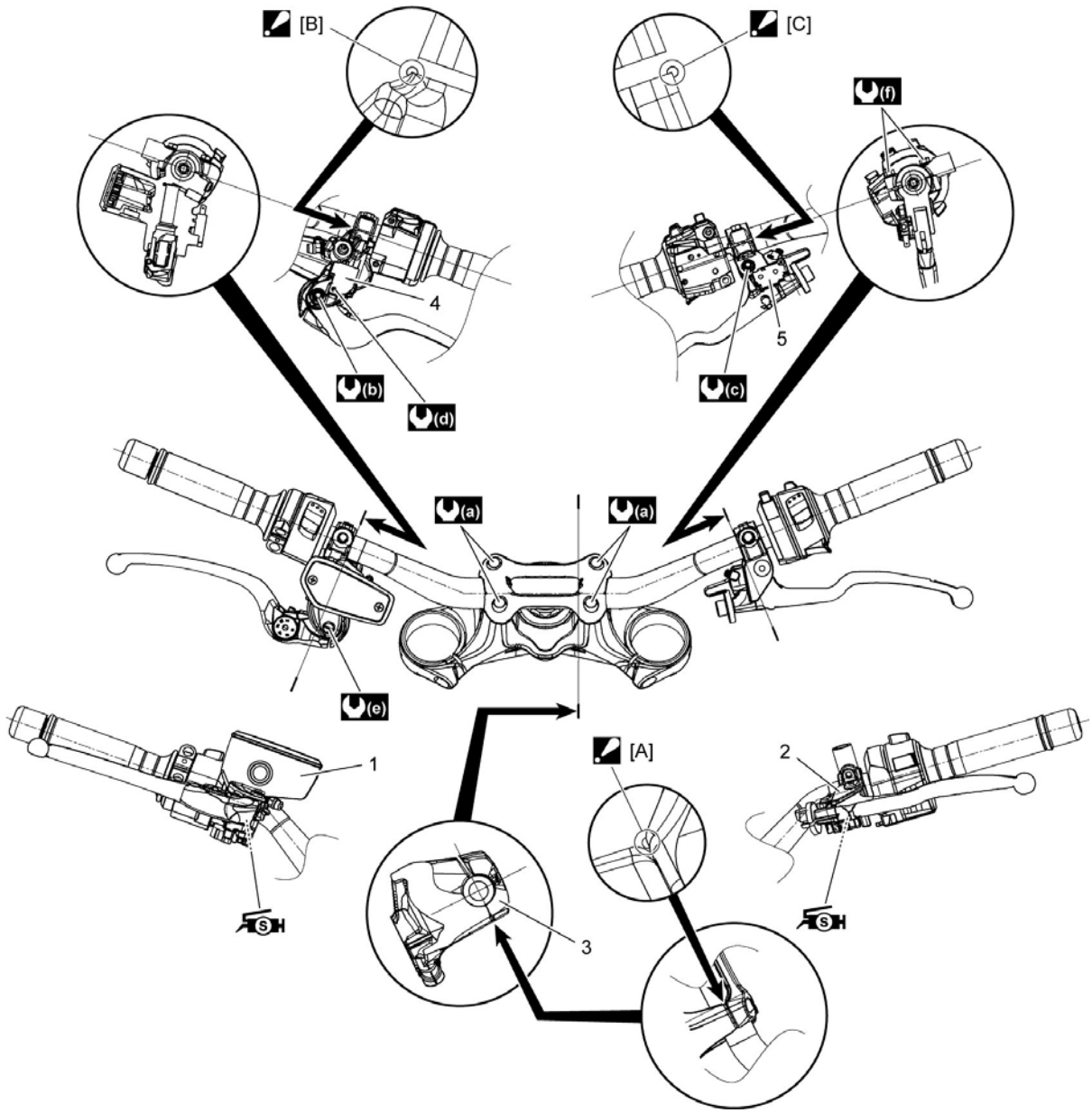

[A]:	Align the matching surface of handlebar holder with punch mark of handlebars.	2.	Clutch lever	(a):	23 N·m (2.3 kgf-m, 17.0 lbf-ft)	(e):	1 N·m (0.10 kgf-m, 0.75 lbf-ft)
[B]:	Align the punch mark of handlebars with the edge of master cylinder.	3.	Handlebar holder	(b):	6 N·m (0.61 kgf-m, 4.45 lbf-ft)	(f):	10 N·m (1.0 kgf-m, 7.5 lbf-ft)
[C]:	Align the punch mark of handlebars with the edge of clutch lever holder.	4.	Brake light switch	(c):	6.5 N·m (0.66 kgf-m, 4.80 lbf-ft)	(S):	Apply silicone grease.

1.	Front brake master cylinder	5.	Clutch lever position switch	(d)	1.2 N·m (0.12 kgf-m, 0.90 lbf-ft)		

Handlebar Inspection

Refer to ***Handlebar Removal and Installation***.
Inspect the handlebars for distortion and damage.
If any defect is found, replace the handlebars with a new one.

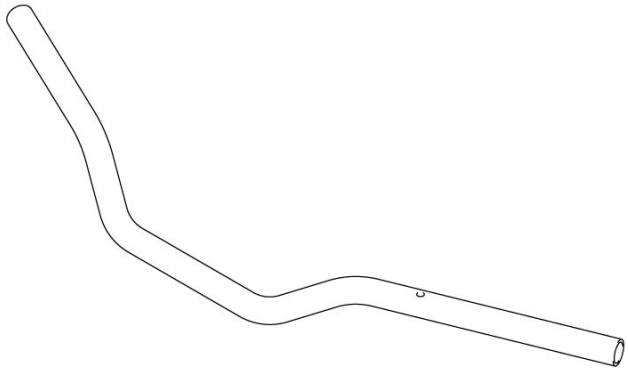

Handlebar Removal and Installation

Reference: Handlebar Components
Reference: Handlebar Construction

Removal

NOTE:
Do not turn the master cylinder upside down.

1) Remove the following parts from the left side of the handlebar.
a) Rear view mirror (1)
b) Clutch lever assembly (2)
c) Left handle switch (3)
d) Handlebar balancer (4)
e) Left handlebar grip (5)

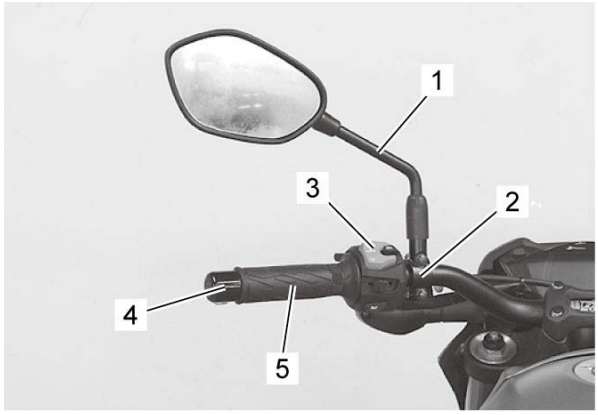

2) Remove the following parts from the right side of the handlebar.
a) Rear view mirror (1)
b) Front brake master cylinder assembly (2)
c) Right handle switch (3)
d) Handlebar balancer (4)
e) Throttle grip (5)

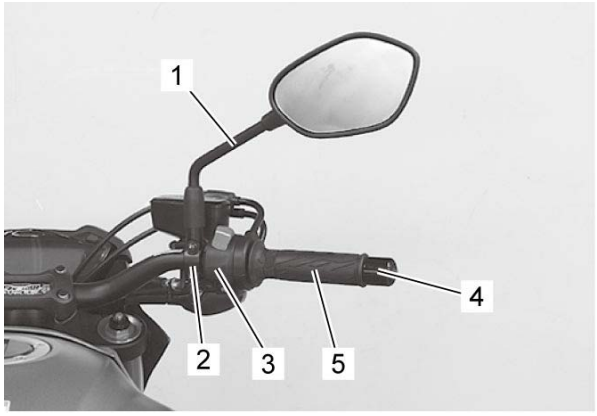

3) Remove the caps (1), bolts (2) and handlebar holder (3).

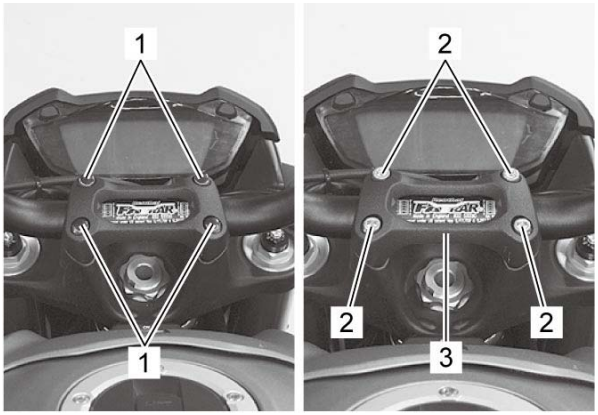

4) Remove the handlebars.

Installation

Reference: Handlebar Inspection

1) Install the handlebars.

2) Install the handlebar holder positioning the punch mark (1) frontward.

3) Set the handlebars so that its punch mark (1) aligns with the mating surface (2) of the left handlebar holder and tighten the front side of the handlebar clamp bolts (3) first.

Tightening torque

Handlebar clamp bolt (a): 23 N·m (2.3 kgf-m, 17.0 lbf-ft)

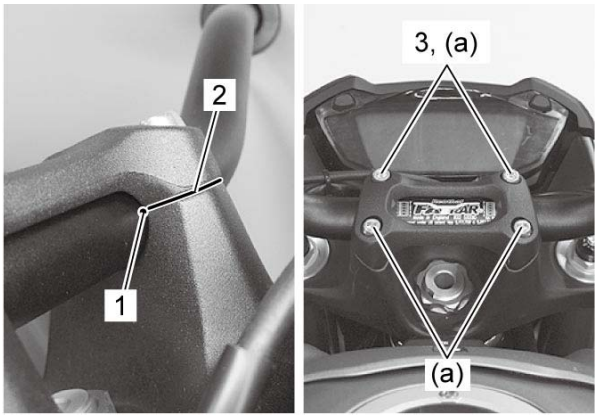

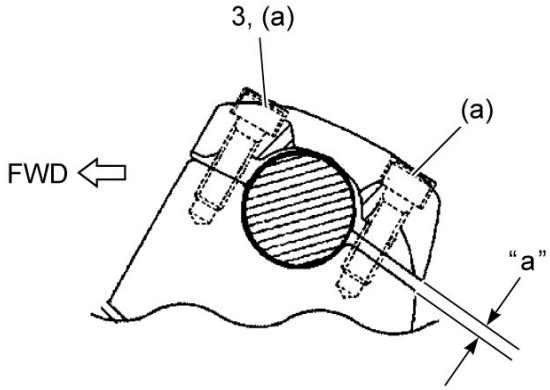

“a”:	Clearance

4) Install the front brake master cylinder assembly. ☞

5) Apply grease onto the handlebars before installing the throttle grip.

“A”: Grease 99000–25350 (SUZUKI WATER RESISTANT GREASE EP2)

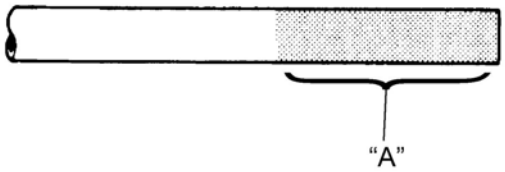

6) Apply grease to the end of the throttle cables and cable pulley.

“A”: Grease 99000–25011 (SUZUKI SUPER GREASE A)

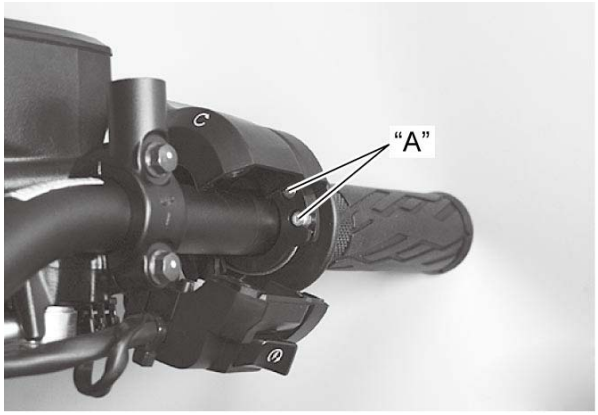

7) Install the right handlebar balancer and tighten the handlebar balancer screw.

Tightening torque

Handlebar balancer screw: 5.5 N·m (0.56 kgf-m, 4.05 lbf-ft)

8) Insert the projection (1) of the right handle switch into the hole (2) of the handlebars.

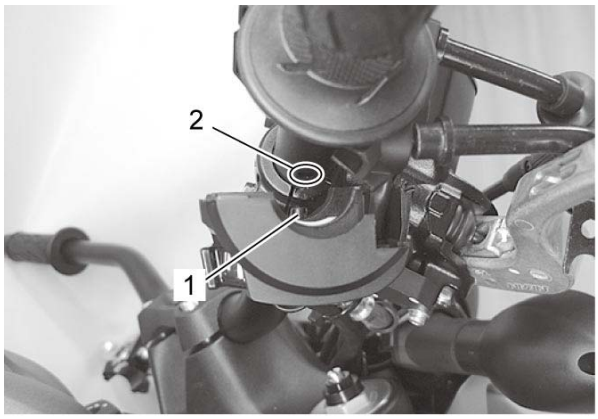

9) Install the right rear view mirror.

10) Clean, decrease and dry both the left handlebar outer surface (1) on which the grip is being fitted and internal surface of the left handlebar grip (2).

11) Apply handle grip glue to both the left handlebar outer surface (1) on which the grip is being fitted and internal surface of the left handlebar grip (2) evenly.

"A": Adhesive (Handle grip glue)

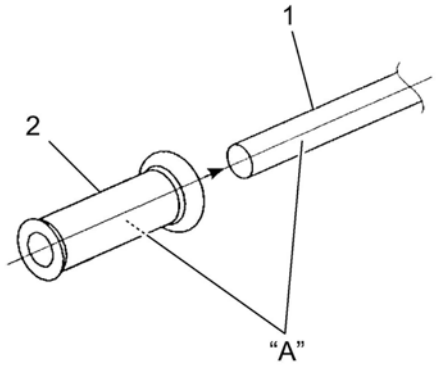

12) Install the left handlebar balancer and tighten the handlebar balancer screw.

Tightening torque

Handlebar balancer screw: 5.5 N·m (0.56 kgf-m, 4.05 lbf-ft)

13) Insert the projection (1) of the left handle switch into the hole (2) of the handlebars.

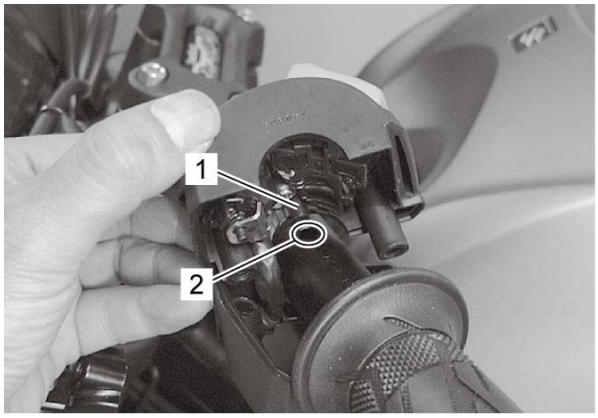

14) Install the clutch lever. ☞

15) Install the left rear view mirror.

16) Check to make sure that the wire harnesses, cables and hoses are properly routed.

- Wire harness: ☞
- Cable: ☞
- Hose: ☞

17) Check the throttle cable for the play and smooth operation. ☞

Steering On-Vehicle Inspection

Steering should be adjusted properly for smooth turning of handlebars and safe running. Overtighten steering prevents smooth turning of the handlebars and too loose steering will cause poor stability.

1) Check that there is no play in the front fork.

a) Support the motorcycle with its front wheel off the ground, grasp the bottoms of the front forks and move the forks back-and-forth to check there is no play in the stem bearings.

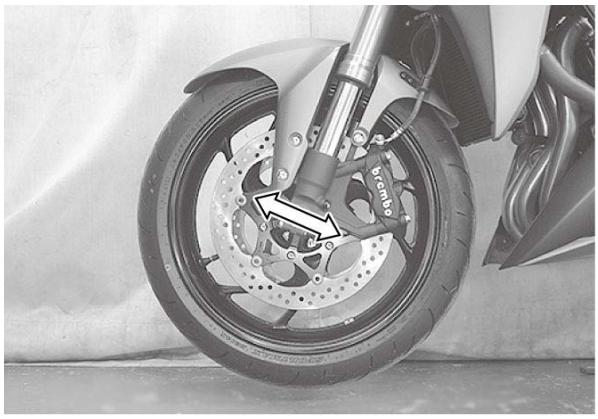

b) With the front wheel on the ground and applying the front brake(s), move the handlebar back-and-forth and up-and-down to check there is no play in the stem bearings.

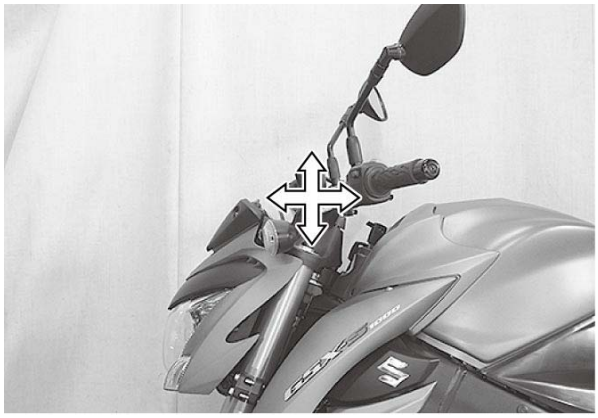

2) If play is found, readjust the steering. ☞

Steering Stem Bearing Removal and Installation

Reference: Steering Stem Components

Removal

1) Remove the steering stem upper bearing (1) and steering stem lower bearing (2). Refer to ***Steering Stem Removal and Installation***.

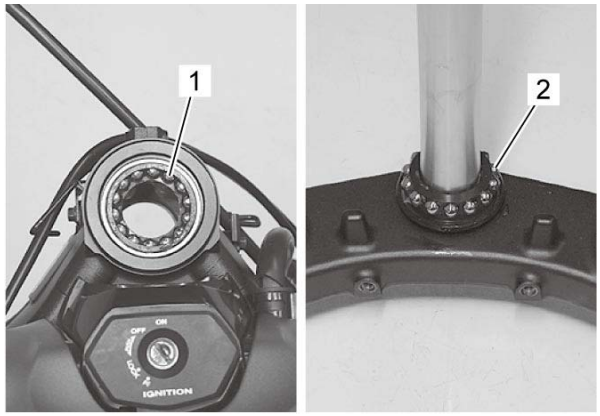

2) Remove the steering stem lower bearing outer race and lower seal with a chisel.

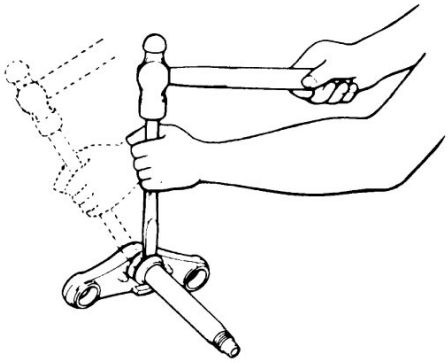

3) Remove the steering stem upper and lower bearing inner races using the special tools.

Special Tool

(A): 09941–54911
(B): 09940–51710

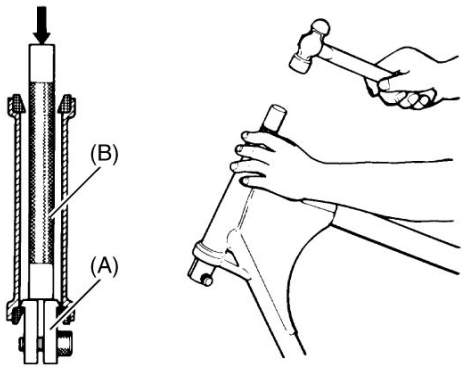

Installation

1) Press in the new upper and lower inner races using the special tools.

Special Tool

(A): 09941–34513
(B): 09913–70210

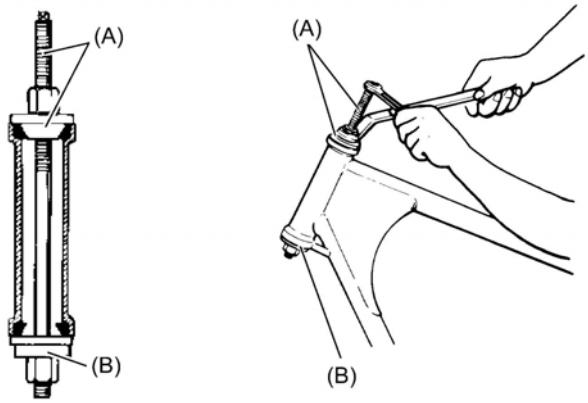

2) Press in the new lower outer race with bearing roller using the special tool.

Special Tool

(A): 09925–18011

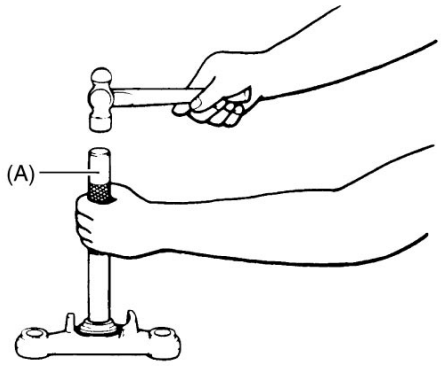

3) Install the steering stem lower bracket to the frame. ☞

Steering Stem Components

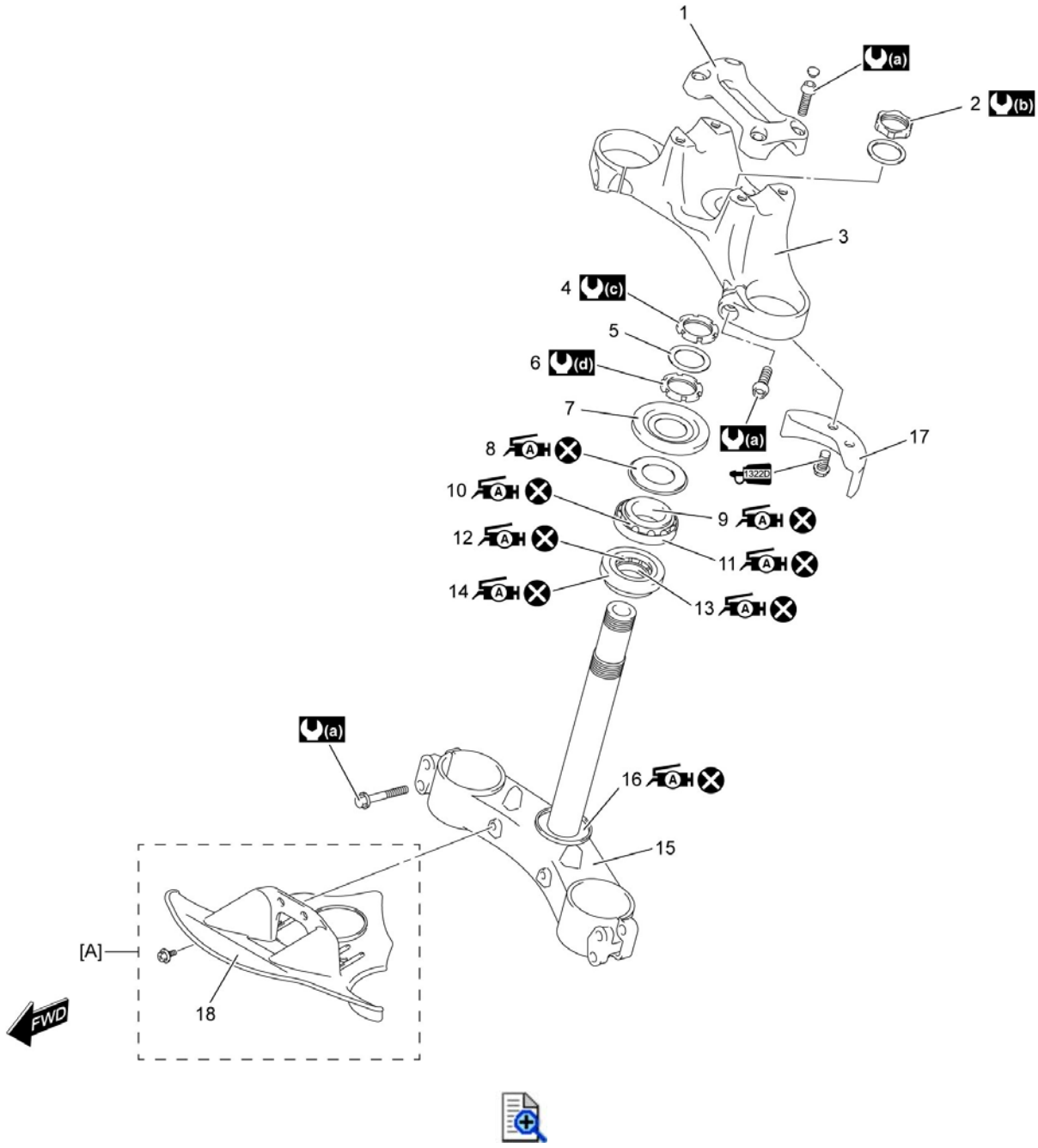

[A]:	GSX-S1000F/FA	9.	Steering stem upper bearing outer race	18.	Lower bracket cover
1.	Handlebar holder	10.	Steering stem upper bearing	(a):	23 N·m (2.3 kgf-m, 17.0 lbf-ft)
2.	Steering stem head nut	11.	Steering stem upper bearing inner race	(b):	90 N·m (9.2 kgf-m, 66.5 lbf-ft)
3.	Steering stem upper bracket	12.	Steering stem lower bearing	(c):	80 N·m (8.2 kgf-m, 59.0 lbf-ft)

4.	Steering stem lock-nut	13.	Steering stem lower bearing outer race	 :	20 N·m (2.0 kgf-m, 15.0 lbf-ft) → turn counterclockwise 0 – 1/4
5.	Washer	14.	Steering stem lower bearing inner race	 :	Apply grease.
6.	Steering stem adjust-nut	15.	Steering stem lower bracket	 :	Apply thread lock to the thread part.
7.	Dust cover	16.	Lower seal	 :	Do not reuse.
8.	Dust seal	17.	Steering lock plate		

Steering Stem Inspection

Refer to ***Steering Stem Removal and Installation***.

Inspect the removed parts for the following abnormalities:

- Distortion of the steering stem
- Bearing wear or damage
- Abnormal bearing noise
- Race wear or damage
- Bearing lower seal damage
- Dust seal wear or damage

If any abnormal points are found, replace defective parts with new ones.



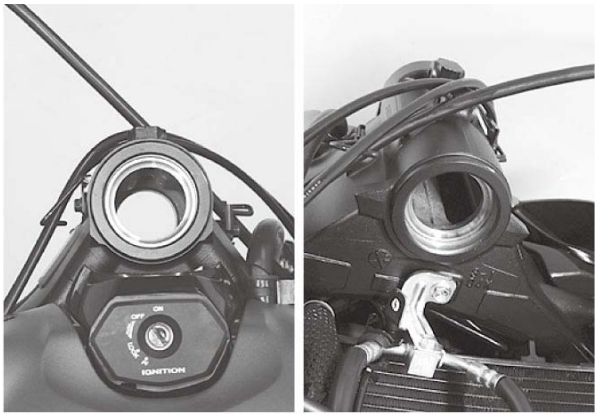

Steering Stem Removal and Installation

Reference: Steering Stem Components

Removal

1) Remove the steering stem upper bracket. ☞

2) Remove the front forks. ☞

3) Remove the lower bracket cover (1) (GSX-S1000F/FA).

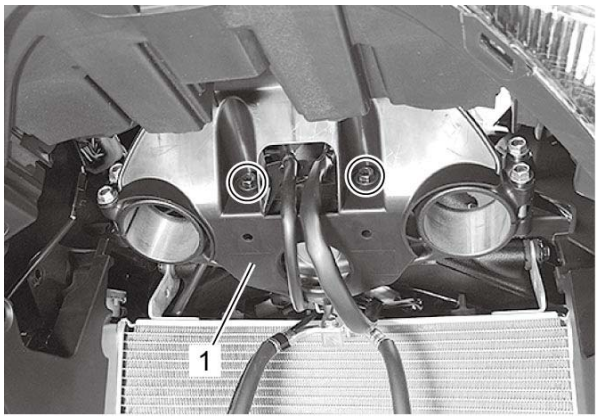

4) While holding the steering stem lower bracket, remove the steering stem lock-nut (1), washer (2) and steering stem adjust-nut (3) with the special tools.

Special Tool

(A): 09940–14911
(B): 09940–14960

5) Remove the steering stem lower bracket.

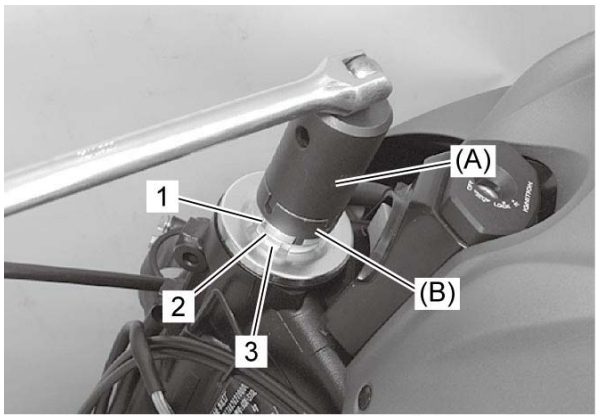

6) Remove the dust cover (1), dust seal (2), steering stem upper bearing outer race (3) and steering stem upper bearing (4).

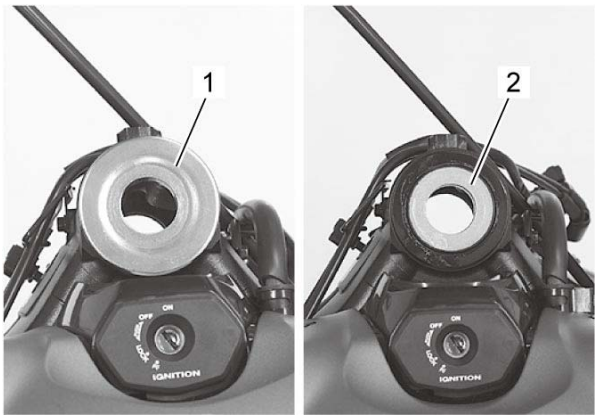

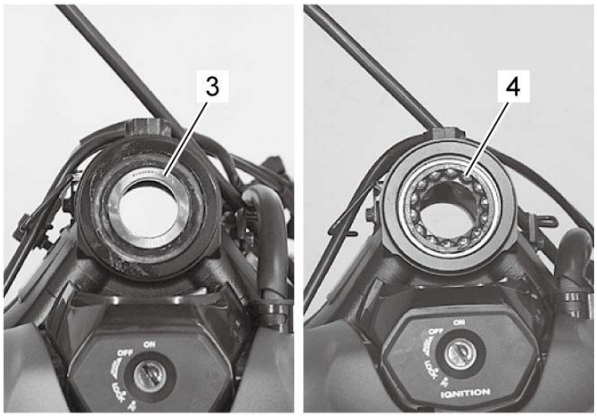

7) Remove the steering stem lower bearing (1).

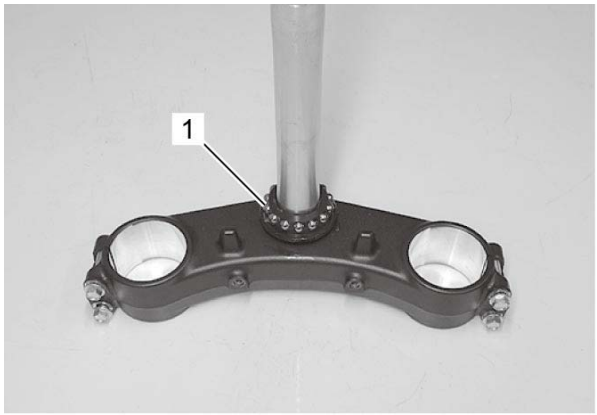

Installation

Reference: Steering Stem Inspection

1) Apply grease to the bearings, races, lower seal and new dust seal lip, and install the steering stem

lower bracket to the frame.

"A": Grease 99000–25011 (SUZUKI SUPER GREASE A)

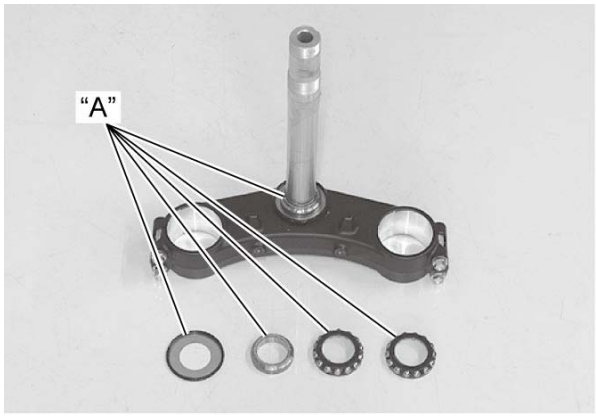

2) Install the steering stem adjust-nut (1) and temporarily tighten it to the specified torque (20 N·m (2.0 kgf-m, 15.0 lbf-ft)) with the special tools.

Special Tool

(A): 09940–14911
(B): 09940–14960

3) Turn the steering stem lower bracket to the left and right about five or six times so that the taper roller bearings seat properly.

4) Loosen the steering stem adjust-nut 0 – 1/4 turn "a".

Tightening torque

Steering stem adjust-nut (a): 20 N·m (2.0 kgf-m, 15.0 lbf-ft) → turn counterclockwise 0 – 1/4

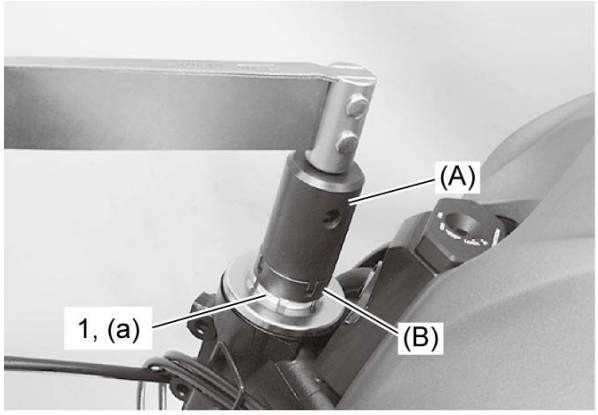

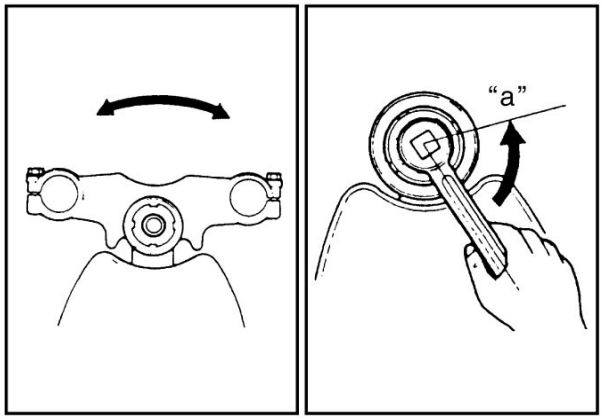

5) In this condition, check that the steering stem lower bracket can turn smoothly without rattle and stiffness. If there is a rattle or heavy movement, readjust the tightness by the stem adjust-nut.

6) When installing the washer (1), align the lug (2) of the washer to the groove of the steering stem.

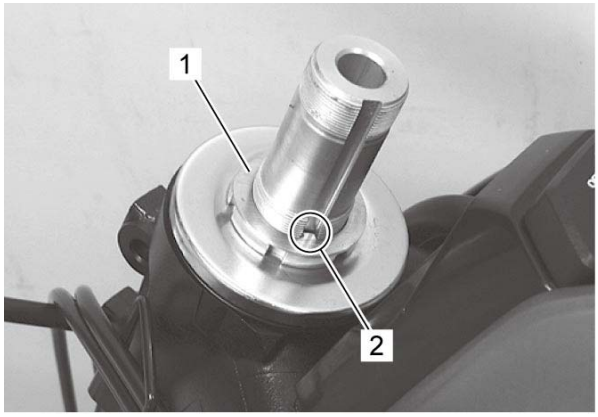

7) Tighten the steering stem lock-nut (1) to the specified torque with the special tools.

Special Tool

(A): 09940–14911
(B): 09940–14960

Tightening torque

Steering stem lock-nut (a): 80 N·m (8.2 kgf-m, 59.0 lbf-ft)

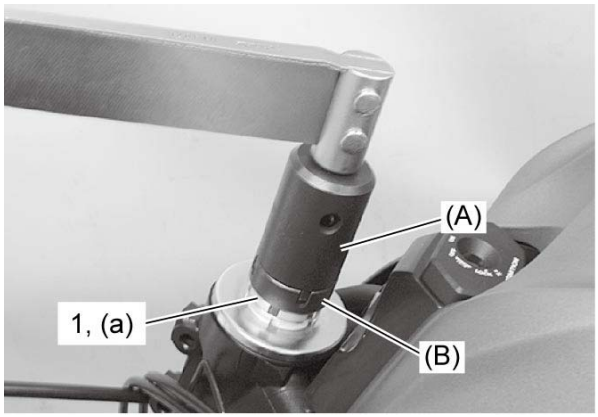

8) Install the lower bracket cover (1) (GSX-S1000F/FA).

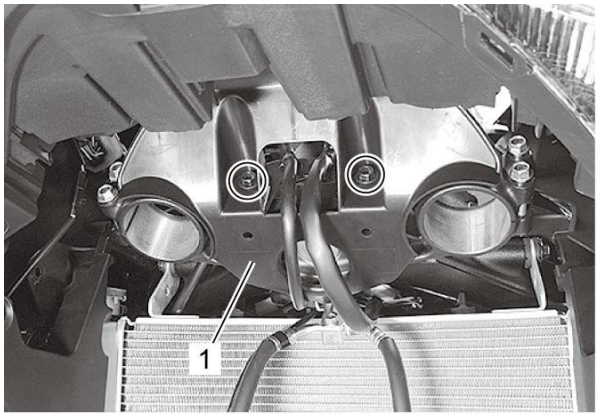

9) Install the steering stem upper bracket (1), washer (2) and steering stem head nut (3) temporarily.

10) Install the front forks (4) temporarily.

11) Tighten the steering stem head nut (3) to the specified torque.

Tightening torque

Steering stem head nut (a): 90 N·m (9.2 kgf-m, 66.5 lbf-ft)

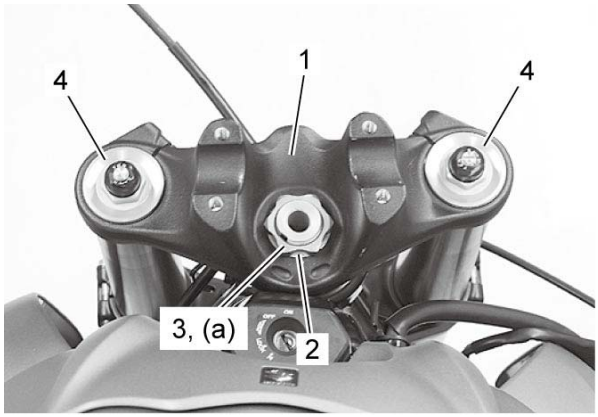

12) Install the front forks. ☞

13) Install the guide (1). Refer to ***Throttle Cable Routing Diagram*** and ***Front Brake Hose Routing Diagram***.

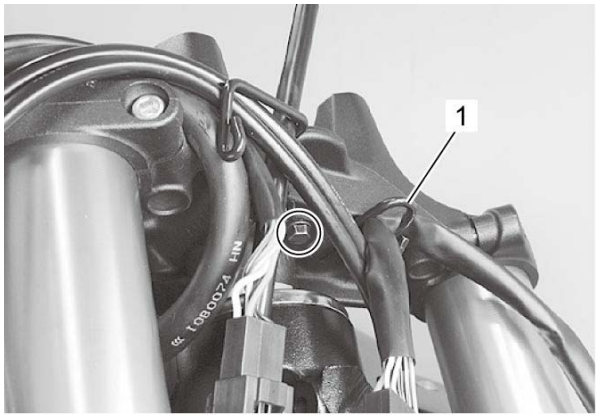

14) Install the handlebars. ☞

15) Check the steering tension. ☞

Steering Stem Upper Bracket Removal and Installation

Reference: Steering Stem Components

Removal

1) Support the motorcycle with a jack.
2) Remove the rear body cowling (GSX-S1000/A). Refer to ***Body Cowling Removal and Installation***.
3) Remove the handlebars. ☞
4) Remove the guide (1).

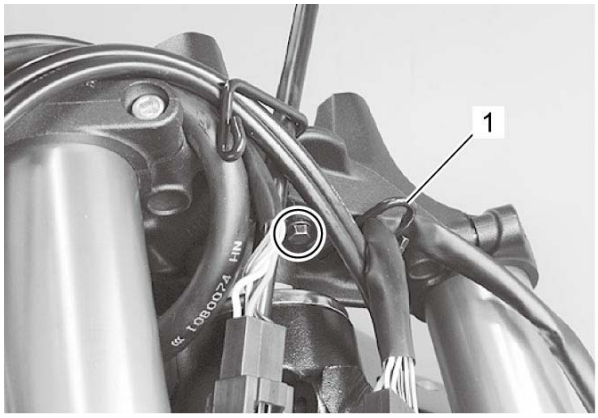

5) Loosen the front fork upper clamp bolts (1).
6) Remove the steering stem head nut (2), washer (3) and steering stem upper bracket assembly (4).

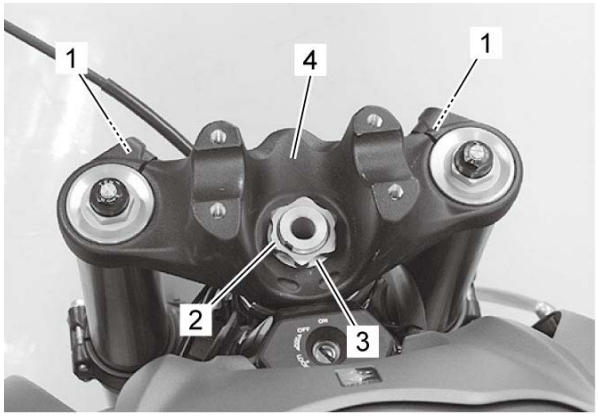

7) Remove the steering lock plate (1).



Installation

1) Apply thread lock to the bolts (1) and install the steering lock plate (2).

"A": Thread lock cement 99000–32150 (THREAD LOCK CEMENT 1322D)

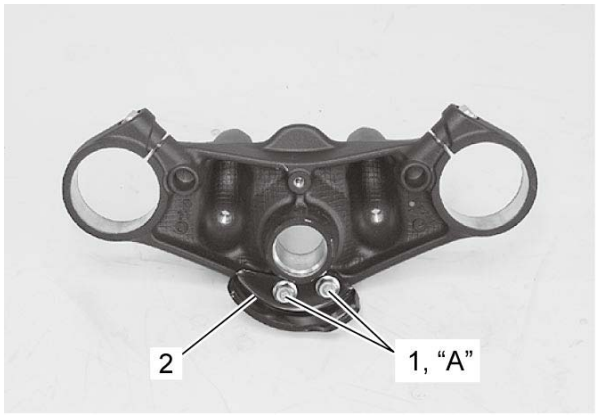

2) Install the steering stem upper bracket (1), washer (2) and steering stem head nut (3).

3) Tighten the steering stem head nut (3) and front fork upper clamp bolts (4) to the specified torque.

Tightening torque

Steering stem head nut (a): 90 N·m (9.2 kgf-m, 66.5 lbf-ft)
Front fork upper clamp bolt (b): 23 N·m (2.3 kgf-m, 17.0 lbf-ft)

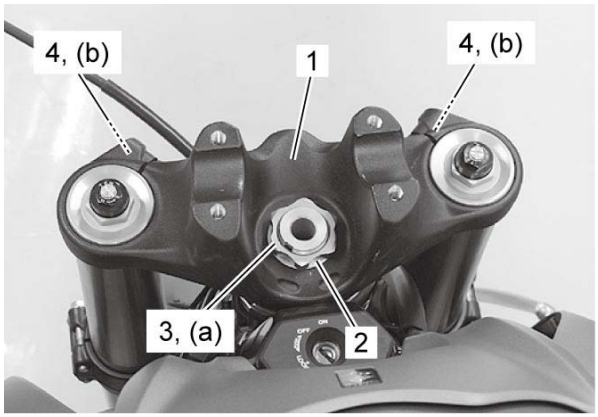

4) Install the guide (1). Refer to ***Throttle Cable Routing Diagram*** and ***Front Brake Hose Routing Diagram***.

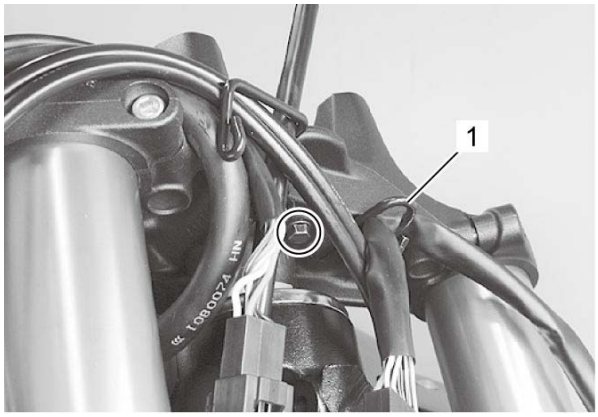

5) Install the handlebars. ☞

6) Install the rear body cowling (GSX-S1000/A). Refer to ***Body Cowling Removal and Installation***.

Steering Tension Adjustment

1) By supporting the motorcycle with a jack, lift the front wheel until it is off the floor 20 – 30 mm (0.8 – 1.2 in).

2) Check to make sure that the cables and wire harnesses are properly routed.

3) With the front wheel in the straight ahead state, hitch the spring scale on one handlebar grip end as shown in the figure and read the graduation when the handlebars start moving.

Steering tension initial force

[Standard]: 2– 5 N (0.21 – 0.50 kgf, 0.50 – 1.12 lbf)

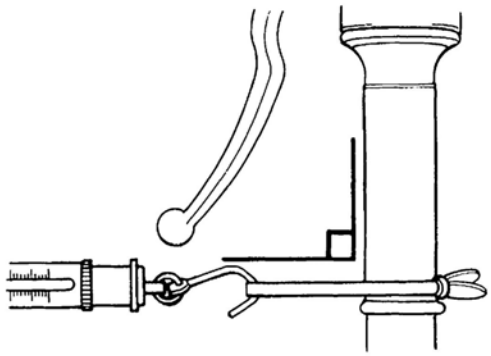

4) Do the same on the other grip end.

5) If the initial force reading on the scale when the handlebars start turning is either too heavy or too light, adjust the tension until it satisfies the specification as follows.

a) Remove the following parts.
- Rear body cowling (GSX-S1000/A): ☞
- Headlight assembly (GSX-S1000F/FA): ☞

b) Remove the handlebars. ☞

c) Remove the guide (1).

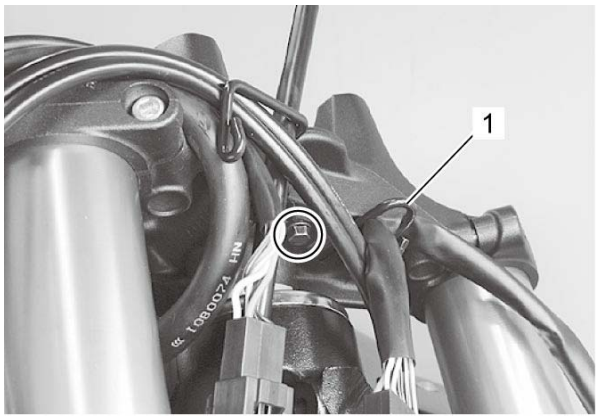

d) First, loosen the front fork upper clamp bolts, steering stem head nut and steering stem lock-nut, and then adjust the steering stem adjust-nut by loosening or tightening it.

Special Tool

(A): 09910–60611

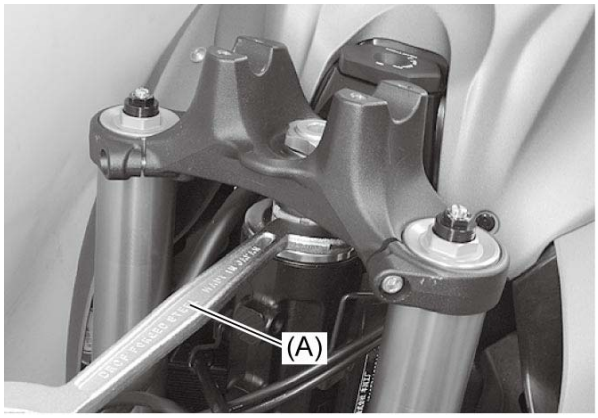

e) Tighten the steering stem lock-nut, steering stem head nut, front fork upper clamp bolts to the specified torque, and recheck the initial force with the spring scale according to the previously described procedure.

Tightening torque

Steering stem lock-nut: 80 N·m (8.2 kgf-m, 59.0 lbf-ft)
Steering stem head nut: 90 N·m (9.2 kgf-m, 66.5 lbf-ft)
Front fork upper clamp bolt: 23 N·m (2.3 kgf-m, 17.0 lbf-ft)

f) Make sure that the initial force is within the specified range and the steering is not loose.

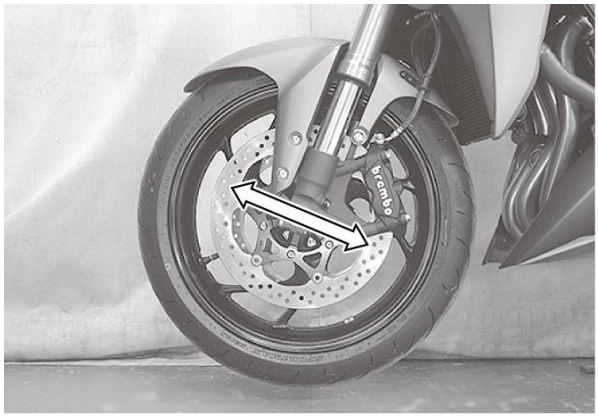

g) Install the removed parts.

Tightening Torque Specifications

Fastening part	Tightening torque			Note
	N·m	kgf-m	lbf-ft	
Handlebar clamp bolt	23	2.3	17.0	☞
Handlebar balancer screw	5.5	0.56	4.05	☞ ☞
Steering stem lock-nut	80	8.2	59.0	☞ ☞
Steering stem head nut	90	9.2	66.5	☞ ☞ ☞
Front fork upper clamp bolt	23	2.3	17.0	☞ ☞
Steering stem adjust-nut	20 N·m (2.0 kgf-m, 15.0 lbf-ft) → turn counterclockwise 0 – 1/4			☞

Reference:
For the tightening torques of fasteners not specified in this page, refer to:
Handlebar Components
Handlebar Construction
Steering Stem Components
Fasteners Information

Recommended Service Material

Material	SUZUKI recommended product or Specification		Note
Adhesive	Handle grip glue	—	☞
Grease	SUZUKI SUPER GREASE A	P/No.: 99000–25011	☞ ☞
	SUZUKI WATER RESISTANT GREASE EP2	P/No.: 99000–25350	☞
Thread lock cement	THREAD LOCK CEMENT 1322D	P/No.: 99000–32150	☞

NOTE:
Required service material(s) is also described in:
Handlebar Components
Handlebar Construction
Steering Stem Components

Special Tool

09910–60611 Adjustable hook wrench ☞	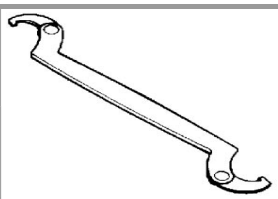	09913–70210 Bearing installer set ☞	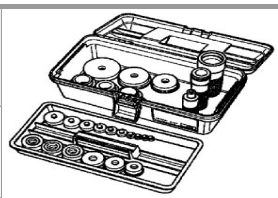
09925–18011 Bearing installer ☞	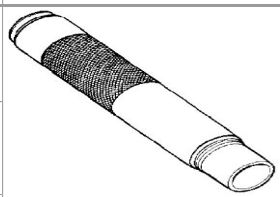	09940–14911 Steering stem nut socket ☞ ☞ ☞	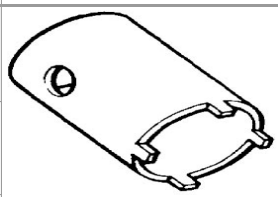
09940–14960 Steering stem nut socket wrench ☞ ☞ ☞	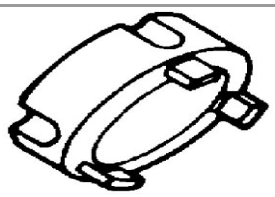	09940–51710 Bearing installer ☞	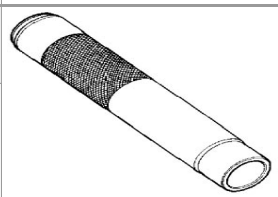
09941–34513 Bearing installer set ☞	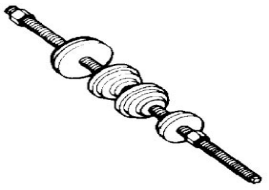	09941–54911 Bearing outer race remover ☞	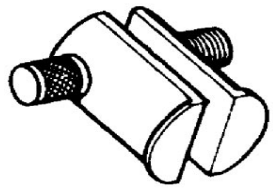

Clutch System Symptom Diagnosis

Condition	Possible Cause	Action
Noisy engine (Noise seems to come from the clutch)	Worn countershaft spline.	*Replace countershaft.* ☞
	Worn clutch sleeve hub spline.	*Replace clutch sleeve hub.* ☞ ☞
	Worn clutch plate teeth.	*Replace clutch plate.* ☞ ☞
	Distorted clutch plates, driven and drive.	*Replace.* ☞ ☞
	Worn clutch release bearing.	*Replace.* ☞ ☞
	Weakened clutch damper spring.	*Replace primary driven gear.* ☞ ☞
Clutch slips	Clutch cable play out of adjustment.	*Adjust.* ☞
	Weakened clutch springs.	*Replace.* ☞ ☞
	Worn or distorted clutch pressure plate.	*Replace.* ☞ ☞
	Distorted clutch plates.	*Replace.* ☞ ☞
Clutch drags	Clutch cable play out of adjustment.	*Adjust.* ☞
	Some clutch springs are weak, while others are not.	*Replace.* ☞ ☞
	Worn or distorted clutch pressure plate.	*Replace.* ☞ ☞
	Distorted clutch plates.	*Replace.* ☞ ☞

Clutch Components

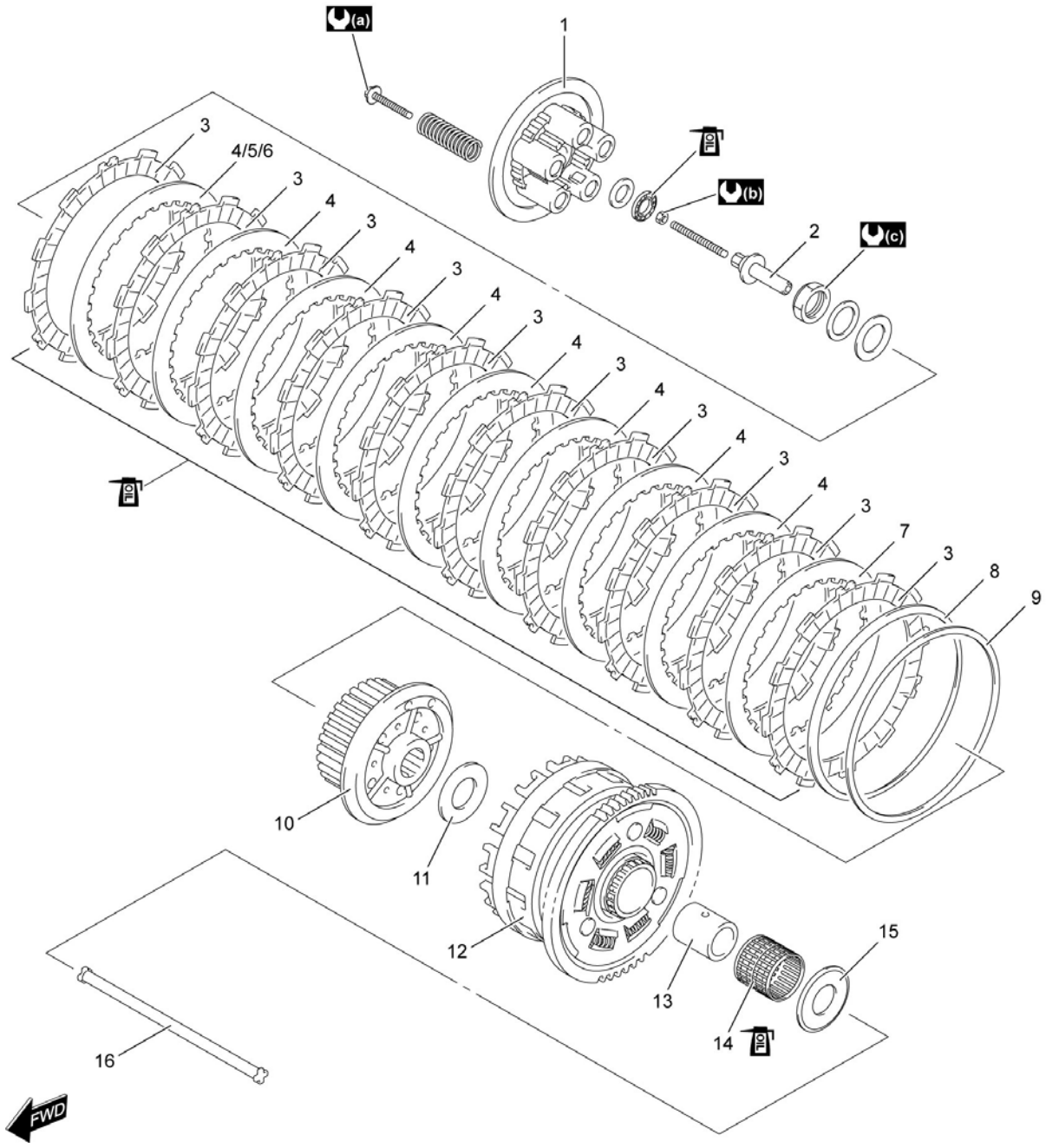

1.	Clutch pressure plate	8.	Wave washer	15.	Primary driven gear thrust washer
2.	Clutch push piece	9.	Wave washer seat	16.	Push rod
3.	Drive plate (10 pcs.)	10.	Clutch sleeve hub	(a):	10 N·m (1.0 kgf-m, 7.5 lbf-ft)
4.	Driven plate No. 1 (7 – 8 pcs.)	11.	Thrust washer	(b):	5.5 N·m (0.56 kgf-m, 4.05 lbf-ft)

5.	Driven plate No. 2 (0 – 1 pc.)	12.	Primary driven gear assembly	 :	150 N·m (15.3 kgf-m, 111.0 lbf-ft)
6.	Driven plate No. 3 (0 – 1 pc.)	13.	Spacer	 :	Apply engine oil.
7.	Driven plate No. 4 (1 pc.)	14.	Bearing		

Clutch Cable Play Inspection and Adjustment

Inspect and adjust the clutch cable play “a” as follows.

Clutch cable play

[Standard]: 10 – 15 mm (0.4 – 0.6 in)

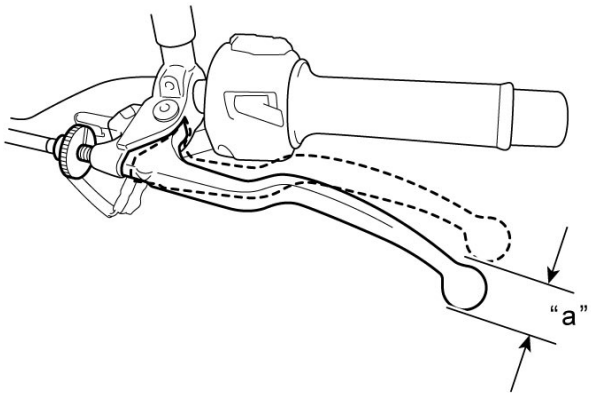

1) Lift and support the fuel tank.

2) Turn in the adjuster (1) all the way into the clutch lever assembly.

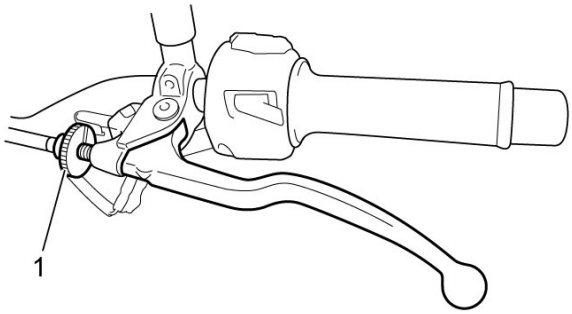

3) Loosen the lock-nut (1) and turn the clutch cable adjuster (2) to obtain proper cable play.

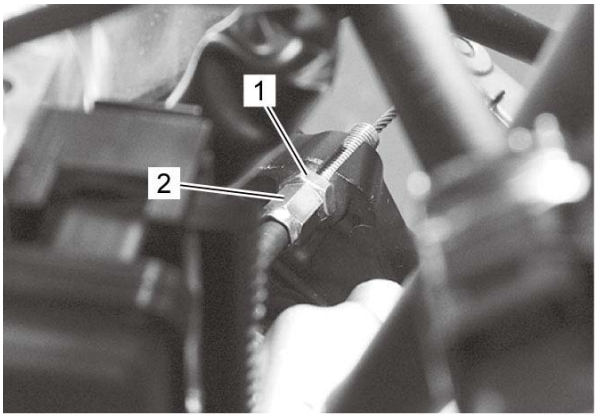

4) Remove the clutch release adjuster cap (1).
5) Loosen the lock-nut (2) and turn out the clutch release adjuster screw (3) two or three rotations.
6) From that position, slowly turn in the clutch release adjuster screw (3) until resistance is felt.
7) From this position, turn out the clutch release adjuster screw (3) 1/2 rotation, and tighten the lock-nut (2) while holding the screw (3).

Tightening torque

Clutch release adjuster nut (a): 5.5 N·m (0.56 kgf-m, 4.05 lbf-ft)

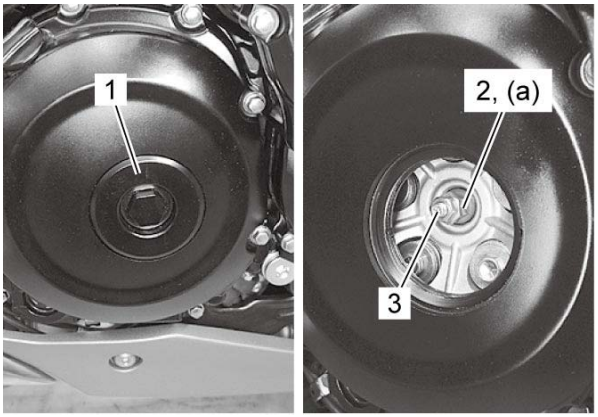

8) Turn the clutch cable adjuster (1) fully.
9) Tighten the lock-nut (2) to the specified torque.

Tightening torque

Clutch cable lock-nut (a): 4.5 N·m (0.46 kgf-m, 3.35 lbf-ft)

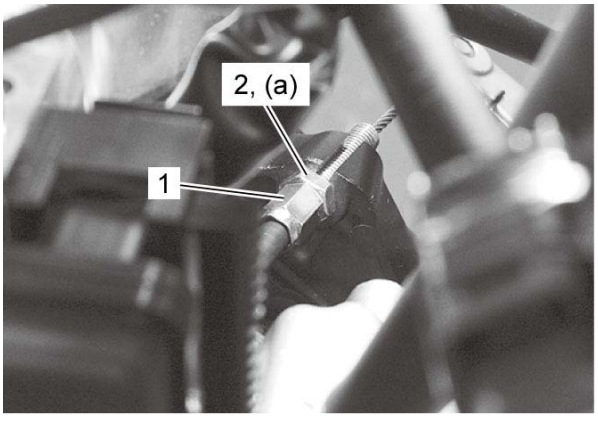

10) Install the clutch release adjuster cap.

Tightening torque

Clutch release adjuster cap: 11 N·m (1.1 kgf-m, 8.5 lbf-ft)

11) Install the removed parts.

12) Turn the adjuster (1) to obtain 10 – 15 mm (0.4 – 0.6 in) of free play “a” at clutch lever end.

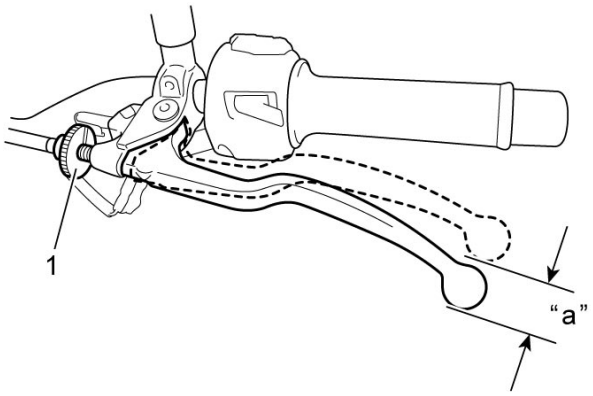

Clutch Cable Removal and Installation

Removal

1) Loosen the cable adjuster nut (1).
2) Align the clutch lever and cable adjuster nut (1) with the cutaway.
3) Disconnect the clutch cable (2) from the clutch lever side.

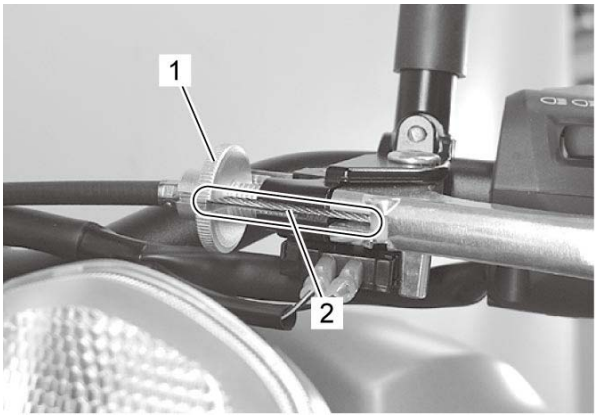

4) Disconnect the clutch cable (1).

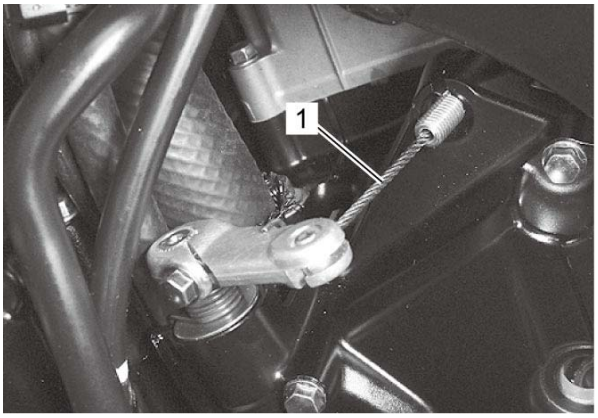

5) Remove the clamp (1).

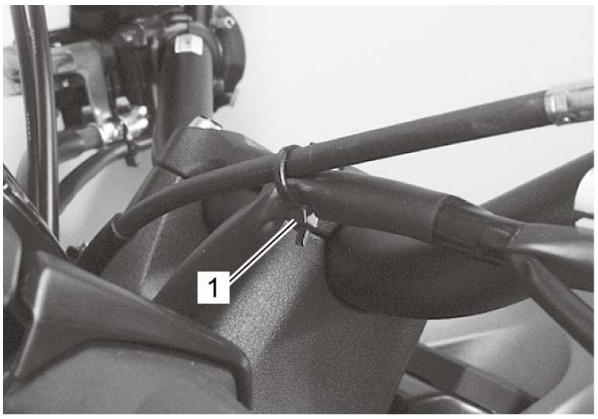

6) Lift and support the fuel tank. ☞

7) Remove the EVAP canister (if equipped). Refer to ***EVAP Control System Removal and Installation (If Equipped)***.

8) Loosen the clutch cable lock-nut (1).

9) Remove the clutch cable adjuster (2) from the engine sprocket cover.

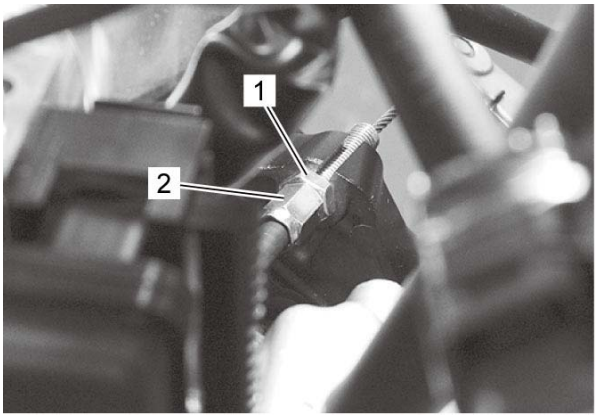

Installation

Install the clutch cable in the reverse order of removal. Pay attention to the following points:

- Install the clutch cable as shown in the throttle cable routing diagram. Refer to ***Throttle Cable Routing Diagram***.
- After install the removed parts, adjust the clutch cable play. ☞

Clutch Control System Components

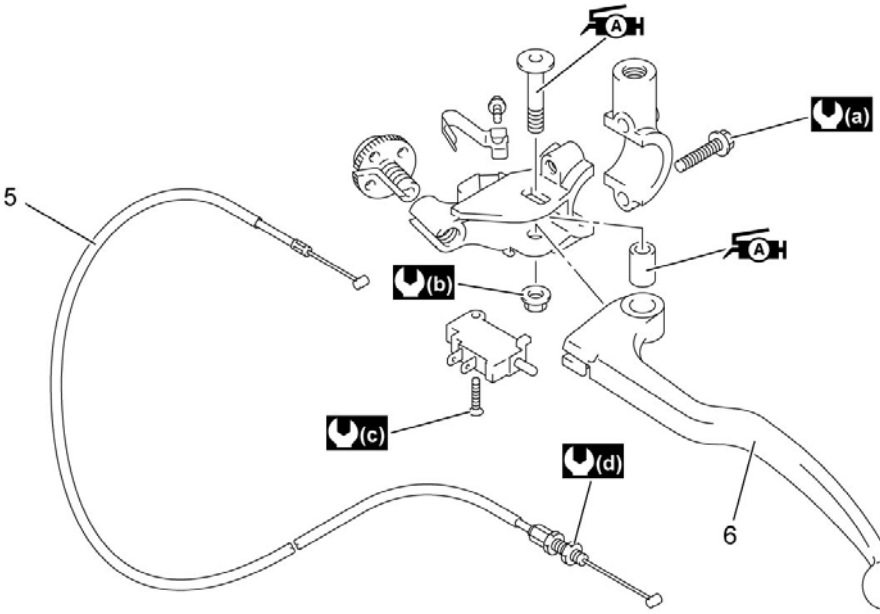

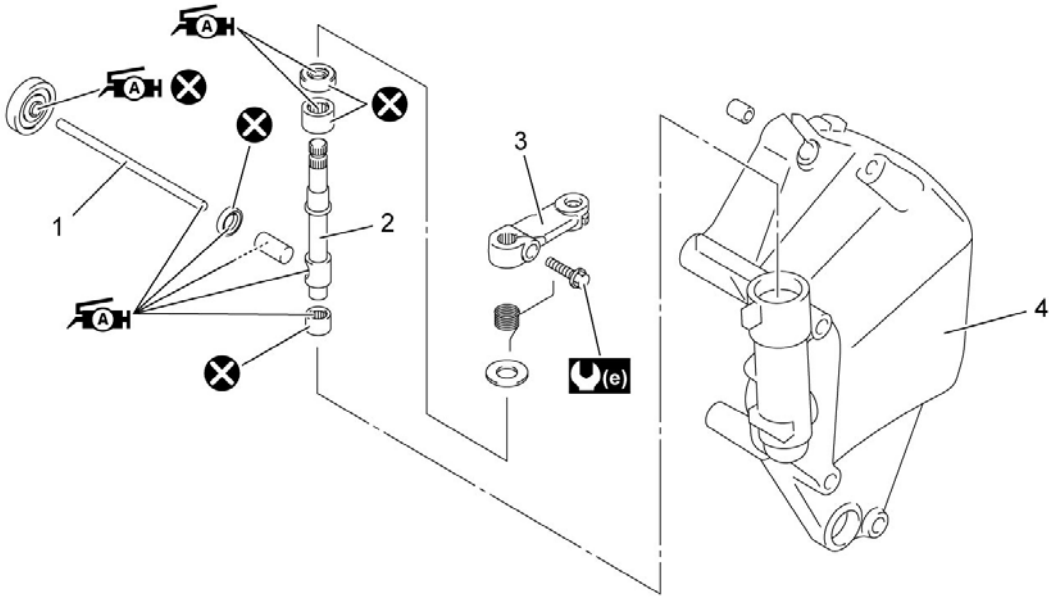

1.	Push rod (Left)	6.	Clutch lever	(e):	9 N·m (0.92 kgf-m, 6.65 lbf-ft)
2.	Clutch release camshaft	(a):	10 N·m (1.0 kgf-m, 7.5 lbf-ft)	A:	Apply grease.
3.	Clutch release arm	(b):	6.5 N·m (0.66 kgf-m, 4.80 lbf-ft)	:	Do not reuse.

4.	Engine sprocket cover		0.6 N·m (0.06 kgf-m, 0.45 lbf-ft)		
5.	Clutch cable		4.5 N·m (0.46 kgf-m, 3.35 lbf-ft)		

Clutch Installation

Reference: Clutch Parts Inspection
Reference: Clutch Components

1) Install the oil pump drive gear (1).

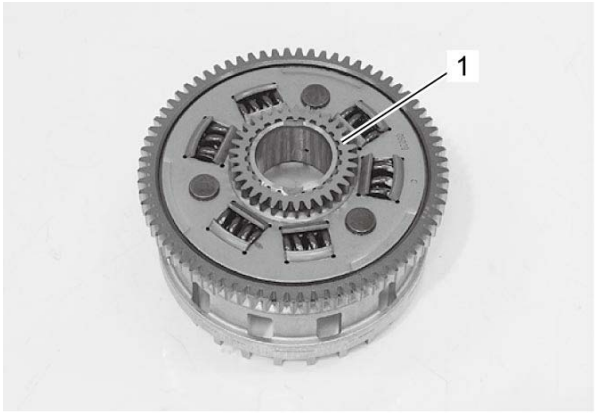

2) Install the thrust washer (1).

NOTE:
The tapered portion (2) of thrust washer (1) faces the crankcase side.

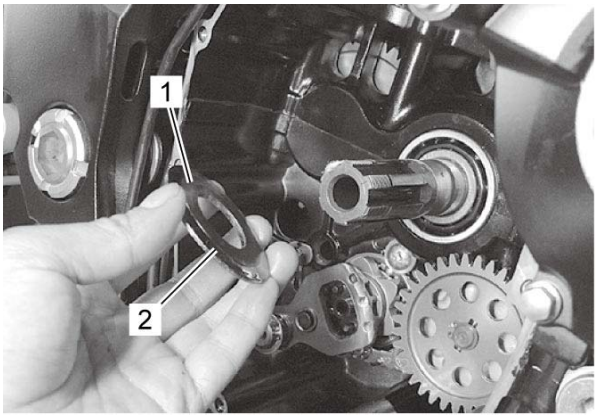

3) Install the primary driven gear assembly (1).

NOTE:
If it is difficult to install the primary driven gear, rotate the crankshaft.

4) Apply engine oil to the bearing (2) and install it.
5) Install the spacer (3).

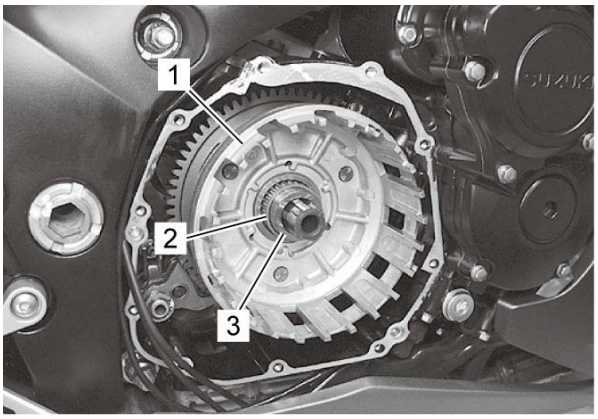

6) Install the thrust washer (1).

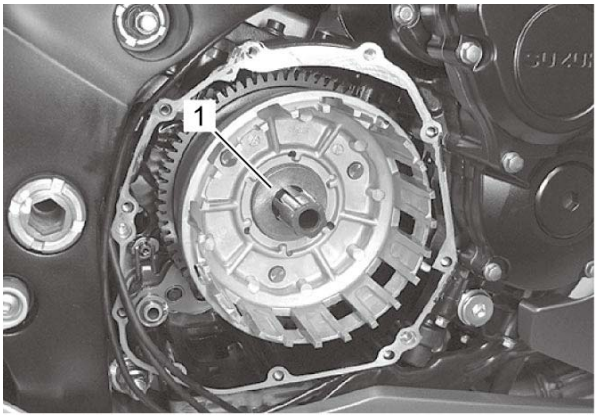

7) Install the clutch sleeve hub (1), washer (2) and spring washer (3).

NOTE:
The conical curve side of spring washer (3) faces outside.

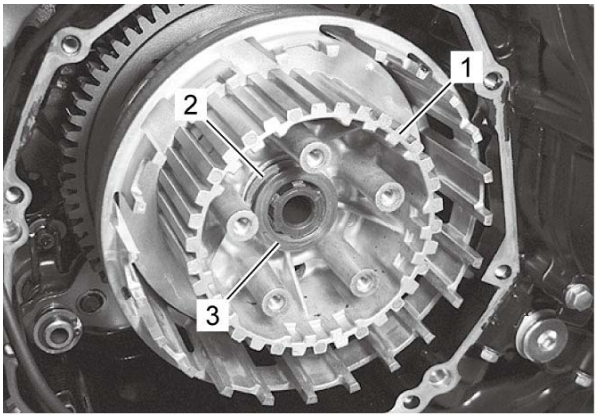

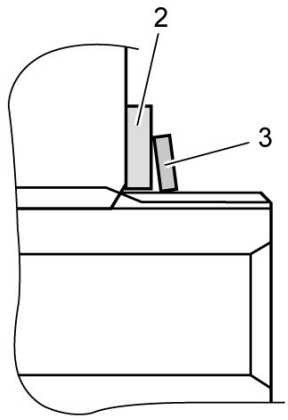

8) Hold the clutch sleeve hub with the special tool and tighten the clutch sleeve hub nut (1) to the specified torque.

Special Tool

(A): 09920–53740
(B): 09920–31020

Tightening torque

Clutch sleeve hub nut (a): 150 N·m (15.3 kgf-m, 111.0 lbf-ft)

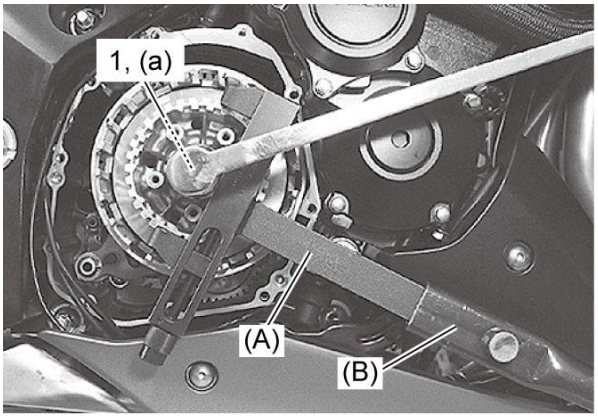

9) Lock the clutch sleeve hub nut (1) with a center punch.

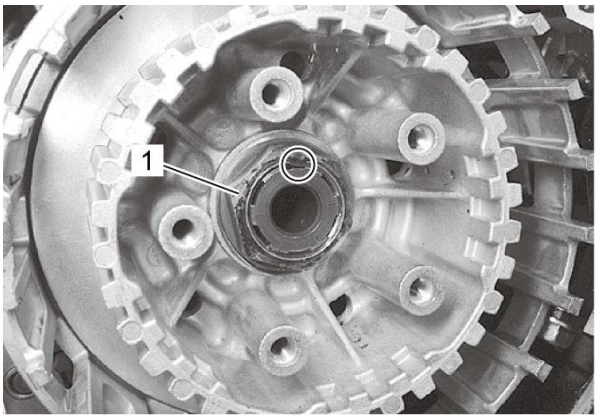

10) Install the clutch push rod (1) into the countershaft.

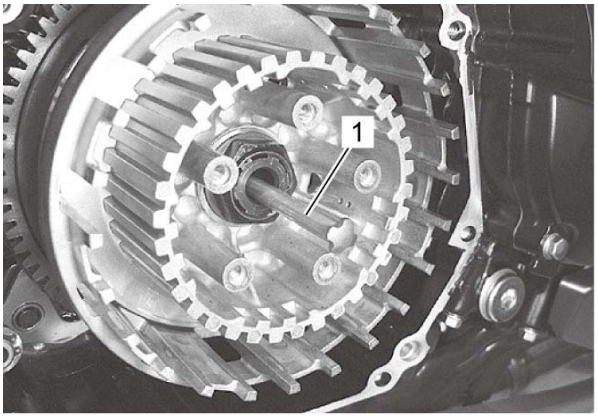

11) Apply engine oil to the bearing (1).

12) Install the clutch push piece (2), bearing (1) and thrust washer (3) to the countershaft.

NOTE:
Thrust washer (3) is located between the pressure plate and bearing (2).

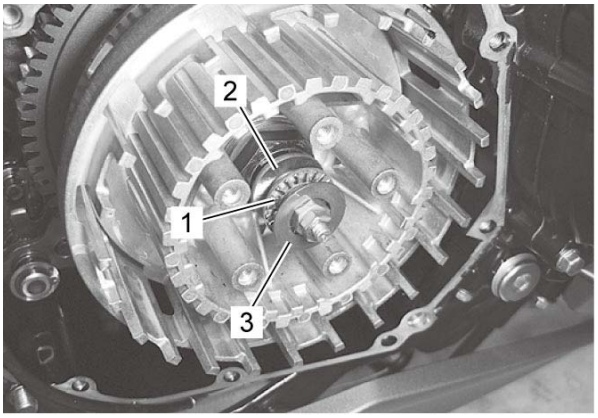

13) Install the wave washer seat (1) and wave washer (2) onto the clutch sleeve hub correctly.

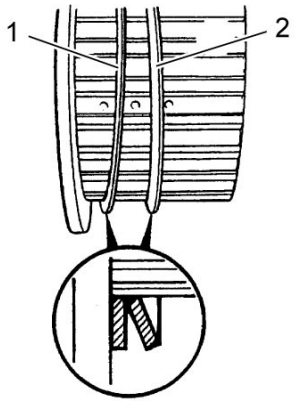

14) Apply engine oil to the clutch drive plates.

15) Insert the clutch drive plates and driven plates one by one into the clutch sleeve hub in the prescribed order.

NOTE:
Insert the outermost drive plate claws (1) to the other slits (2) of clutch housing as shown.

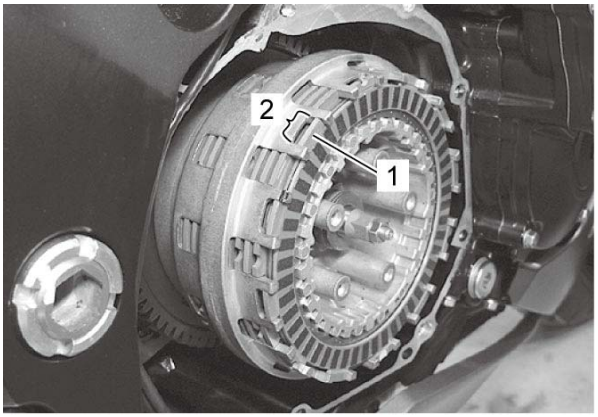

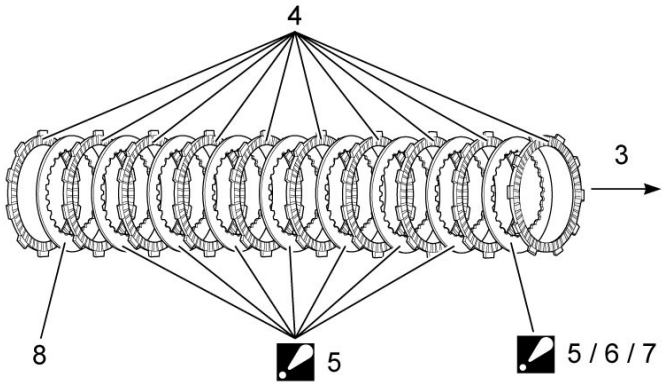

3.	Direction of outside (Clutch pressure plate side)
4.	Drive plate (10 pcs.)
5.	Driven plate No. 1 (7 – 8 pcs.) : The driven plates No. 1 and No. 2 or No. 3 are 8 pcs. in total.
6.	Driven plate No. 2 (0 – 1 pc.) : The driven plates No. 1 and No. 2 or No. 3 are 8 pcs. in total.
7.	Driven plate No. 3 (0 – 1 pc.) : The driven plates No. 1 and No. 2 or No. 3 are 8 pcs. in total.
8.	Driven plate No. 4 (1 pc.)

NOTE:

For driven plate

Basically in this motorcycle, 8 pcs. of the driven plate No. 1 and 1 pc. of the driven plate No. 4 are installed. Instead of 1 pc. of the No. 1, however, sometimes same pcs. of the driven plate No. 2 or No. 3 may have been installed at the factory for the purpose of fine adjusting the overall thickness of clutch plates. The driven plate No. 2 or No. 3 should be installed in the pressure plate side.
When replacing the driven plate in the aftermarket, always use the driven plate No. 1.

Driven plate	Thickness	Color
No. 1	2.3 mm (0.09 in)	Silver
No. 2	2.0 mm (0.08 in)	Silver
No. 3	2.6 mm (0.10 in)	Silver
No. 4	2.3 mm (0.09 in)	Dark gray

16) Install the pressure plate (1).
17) Install the clutch springs and set bolts (2).
18) Tighten the clutch spring set bolts (2) to the specified torque.

Tightening torque

Clutch spring set bolt (a): 10 N·m (1.0 kgf-m, 7.5 lbf-ft)

NOTE:
Tighten the clutch spring set bolt little by little and diagonally.

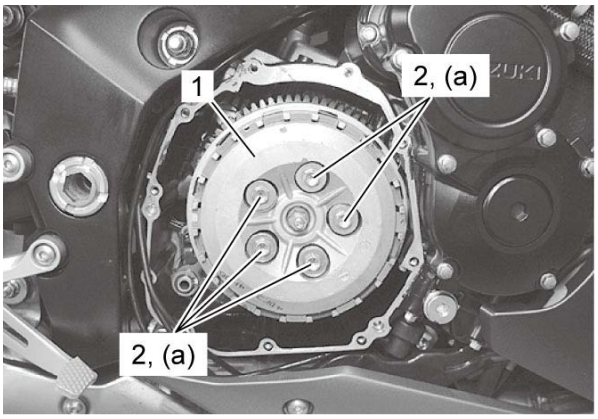

19) Loosen the lock-nut (1) and turn in the clutch release adjusting screw (2) until resistance is felt.

20) From that position, turn out the clutch release adjusting screw (2) 1/2 turn and tighten the lock-nut (1) while holding the screw (2).

Tightening torque

Clutch release adjuster nut (a): 5.5 N·m (0.56 kgf-m, 4.05 lbf-ft)

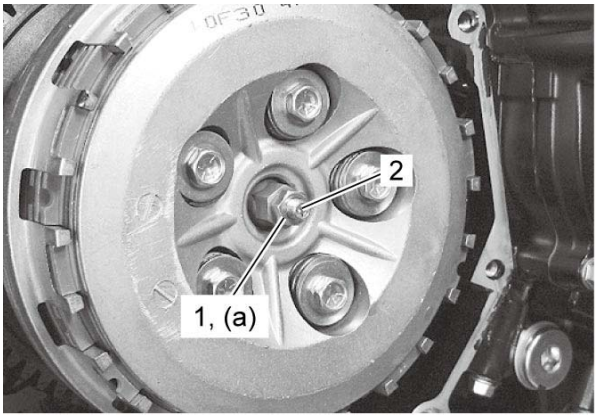

21) Apply sealant lightly to the mating surfaces at the parting line between the upper and middle, middle and lower crankcases as shown in the figure.

"A": Sealant 99000–31140 (SUZUKI BOND 1207B)

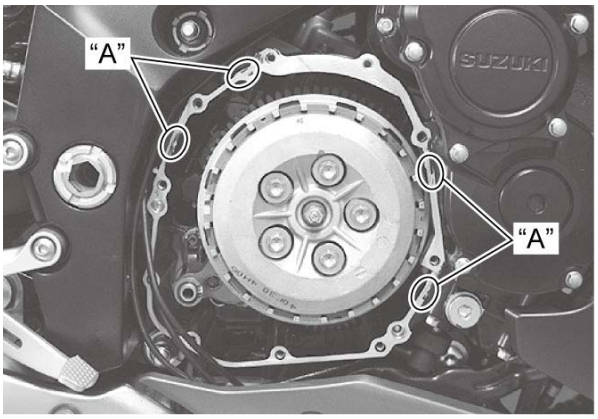

22) Install the dowel pins (1) and new gasket (2).

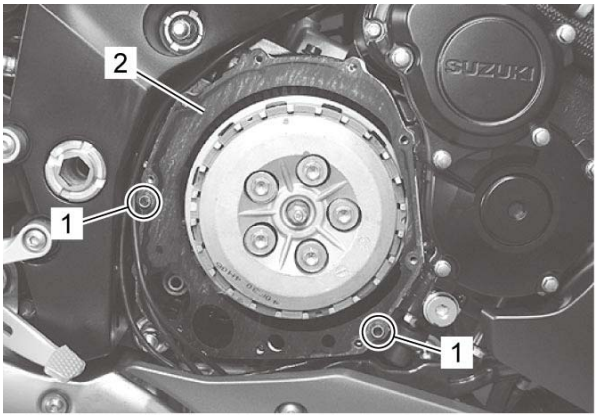

23) Install the clutch cover.
24) Fit the new gasket to the clutch cover bolts (1).
25) Tighten the clutch cover bolts (1), (2) and (3) to the specified torque.

Tightening torque

Clutch cover bolt (a): 10 N·m (1.0 kgf-m, 7.5 lbf-ft)

NOTE:
Fit the clamps to the bolts (3).

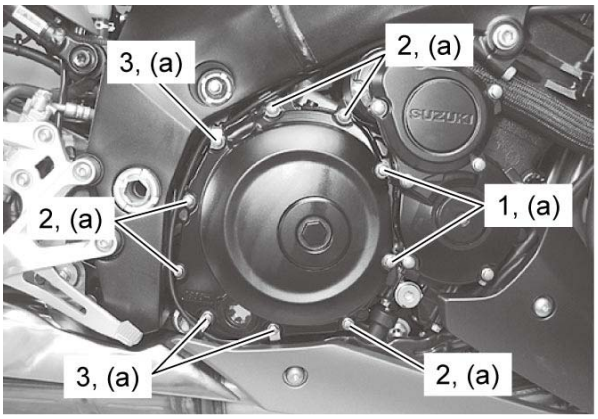

26) Install the right side cowling assembly (GSX-S1000F/FA). ☞

27) Pour engine oil. ☞

Clutch Lever Removal and Installation

Reference: Clutch Control System Components

Removal

1) Disconnect the clutch switch lead wires (1).



2) Disconnect the clutch cable from the clutch lever side. ☞

3) Remove the left rear view mirror (1) and clutch lever holder (2).

4) Remove the clutch lever assembly.

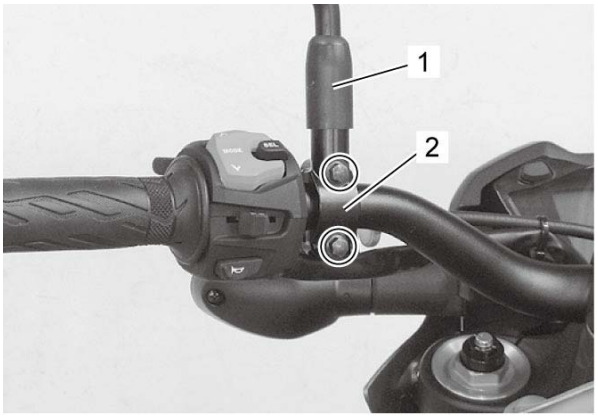

5) Remove the clutch switch (1) and clutch lever (2).

6) Remove the spring (3) and cable adjuster nut (4).

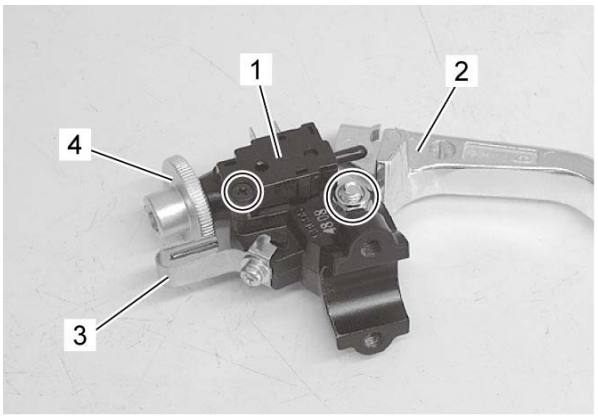

7) Remove the collar (1).

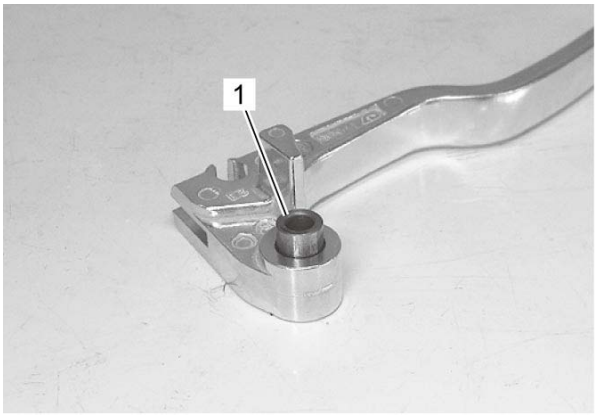

Installation

Install the clutch lever in the reverse order of removal. Pay attention to the following points:

- Apply grease to the collar and clutch lever pivot bolt.

  "A": Grease 99000–25011 (SUZUKI SUPER GREASE A)

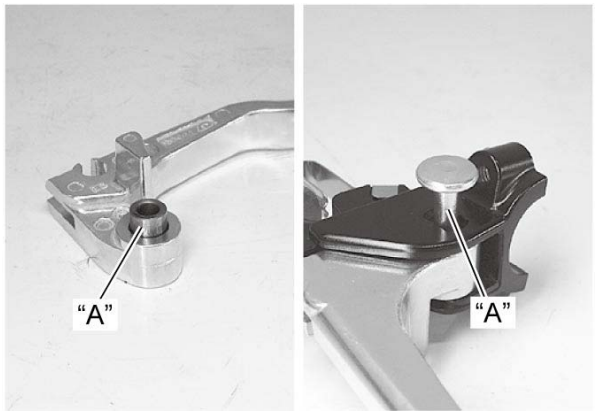

- Tighten the clutch lever pivot nut (1) to the specified torque.

Tightening torque

Clutch lever pivot nut (a): 6.5 N·m (0.66 kgf-m, 4.80 lbf-ft)

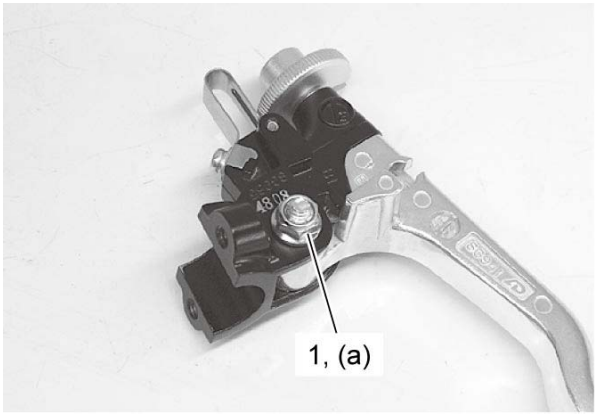

- When installing the clutch switch (1), align the projection (2) on the switch with the groove (3) in the clutch lever holder.

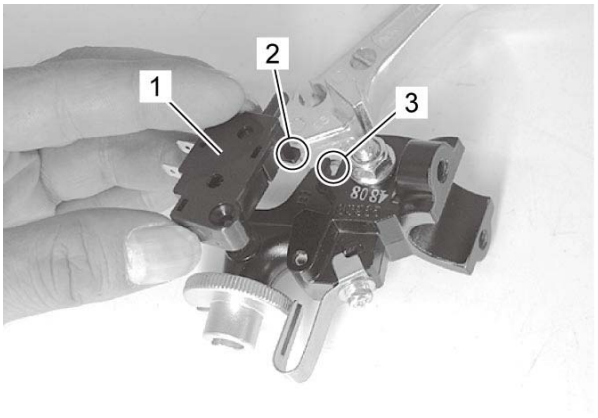

- Tighten the clutch switch screw (1) to the specified torque.

Tightening torque

Clutch switch screw (a): 0.6 N·m (0.06 kgf-m, 0.45 lbf-ft)

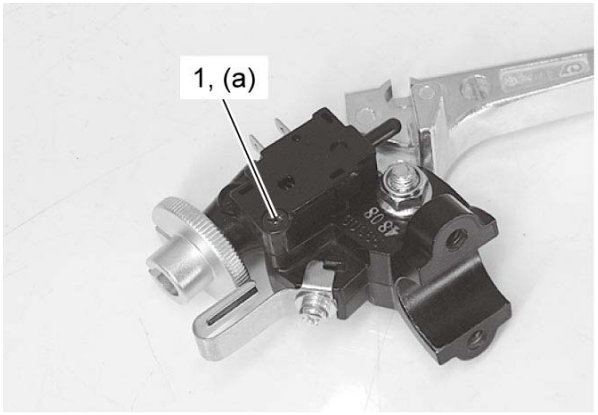

- When installing the clutch lever assembly (1) onto the handlebars (2), align the edge (3) of clutch lever assembly with the punch mark (4) on the handlebars (2) and tighten the upper bolt (5) first.

Tightening torque

Clutch lever holder bolt (a): 10 N·m (1.0 kgf-m, 7.5 lbf-ft)

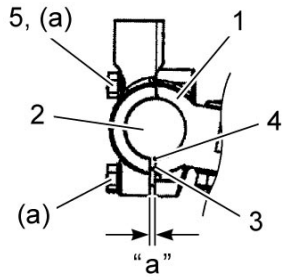

“a”:	Clearance

- After installing the removed parts, adjust the clutch cable play. ☞

Clutch Parts Inspection

Refer to ***Clutch Removal*** and ***Clutch Installation***.

Clutch Drive and Driven Plate

NOTE:
Wipe off the engine oil from the drive and driven plates with a clean rag.

Measure the thickness of drive plates with a vernier calipers. If the drive plate thickness is found to have reached the limit, replace it with a new one.

Special Tool
(A): 09900–20102

Drive plate thickness
[Limit]: 2.42 mm (0.0953 in)

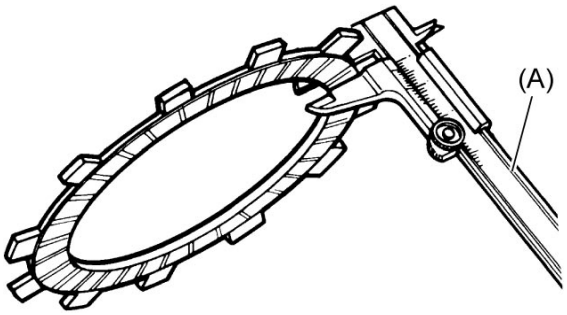

Measure the claw width of drive plates with a vernier calipers. Replace the drive plates found to have worn down to the limit.

Special Tool
(A): 09900–20102

Drive plate claw width
[Limit]: 13.35 mm (0.5256 in)

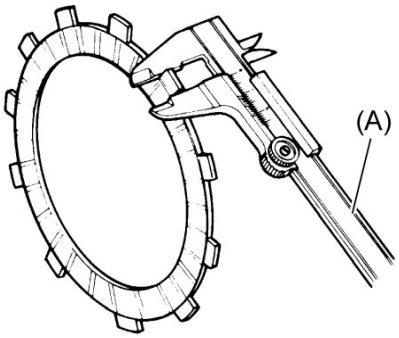

Measure each driven plate for distortion with a thickness gauge and surface plate.
Replace driven plates which exceed the limit.

Special Tool

(A): 09900–20803

Driven plate distortion

[Limit]: 0.10 mm (0.0039 in)

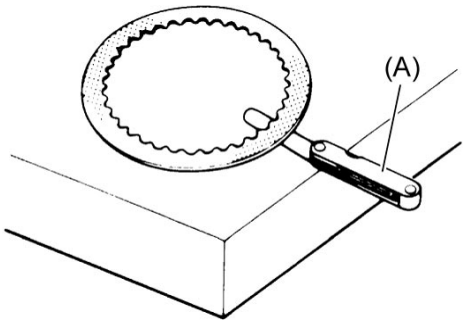

Clutch Spring

Measure the free length of each coil spring with a vernier calipers, and compare the length with the specified limit.
Replace all the springs if any spring is not within the limit.

Special Tool

(A): 09900–20102

Clutch spring free length

[Limit]: 63.4 mm (2.50 in)

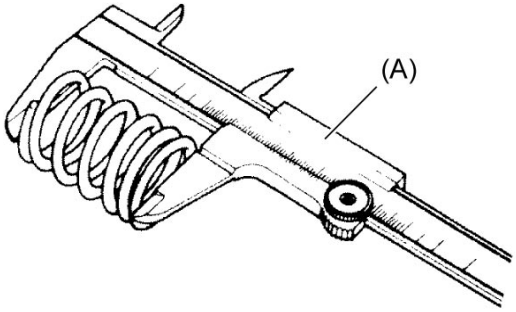

Clutch Release Bearing

Inspect the clutch release bearing (1) for any abnormality, especially cracks. When removing the bearing from the clutch, decide whether it can be reused or if it should be replaced.
Smooth engagement and disengagement of the clutch depends on the condition of this bearing.

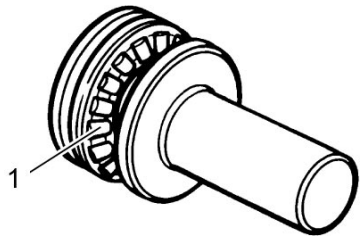

Push Rod (Right)

Inspect the push rod for wear and damage.
If any defects are found, replace the push rod with a new one.



Clutch Sleeve Hub and Primary Driven Gear Assembly

Inspect the slot of the clutch sleeve hub and primary driven gear assembly for damage or wear caused by the clutch plates. If necessary, replace it with a new one.

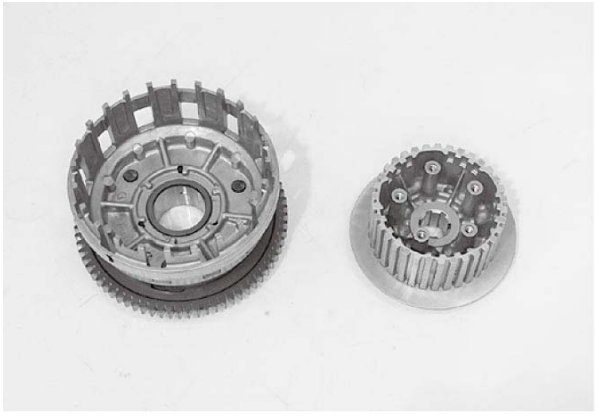

Clutch Push Rod (Left) / Clutch Release Camshaft Removal and Installation

Reference: Clutch Control System Components

Removal

1) Lift and support the fuel tank. ☞

2) Remove the EVAP canister (if equipped). ☞

3) Remove the gearshift link arm (1).

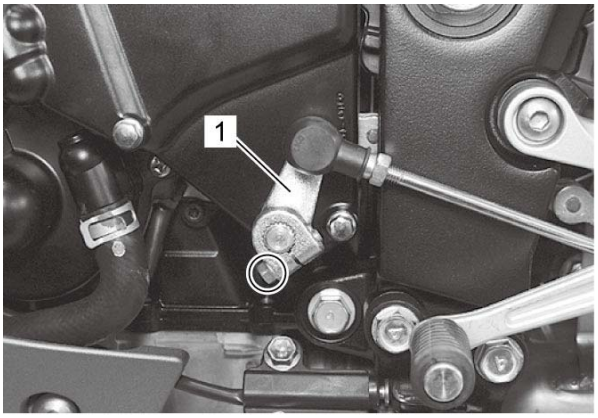

4) Remove the clutch release arm (1) and spring (2).

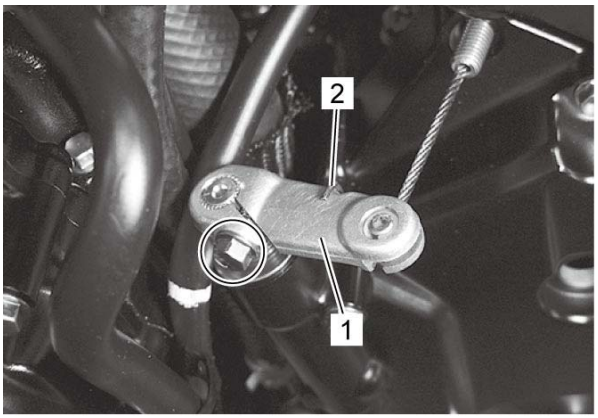

5) Loosen the clutch cable lock-nut (1).

6) Remove the clutch cable adjuster (2).

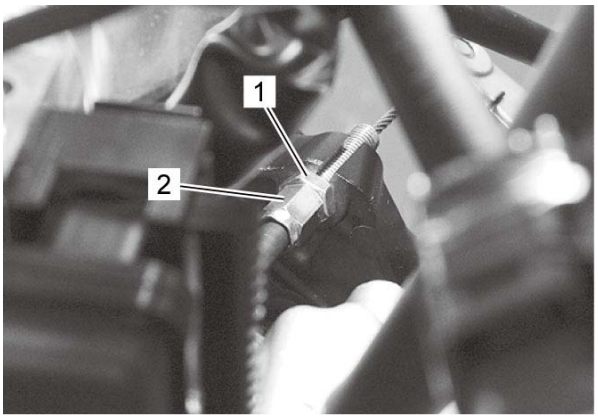

7) Remove the engine sprocket cover (1).

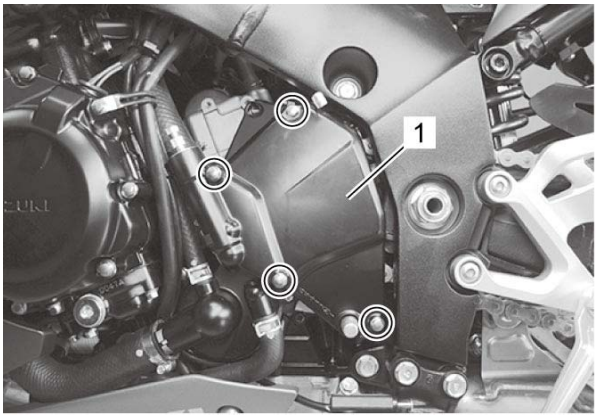

8) Remove the clutch push rod (Left) (1) and dowel pins (2).

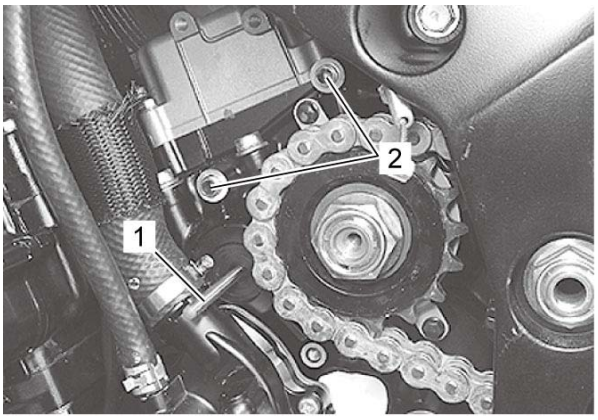

9) Remove the clutch push rod cap (1) and oil seal (2).

10) Remove the washer (3) and oil seal (4).

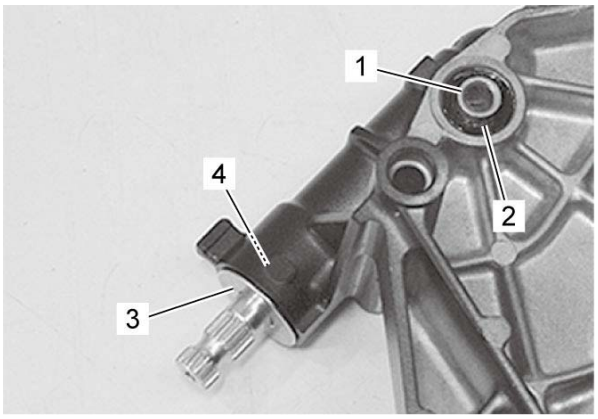

11) Remove the clutch release camshaft upper bearing (1) with clutch release camshaft (2).
12) Remove the clutch release camshaft lower bearing (3).

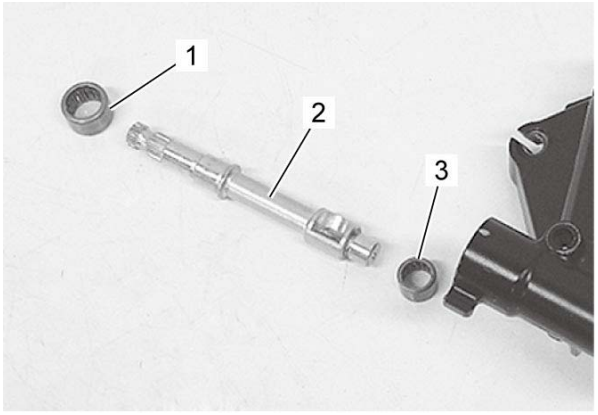

Installation

Install the clutch push rod (left) and clutch release camshaft in the reverse order of removal. Pay attention to the following points:

- Apply grease to the new bearings.

  "A": Grease 99000–25011 (SUZUKI SUPER GREASE A)

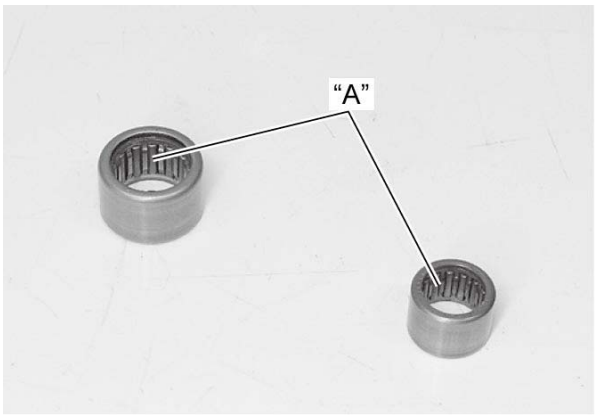

- Install the clutch release camshaft lower bearing (1) and upper bearing (2).

NOTE:
The stamped mark side of bearings faces outside.

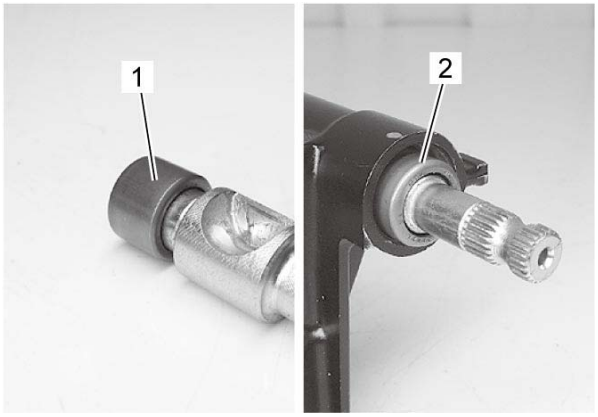

- Apply grease to the contact position of clutch release camshaft (1), new oil seal lips (2) and clutch push rod cap (3).

“A”: Grease 99000–25011 (SUZUKI SUPER GREASE A)

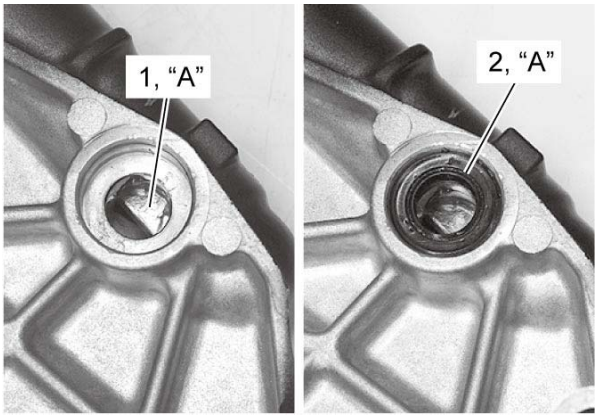

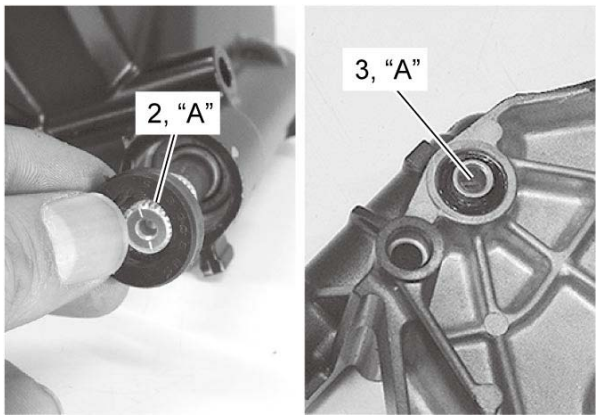

- Apply a small quantity of grease to oil seal lip (1) and the clutch push rod end (2).
  “A”: Grease 99000–25011 (SUZUKI SUPER GREASE A)

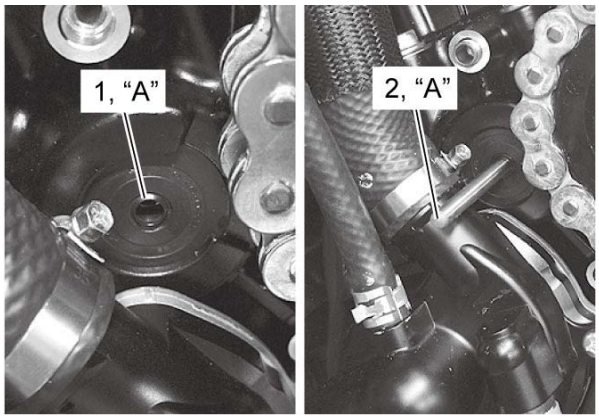

- Install the engine sprocket cover (1).

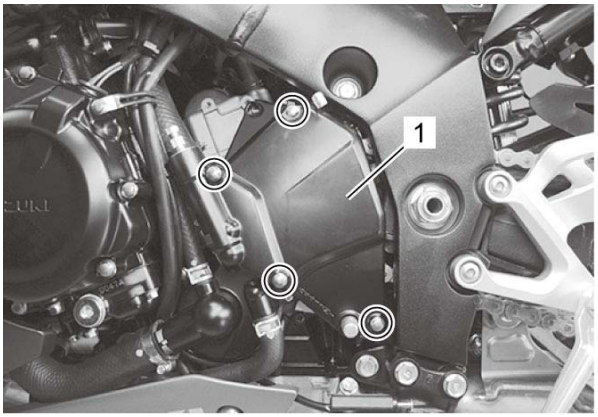

- When installing the clutch release arm, align the punch mark (1) of clutch release arm with slit (2) of clutch release camshaft.
- Hook the spring end (3) to the clutch release arm and engine sprocket cover.
- Tighten the clutch release arm bolt (4) to the specified torque.

Tightening torque

Clutch release arm bolt (a): 9 N·m (0.92 kgf-m, 6.65 lbf-ft)

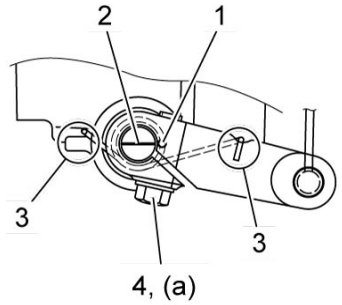

- After installing, adjust the clutch cable play and check the gearshift lever height. ☞ and ☞

Clutch Push Rod (Left) Inspection

Refer to ***Clutch Push Rod (Left) / Clutch Release Camshaft Removal and Installation***.
Inspect the push rod for wear or bend. If any defects are found, replace it with a new one.



Clutch Removal

Reference: Clutch Components

1) Drain engine oil. ☞

2) Remove the right side cowling assembly (GSX-S1000F/FA). ☞

3) Remove the clutch cover (1).

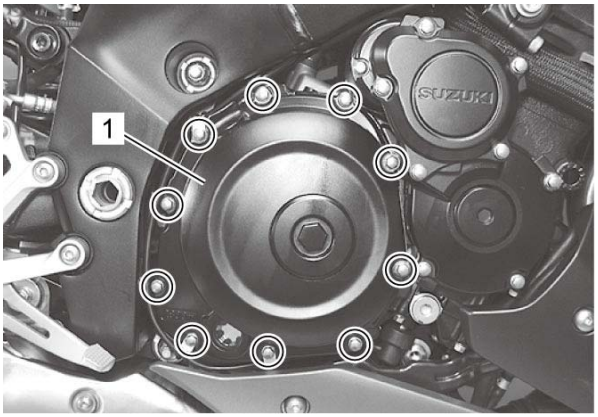

4) Remove the gasket (1) and dowel pins (2).

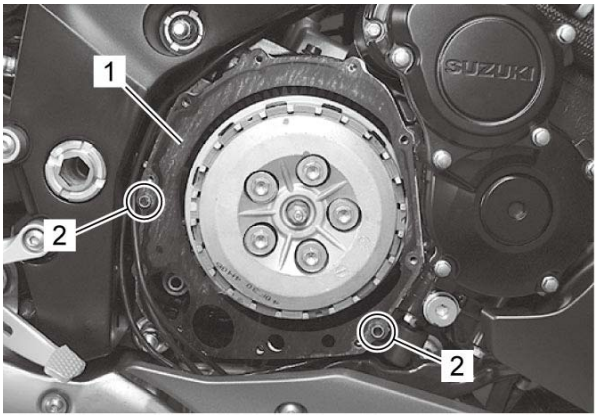

5) Remove the clutch spring set bolts (1), clutch springs and pressure plate (2).

NOTE:
Loosen the clutch spring set bolts little by little and diagonally.

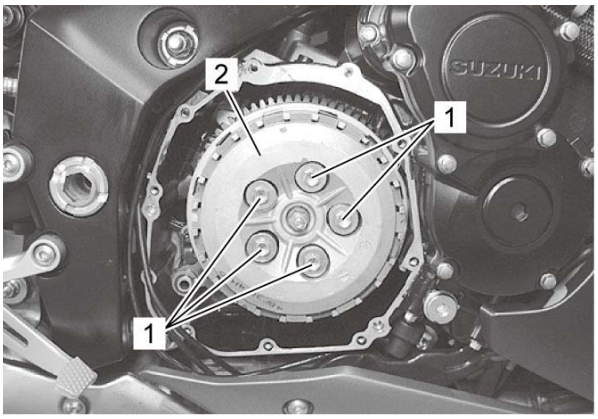

6) Remove the clutch drive plates (1) and driven plates (2).

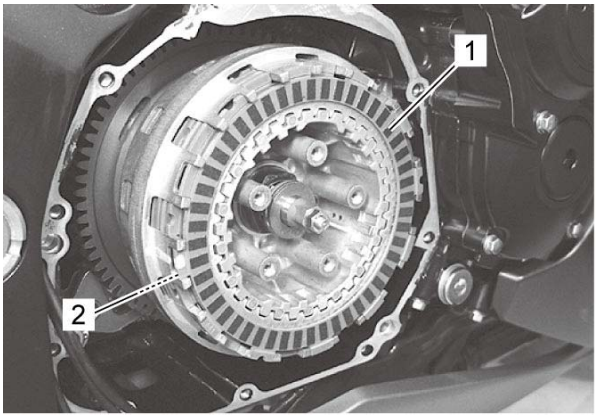

7) Remove the wave washer (1) and wave washer seat (2).

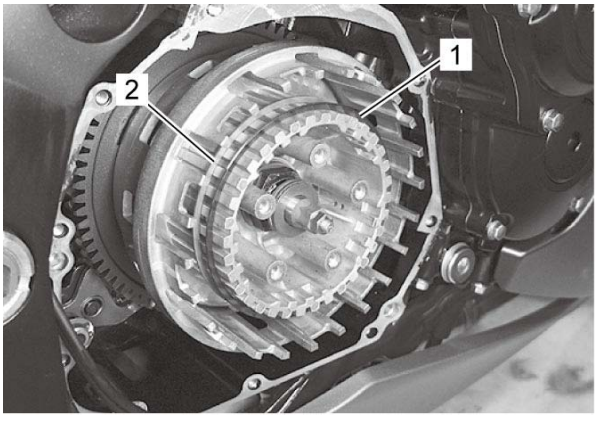

8) Remove the thrust washer (1), clutch release bearing (2) and clutch push piece (3).

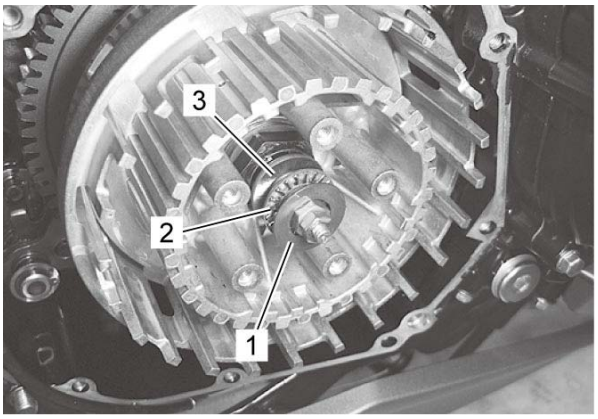

9) Remove the clutch push rod (1).

NOTE:
If it is difficult to pull out the push rod (1), use a magnetic hand or wire.

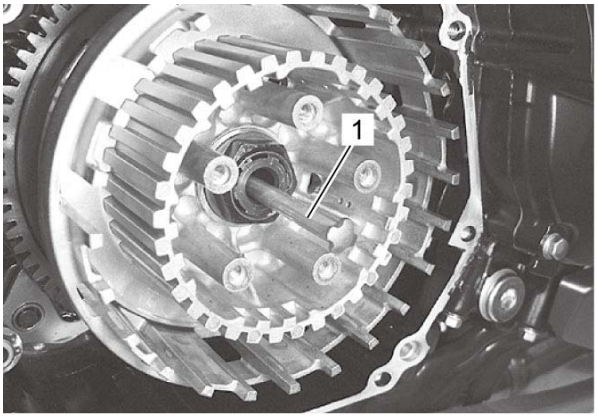

10) Unlock the clutch sleeve hub nut.

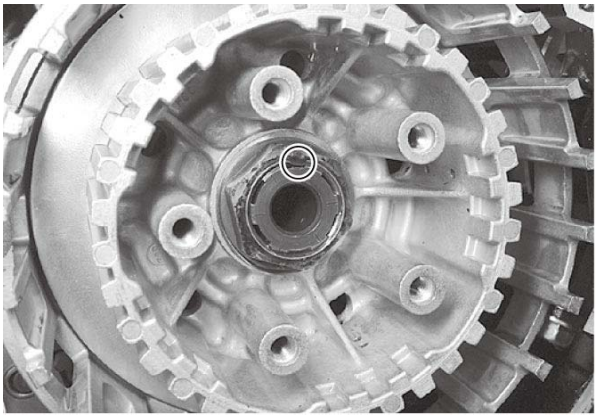

11) Hold the clutch sleeve hub with the special tools and remove the clutch sleeve hub nut (1).

Special Tool

(A): 09920–53740
(B): 09920–31020

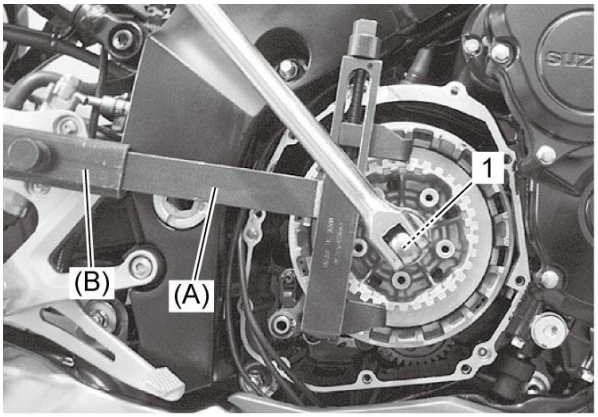

12) Remove the spring washer (1), washer (2) and clutch sleeve hub (3).

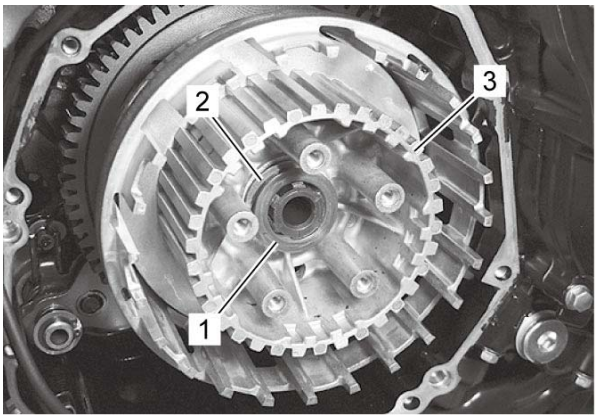

13) Remove the thrust washer (1).

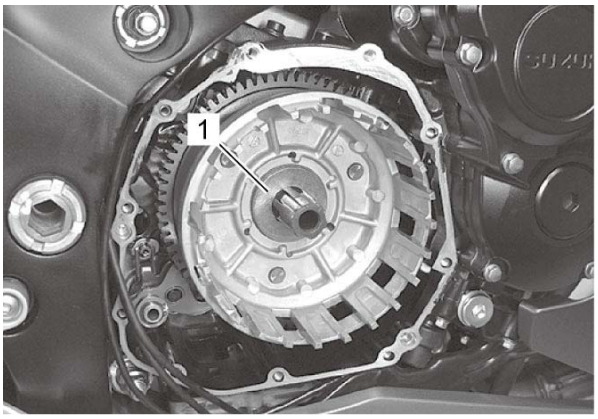

14) Remove the spacer (1) and bearing (2).

15) Remove the primary driven gear assembly (3).

NOTE:
If it is difficult to remove the primary driven gear, rotate the crankshaft.

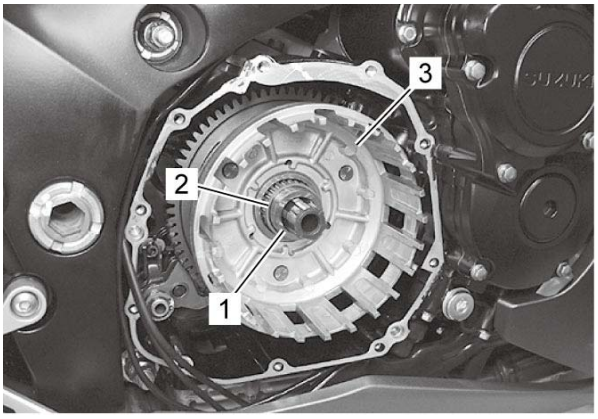

16) Remove the primary driven gear thrust washer (1).

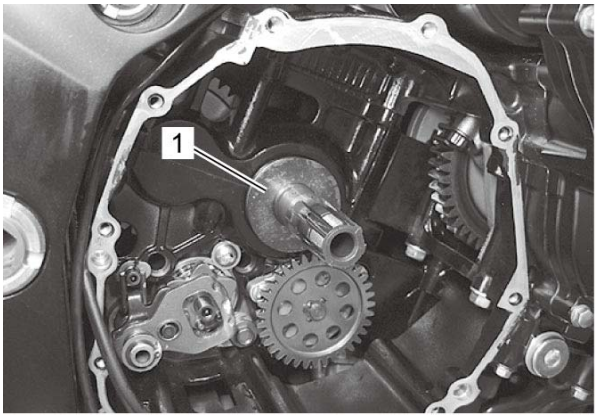

17) Remove the oil pump drive gear (1).

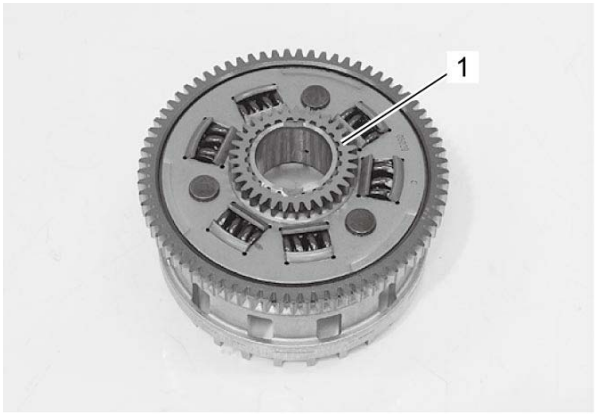

Clutch Switch Inspection

1) Disconnect the clutch switch lead wires (1).



2) Inspect the clutch switch for continuity with the circuit tester.
If any abnormality is found, replace the switch with a new one. Refer to ***Clutch Lever Removal and Installation***.

Clutch switch

Color / Position	Terminal (B/Y)	Terminal (B/W)
FREE		
•	○———	———○

3) Connect the clutch switch lead wires.

Tightening Torque Specifications

Fastening part	Tightening torque			Note
	N·m	kgf-m	lbf-ft	
Clutch release adjuster nut	5.5	0.56	4.05	☞ ☞
Clutch cable lock-nut	4.5	0.46	3.35	☞
Clutch release adjuster cap	11	1.1	8.5	☞
Clutch lever pivot nut	6.5	0.66	4.80	☞
Clutch switch screw	0.6	0.06	0.45	☞
Clutch lever holder bolt	10	1.0	7.5	☞
Clutch release arm bolt	9	0.92	6.65	☞
Clutch sleeve hub nut	150	15.3	111.0	☞
Clutch spring set bolt	10	1.0	7.5	☞
Clutch cover bolt	10	1.0	7.5	☞

Reference:
For the tightening torques of fasteners not specified in this page, refer to:
Clutch Control System Components
Clutch Components
Fasteners Information

Recommended Service Material

Material	SUZUKI recommended product or Specification		Note
Grease	SUZUKI SUPER GREASE A	P/No.: 99000–25011	☞ ☞ ☞ ☞
Sealant	SUZUKI BOND 1207B	P/No.: 99000–31140	☞

NOTE:
Required service material(s) is also described in:
Clutch Control System Components
Clutch Components

Special Tool

09900–20102	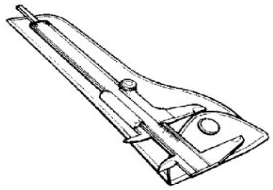	09900–20803	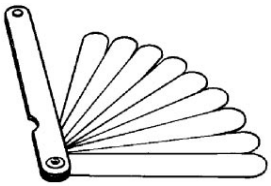
Vernier calipers (200 mm)		Thickness gauge	
☞ ☞ ☞		☞	
09920–31020	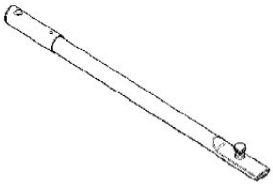	09920–53740	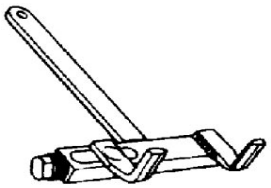
Extension handle		Clutch sleeve hub holder	
☞ ☞		☞ ☞	

Manual Transmission Symptom Diagnosis

Condition	Possible Cause	Action
Engine is noisy (Noise seems to come from the transmission)	Worn or rubbing gear.	*Replace.* ☞
	Worn countershaft spline.	*Replace countershaft.* ☞
	Worn driveshaft spline.	*Replace driveshaft.* ☞
	Worn bearing.	*Replace.* ☞
Transmission will not shift	Broken gearshift cam.	*Replace.* ☞
	Distorted gearshift fork.	*Replace.* ☞
	Worn gearshift pawl.	*Replace.* ☞
Transmission will not shift back	Broken return spring on shift shaft.	*Replace.* ☞
	Rubbing or stuck gearshift shaft.	*Repair or replace.* ☞
	Worn or distorted gearshift fork.	*Replace.* ☞
Transmission jumps out of gear	Worn shifting gears on driveshaft or countershaft.	*Replace.* ☞
	Worn or distorted gearshift fork.	*Replace.* ☞
	Weakened gearshift stopper spring.	*Replace.* ☞
	Worn gearshift cam plate.	*Replace.* ☞

Transmission Components

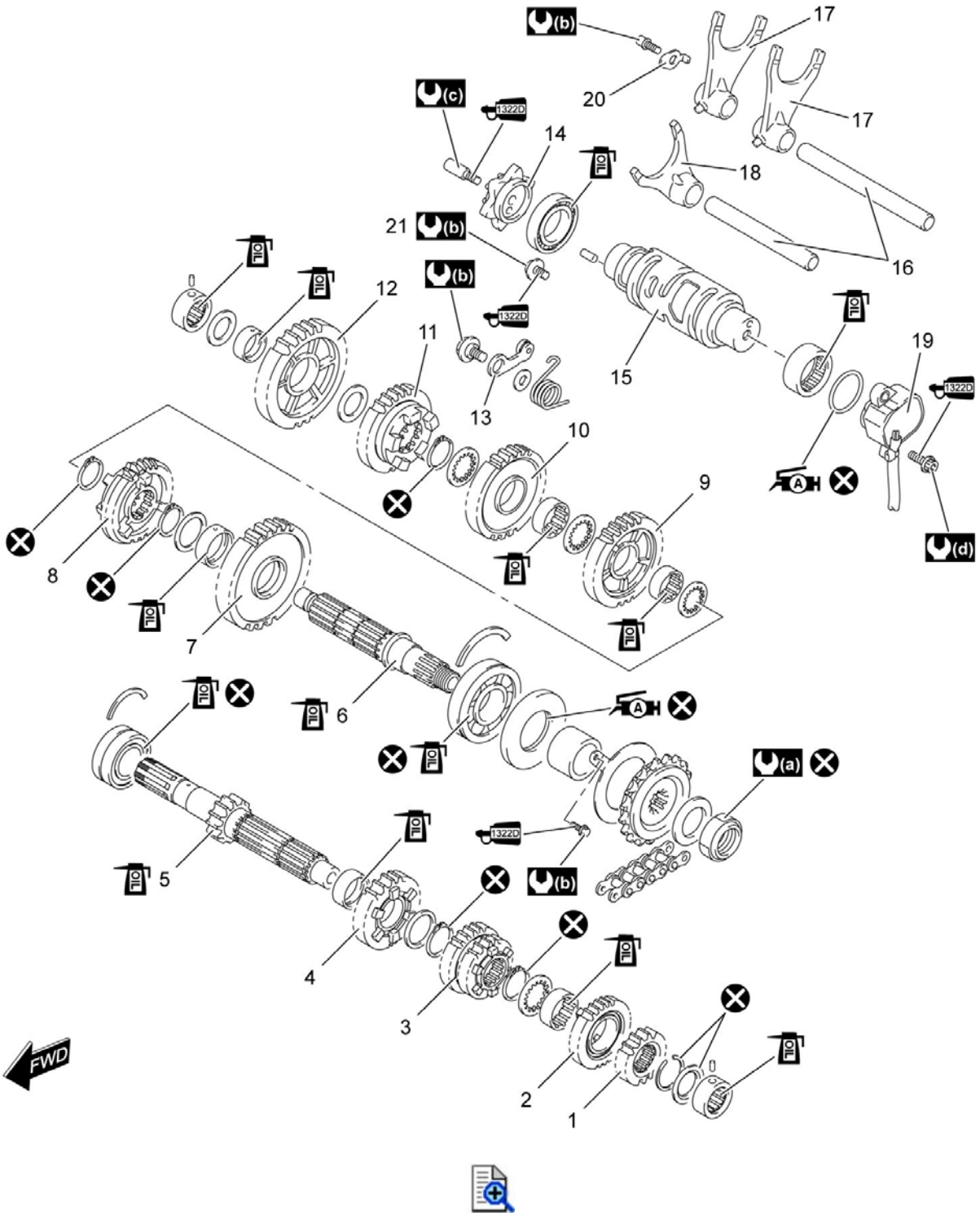

1.	2nd drive gear	11.	5th driven gear	21.	Gearshift cam bearing retainer screw
2.	6th drive gear	12.	1st driven gear	(a):	115 N·m (11.7 kgf-m, 85.0 lbf-ft)

3.	3rd/4th drive gear	13.	Gearshift cam stopper		10 N·m (1.0 kgf-m, 7.5 lbf-ft)
4.	5th drive gear	14.	Gearshift cam plate		13 N·m (1.3 kgf-m, 9.5 lbf-ft)
5.	Countershaft/1st drive gear	15.	Gearshift cam		6 N·m (0.61 kgf-m, 4.45 lbf-ft)
6.	Driveshaft	16.	Gearshift fork shaft		Apply grease.
7.	2nd driven gear	17.	Gearshift fork No. 1		Apply thread lock to the thread part.
8.	6th driven gear	18.	Gearshift fork No. 3		Apply engine oil.
9.	3rd driven gear	19.	GP switch		Do not reuse.
10.	4th driven gear	20.	Gearshift fork shaft retainer		

Transmission Construction

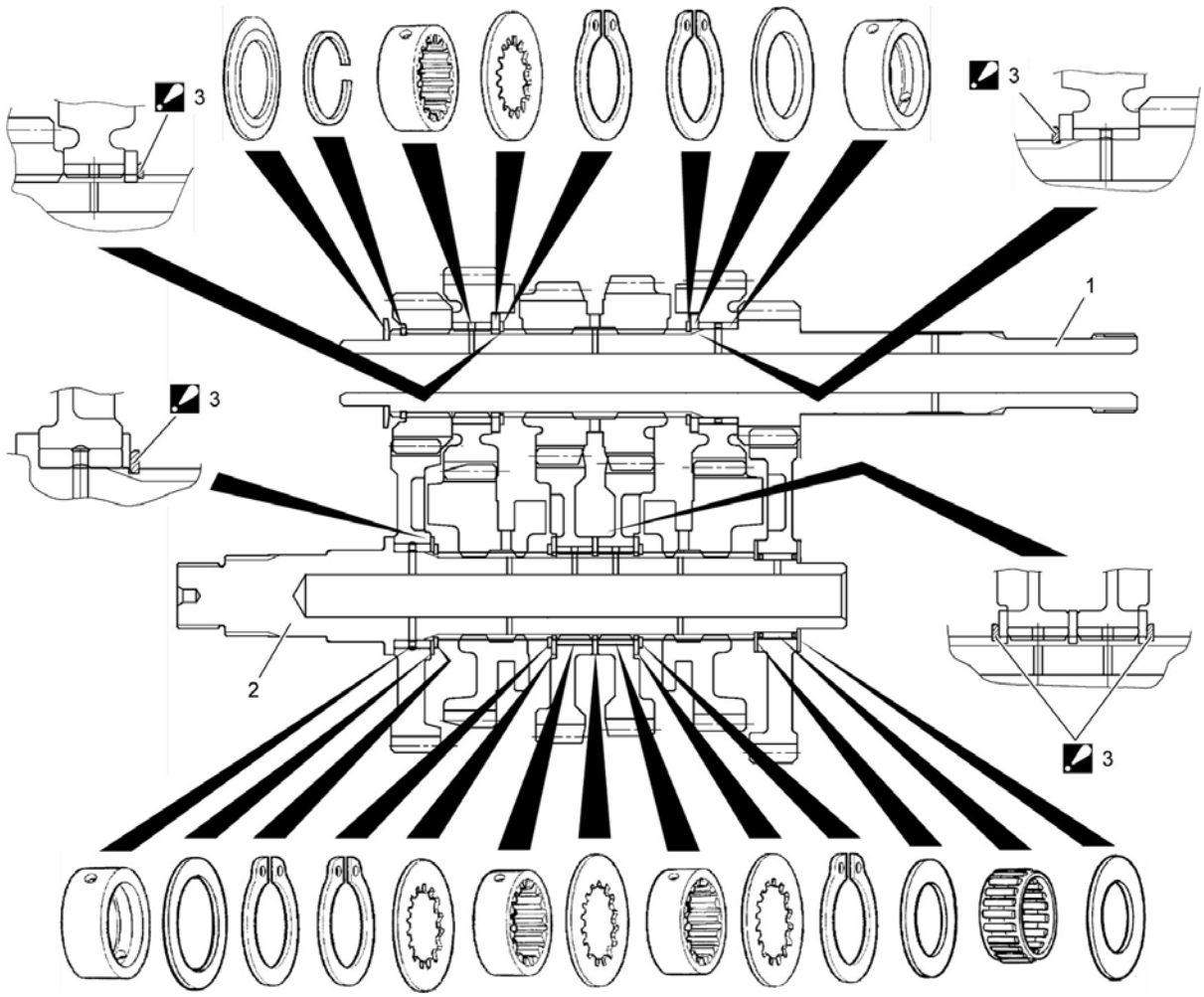

1.	Countershaft	2.	Driveshaft	3.	Snap ring : Face the sharp edge outside.

Countershaft Gear / Driveshaft Gear Disassembly and Reassembly

Refer to ***Transmission Removal and Installation***.
Reference: Transmission Components
Reference: Transmission Construction

Disassembly

⚠CAUTION:
Identify the position of each removed part. Organize the parts in their respective groups (i.e., drive or driven) so that they can be reinstalled in their original positions.

Countershaft

1) Remove the bearing (1) and oil seal (2).

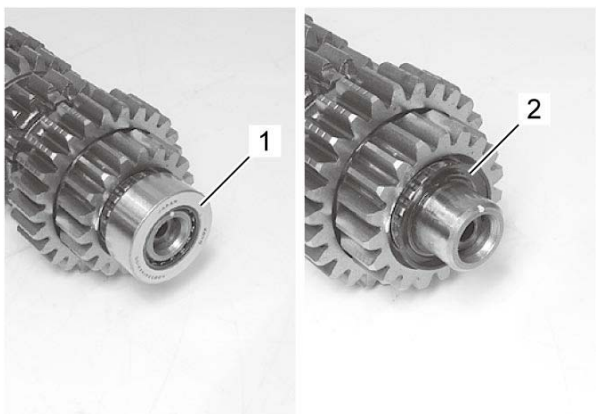

2) Remove the 6th drive gear snap ring (1) from its groove and slide it towards the 3rd/4th drive gears (2).

Special Tool
09900–06104

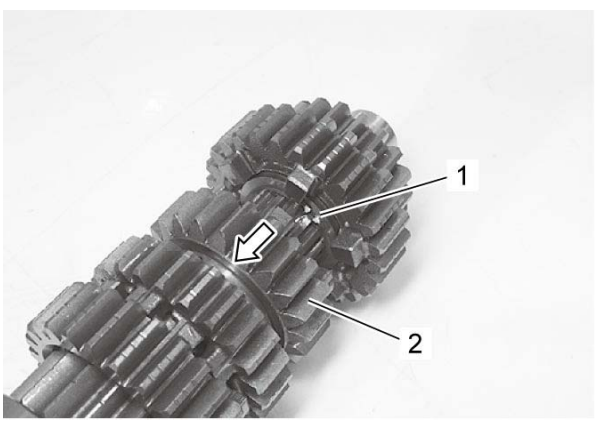

3) Slide the 6th (1) and 2nd (2) drive gears toward the 3rd/4th drive gear (3), then remove the 2nd drive gear circlip (4).

4) Remove the 2nd drive gear (2) and 6th drive gear (1).

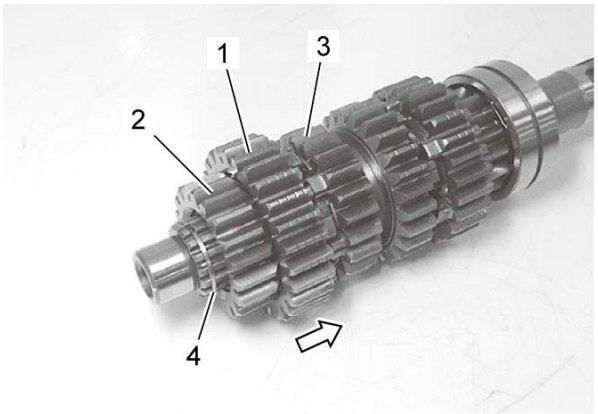

5) Remove the 6th drive gear bushing (1), washer (2) and snap ring (3).

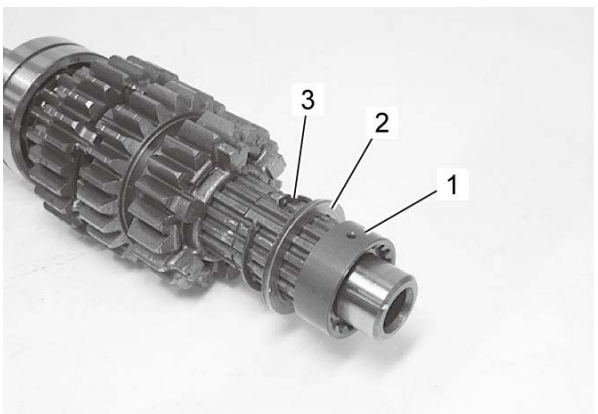

6) Remove the 3rd/4th drive gear (1).

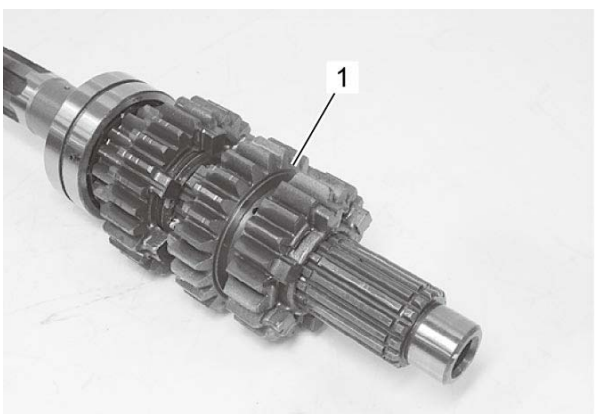

7) Remove the snap ring (1) and washer (2).

8) Remove the 5th drive gear (3) and 5th drive gear bushing (4).

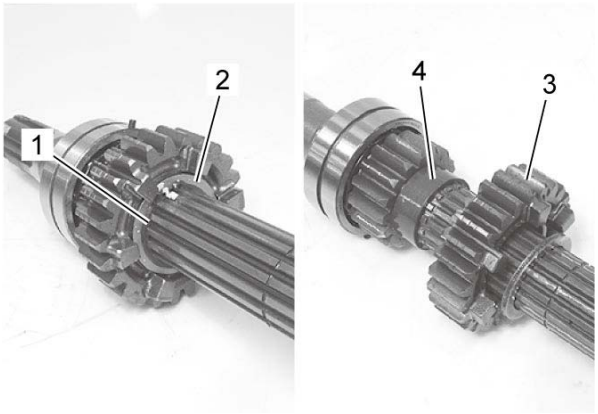

9) Remove the countershaft bearing (1) using hydraulic press.

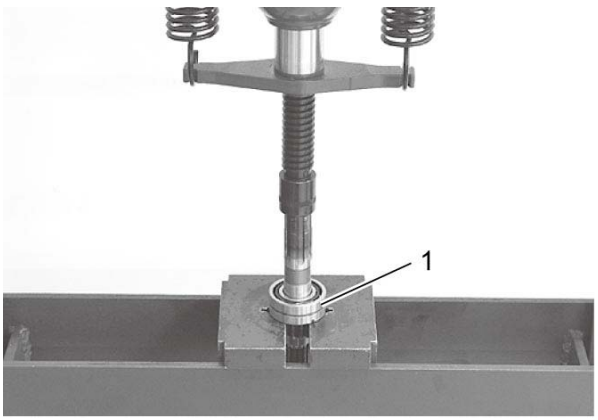

Driveshaft

1) Remove the bearing (1) and washer (2).

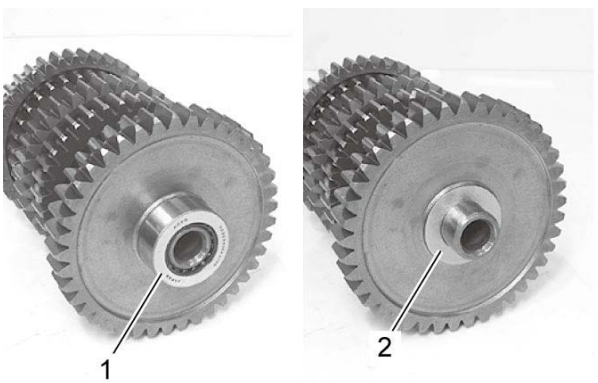

2) Remove the 1st driven gear (1) and bearing (2).

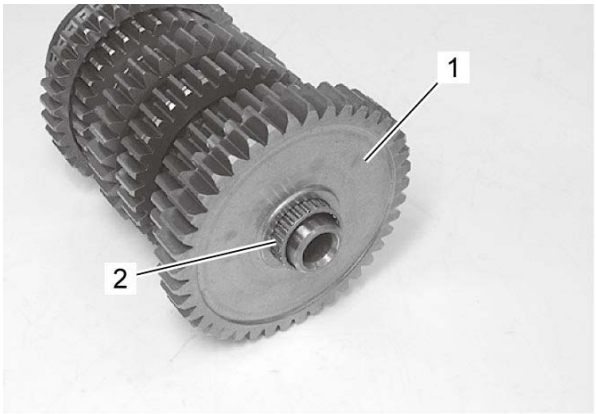

3) Remove the washer (1) and 5th driven gear (2).

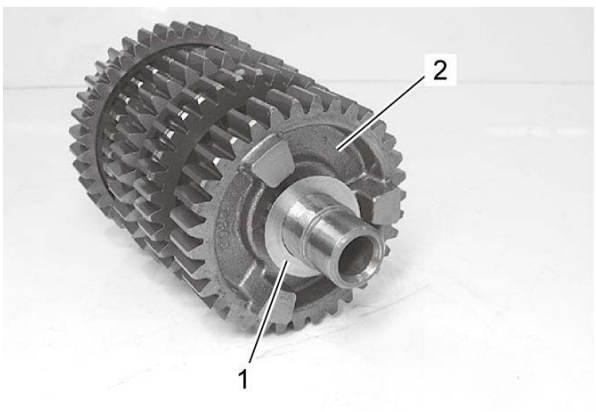

4) Remove the snap ring (1) with the special tool.

Special Tool
09900–06107

5) Remove the washer (2), 4th driven gear (3) and 4th driven gear bushing (4).

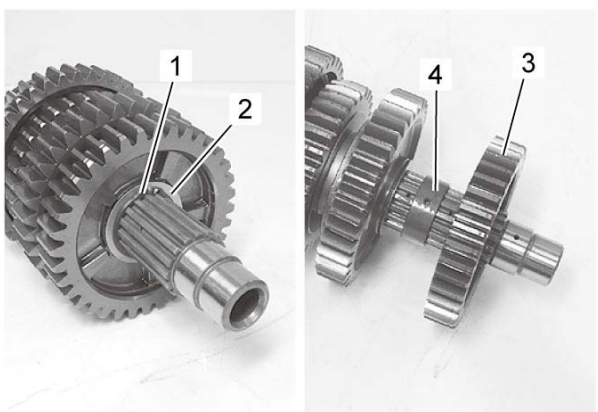

6) Remove the washer (1), 3rd driven gear (2) and 3rd driven gear bushing (3).

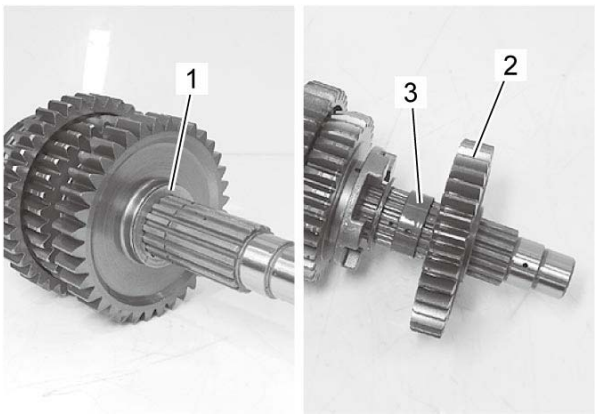

7) Remove the washer (1), snap ring (2) and 6th driven gear (3).

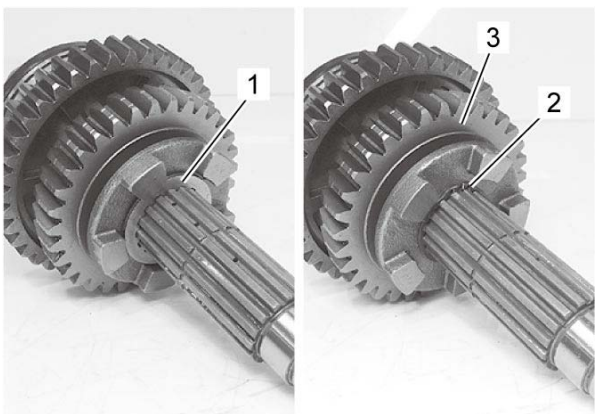

8) Remove the snap ring (1), 2nd driven gear (2) and 2nd driven gear bushing (3).

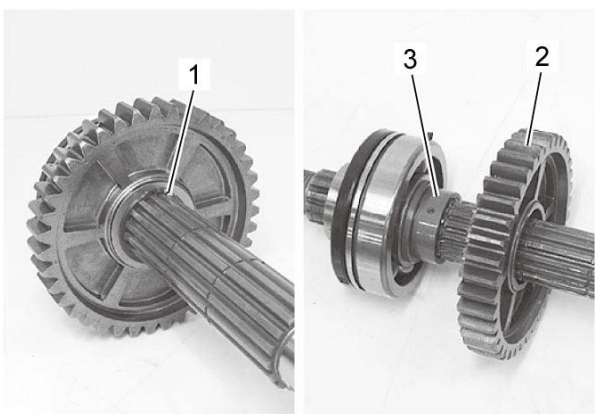

9) Remove the oil seal (1).



10) Remove the driveshaft bearing (1), engine sprocket spacer (2) using hydraulic press.

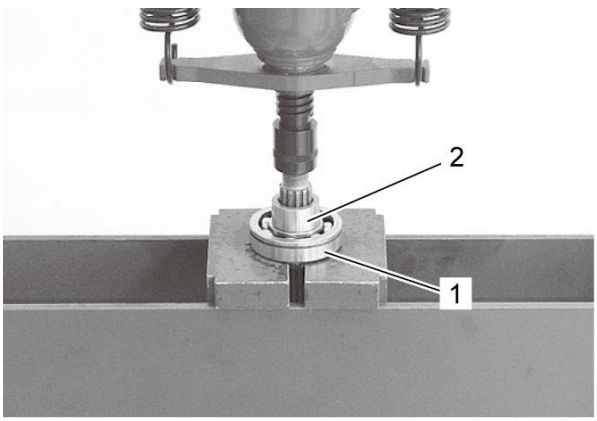

Reassembly

NOTE:

- **When reassembling the transmission gears, attention must be given to the locations and positions of washers and snap rings. The cross sectional view shows the correct position of the gears, bushings, washers and snap rings. Refer to *Transmission Construction*.**
- **When installing a new snap ring, do not expand the end gap larger than required to slip the snap ring over the shaft.**
- **After installing a snap ring, make sure that it is completely seated in the groove and securely fitted.**
- **Rotate the bearing by hand to inspect if there is any abnormal noise and for smooth rotation. Replace the bearing if there is anything unusual.**
- **Before installing the gears, apply engine oil to the driveshaft and countershaft.**

- When installing a new snap ring (1), pay attention to its direction. Fit it to the side where the thrust (2) is as shown in the figure.

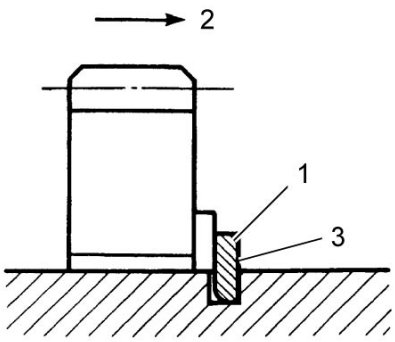

3.	Sharp edge

Driveshaft

- Install the driveshaft bearing (1) using a hydraulic press and special tool.

Special Tool
(A): 09913–70210

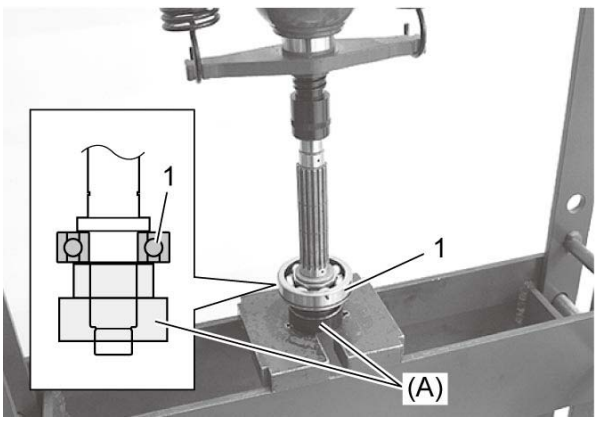

- Install the engine sprocket spacer (1) using a hydraulic press and special tool.

Special Tool
(A): 09913–70210

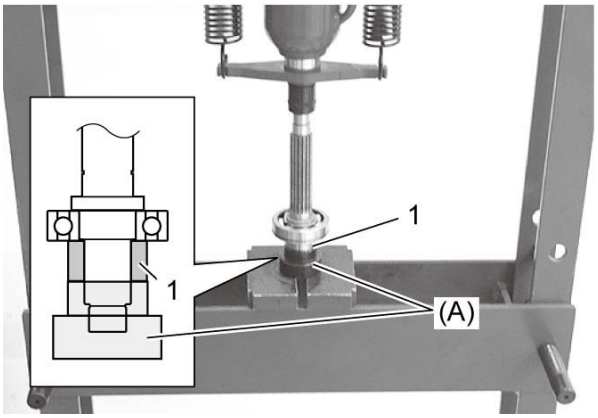

- Apply grease to the new oil seal lip.

  “A”: Grease 99000–25011 (SUZUKI SUPER GREASE A)

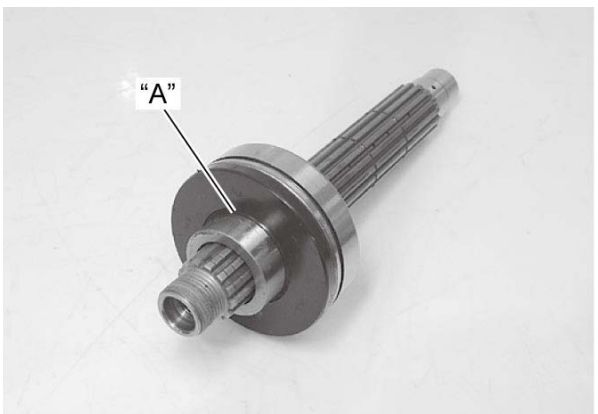

- When installing the 3rd driven gear bushing (1) onto the driveshaft, align the shaft oil hole (2) with the bushing oil hole (3).

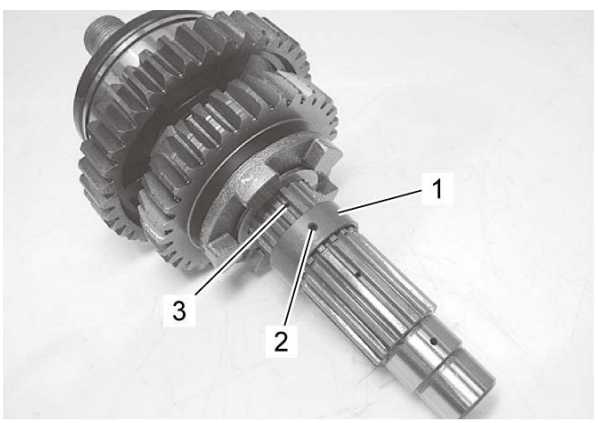

- When installing the 4th driven gear bushing (1) onto the driveshaft, align the shaft oil hole (2) with the bushing oil hole (3).

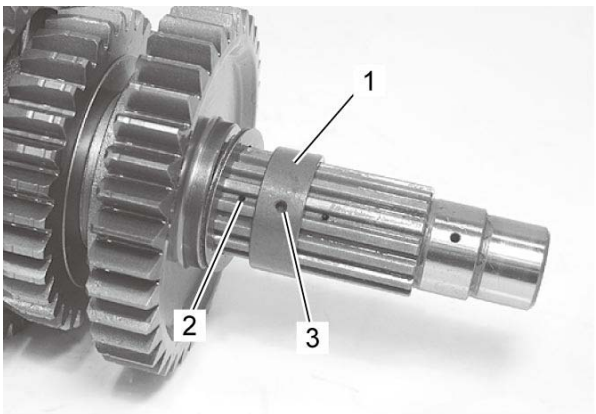

Countershaft

- Install the countershaft bearing (1) using a hydraulic press and special tool.

Special Tool
(A): 09913–70210

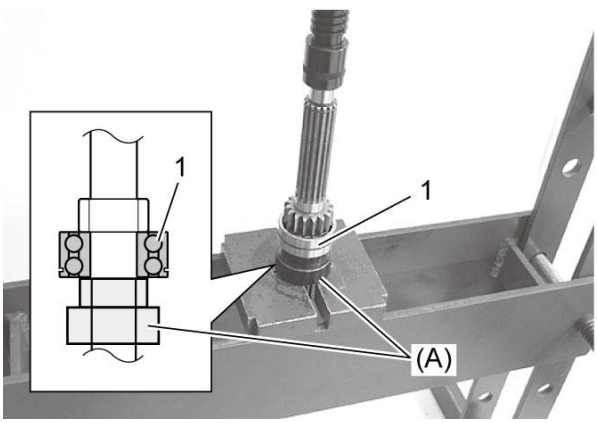

- When installing the 6th drive gear bushing (1) onto the countershaft, align the shaft oil hole (2) with the bushing oil hole (3).

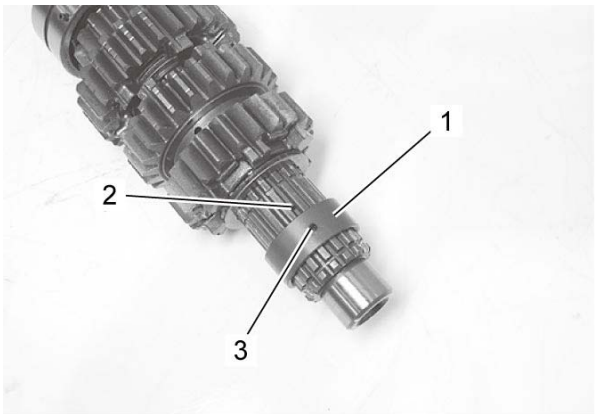

- Apply grease to the new oil seal lip (1).

  “A”: Grease 99000–25011 (SUZUKI SUPER GREASE A)

NOTE:
The oil seal (2) is directional. Install the oil seal (2) as shown in the illustration.

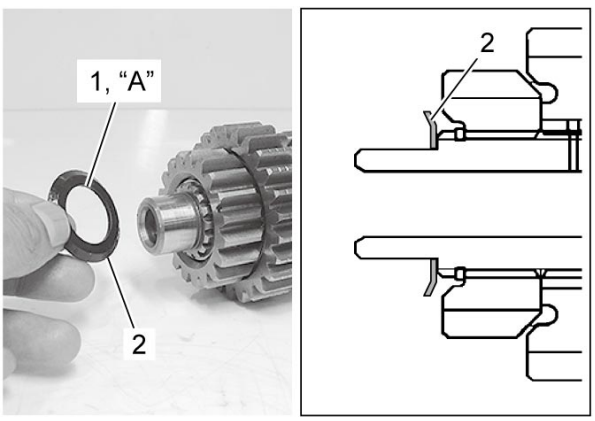

Gearshift Cam Bearing (Left) / Gearshift Bearing / Oil Seal Removal and Installation

Refer to ***Transmission Removal and Installation***.

Removal

NOTE:
If there is no abnormal condition, the oil seal and bearing removal is not necessary.

1) Remove the gearshift cam bearing (left) (1) with the special tools.

Special Tool

(A): 09923–74511
(B): 09930–30104

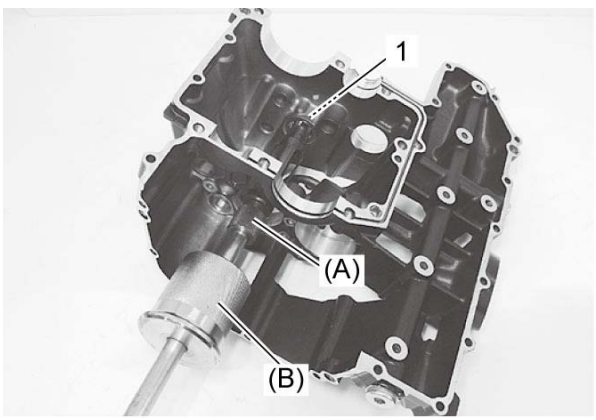

2) Remove the gearshift shaft oil seal (1) and gearshift shaft bearings (2) and (3). ☞

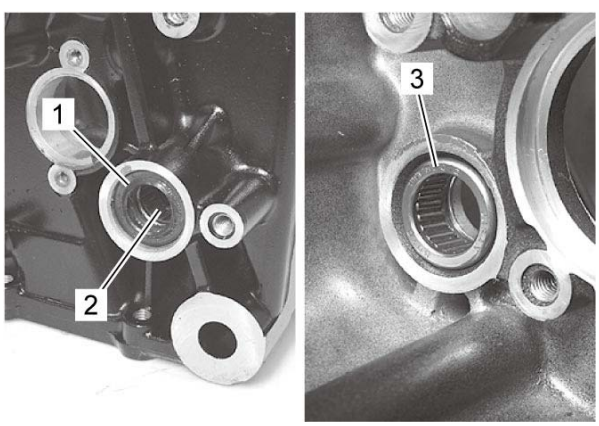

Installation

1) Install the new gearshift shaft bearings and new gearshift shaft oil seal. ☞

2) Install the new gearshift cam bearing (1) with the special tool.

NOTE:
The stamped mark side of the gearshift cam bearing faces gearshift cam side.

Special Tool

(A): 09913–70210

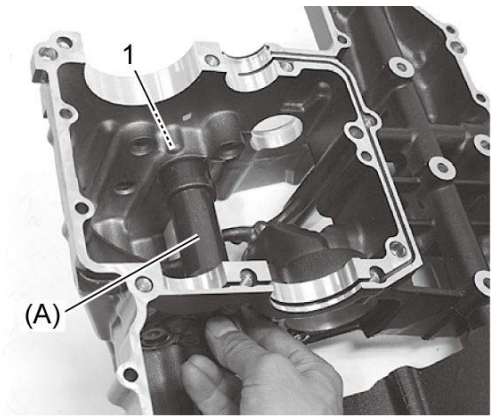

Gearshift Fork / Gearshift Cam Inspection

Refer to ***Transmission Removal and Installation*** and ***Countershaft Gear / Driveshaft Gear Disassembly and Reassembly***.

Gearshift Fork to Groove Clearance

NOTE:
The clearance for each gearshift fork plays an important role in the smoothness and positiveness of the shifting action.

Using the thickness gauge, check the gearshift fork clearance in the groove of its gear.
If the clearance checked is noted to exceed the limit specified, replace the fork or its gear, or both.

Special Tool

(A): 09900–20803

Gearshift fork to groove clearance

[Standard]: 0.1 – 0.3 mm (0.004 – 0.011 in)
[Limit]: 0.5 mm (0.019 in)

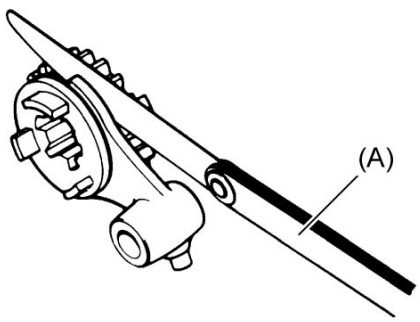

Gearshift Fork Groove Width

Measure the gearshift fork groove width using the vernier calipers.

Special Tool

(A): 09900–20102

Gearshift fork groove width

[Standard]: 5.0 – 5.1 mm (0.197 – 0.200 in)

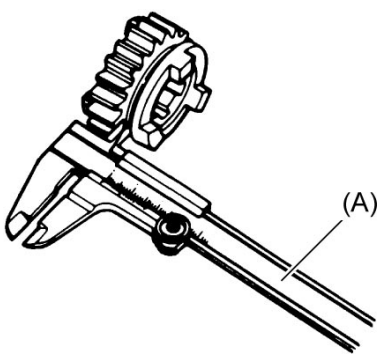

Gearshift Fork Thickness

Measure the gearshift fork thickness using the vernier calipers.

Special Tool

(A): 09900–20102

Gearshift fork thickness

[Standard]: 4.8 – 4.9 mm (0.189 – 0.192 in)

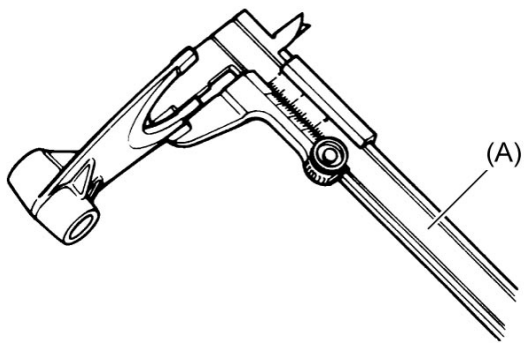

Gearshift Cam

Inspect the gearshift cam groove for abnormal wear and damage. If any defects are found, replace the gearshift cam with a new one.



Gearshift Cam Bearing

Inspect the gearshift cam bearings, left and right for abnormal noise and smooth rotation.
Replace the bearing if there is anything unusual. Refer to ***Gearshift Cam Bearing (Left) / Gearshift Bearing / Oil Seal Removal and Installation***.





Gearshift Lever Construction

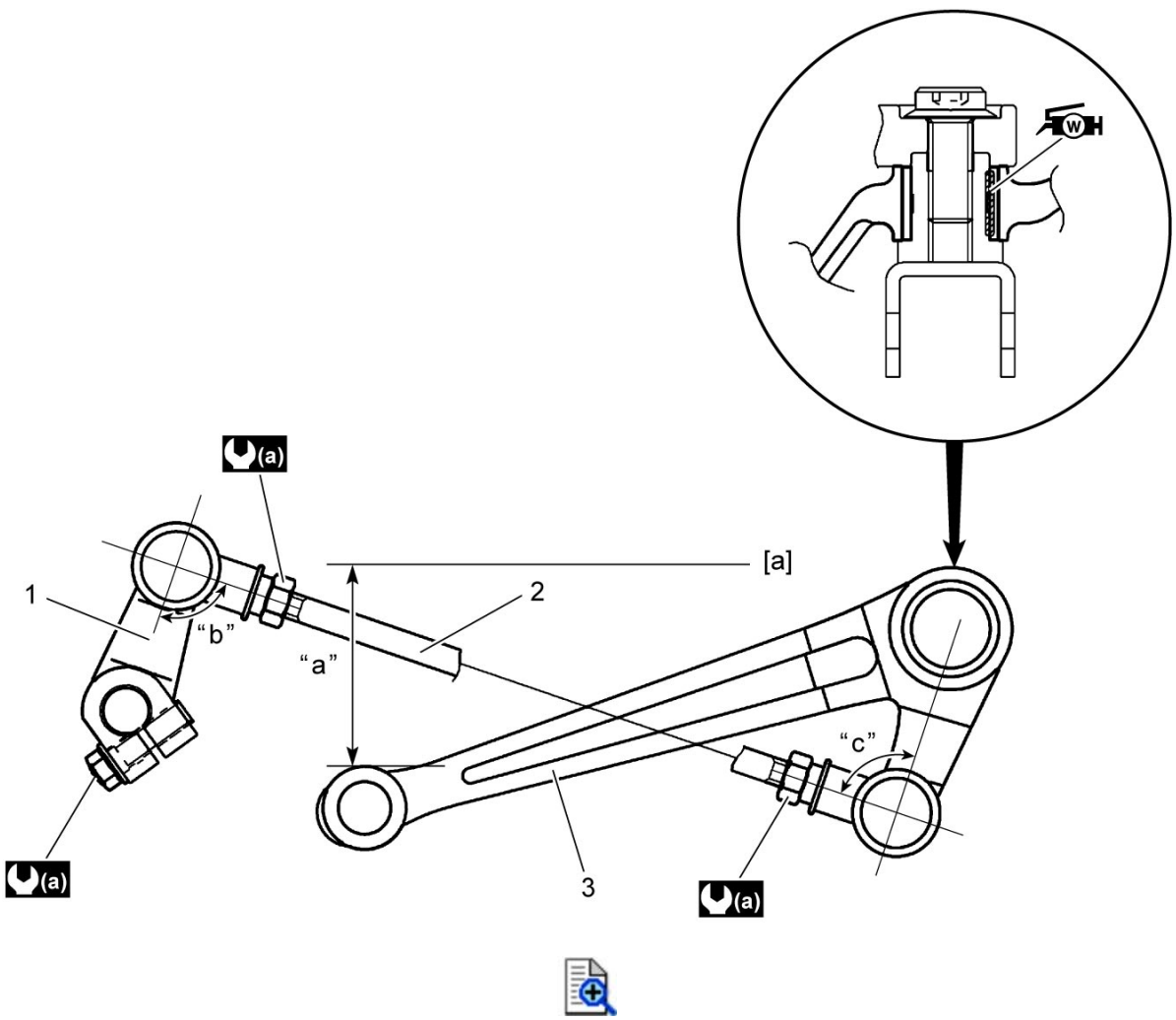

[a]:	Footrest top surface	3.	Gearshift lever	"c":	87.5°
1.	Gearshift link arm	"a":	45 – 55 mm (1.8 – 2.1 in)	(a):	10 N·m (1.0 kgf-m, 7.5 lbf-ft)
2.	Gearshift link rod	"b":	90°	(W):	Apply grease.

Gearshift Lever Height Inspection and Adjustment

Inspection

Inspect the gearshift lever height “a” between the pedal top face and footrest.

Gearshift lever height

[Standard]: 45 – 55 mm (1.8 – 2.1 in)

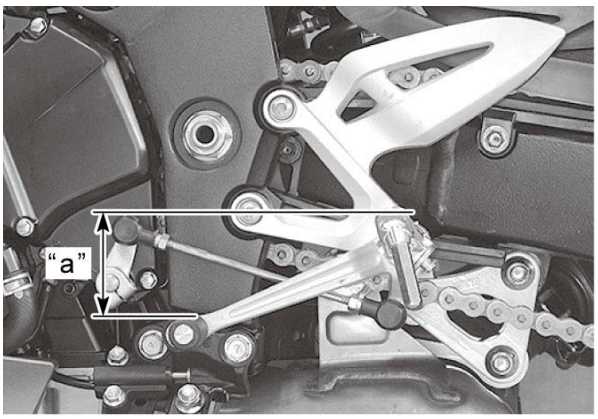

Adjustment

1) Loosen the lock-nuts (1).

2) Turn the gearshift link rod (2) until the gearshift lever height is within the specification.

Gearshift lever height

[Standard]: 45 – 55 mm (1.8 – 2.1 in)

3) Tighten the lock-nuts (1) to the specified torque.

Tightening torque

Gearshift link rod nut (a): 10 N·m (1.0 kgf-m, 7.5 lbf-ft)

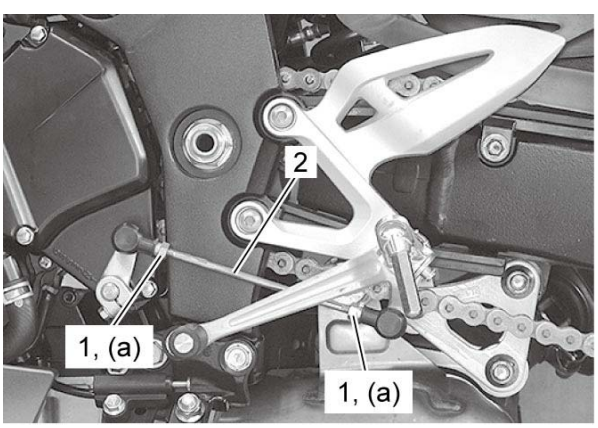

Gearshift Lever Removal and Installation

Refer to ***Gearshift Lever Construction***.

Removal

Remove the gearshift lever.

Installation

1) Install the gearshift lever.

2) After installing the gearshift lever, check the gearshift lever height. ☞

Gearshift Linkage Inspection

Refer to ***Gearshift Shaft / Gearshift Cam Plate Removal and Installation***.

Gearshift Shaft

Check the gearshift shaft (1) for bend or wear.
Check the return spring (2) for damage or fatigue.
If any defects are found, replace the defective part(-s).



Gearshift Shaft Oil Seal

Inspect the gearshift shaft oil seal lip (1) for damage or wear. If any defect is found, replace the oil seal with a new one.

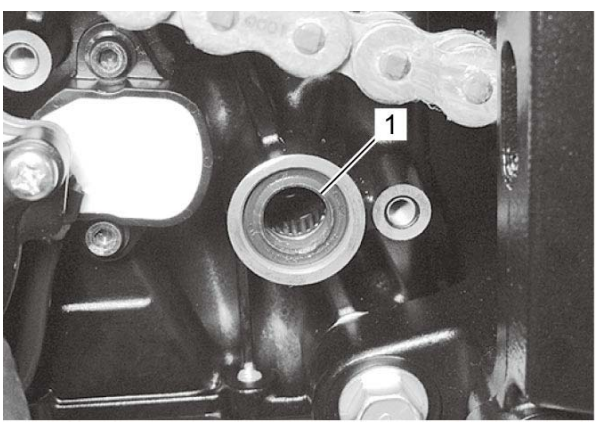

Gearshift Shaft Bearing

Inspect the gearshift shaft bearings (1) for abnormal noise and smooth rotation. Replace the bearing if there is anything unusual.

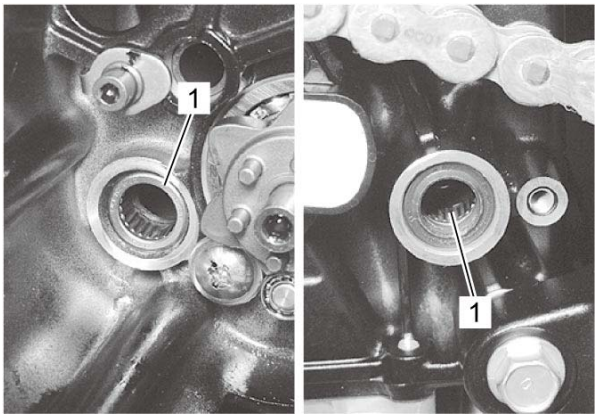
1
1

Gearshift Shaft / Gearshift Cam Plate Components

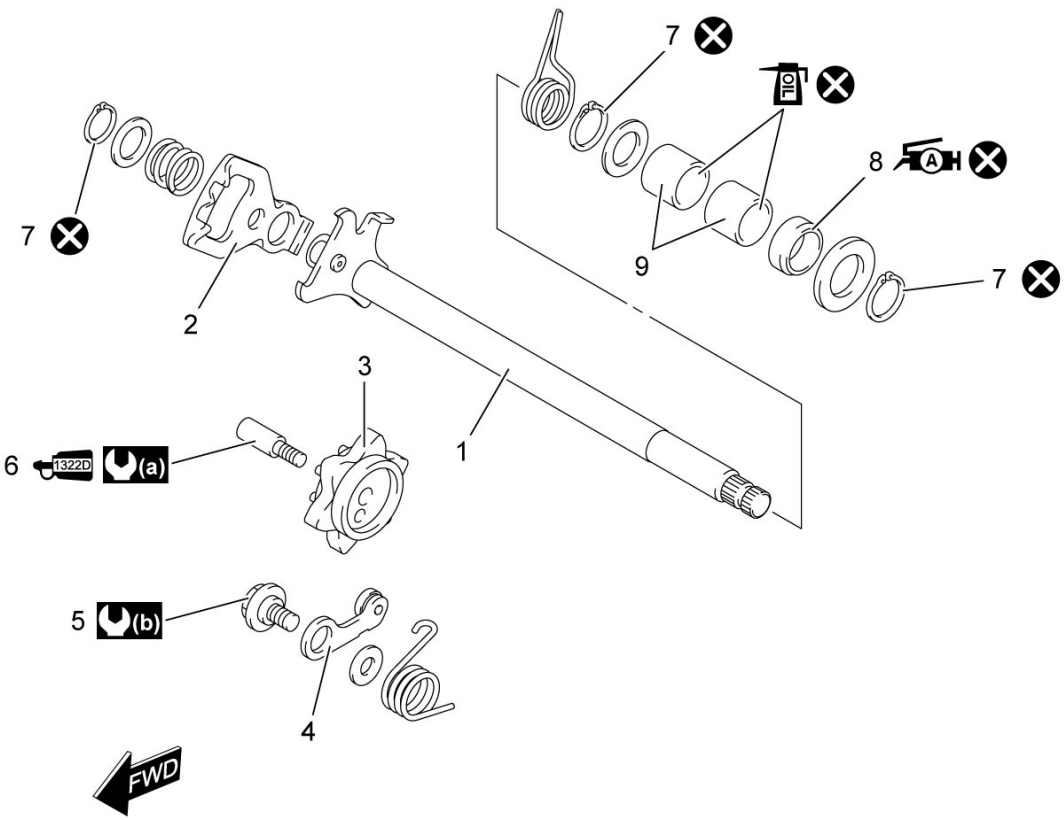

1.	Gearshift shaft	5.	Gearshift cam stopper bolt	9.	Gearshift shaft bearing	1322D :	Apply thread lock to the thread part.
2.	Gearshift cam drive plate	6.	Gearshift cam plate bolt	(a) :	13 N·m (1.3 kgf-m, 9.5 lbf-ft)	OIL :	Apply engine oil.
3.	Gearshift cam plate	7.	Snap ring	(b) :	10 N·m (1.0 kgf-m, 7.5 lbf-ft)	:	Do not reuse.
4.	Gearshift cam stopper	8.	Gearshift shaft oil seal	A :	Apply grease.		

Transmission Removal and Installation

Removal

1) Remove the engine assembly. ☞

2) Separate the middle and lower crankcases. ☞

3) Remove the driveshaft assembly (1), countershaft assembly (2) and clutch push rod oil seal (3).

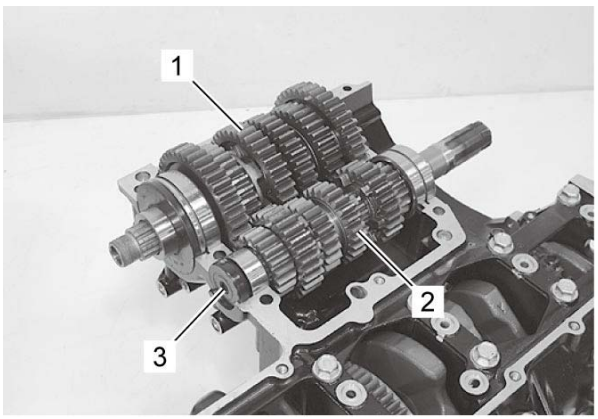

4) Remove the bearing pins (1) and C-rings (2).

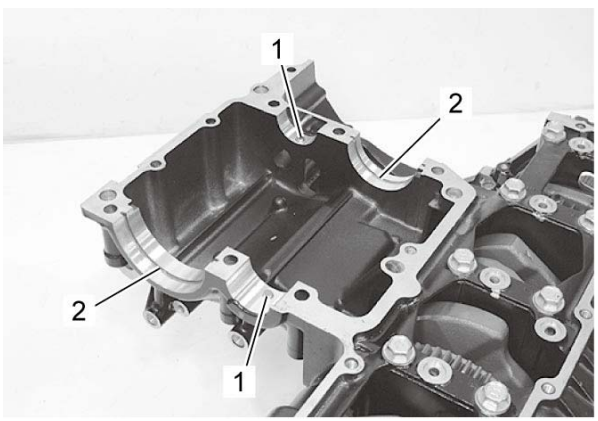

5) Remove the gearshift shaft assembly (1), gearshift cam stopper (2) and gearshift cam plate (3). ☞

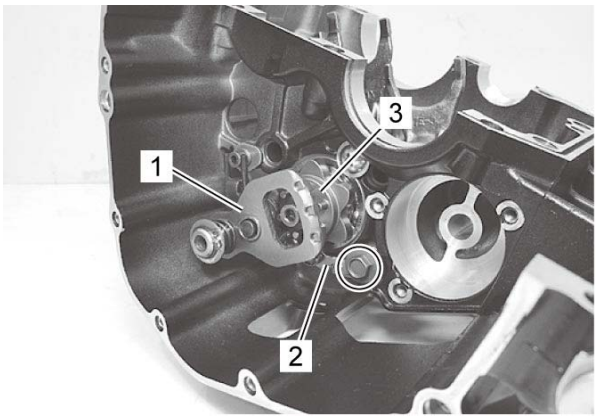

6) Remove the gearshift cam bearing retainer screws (1).
7) Remove the gearshift fork shaft retainer (2).

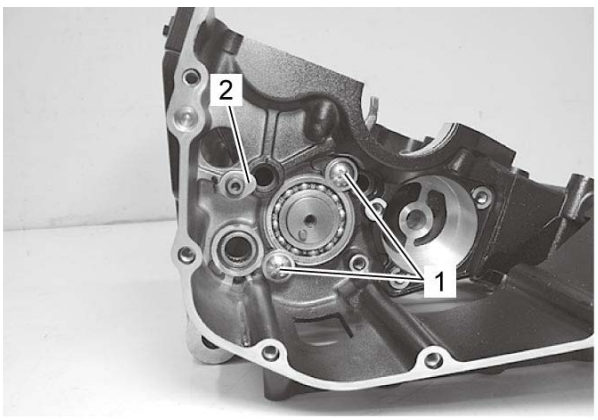

8) Remove the gearshift fork shafts (1) and gearshift forks (2).
9) Remove the gearshift cam (3) and bearing (4).

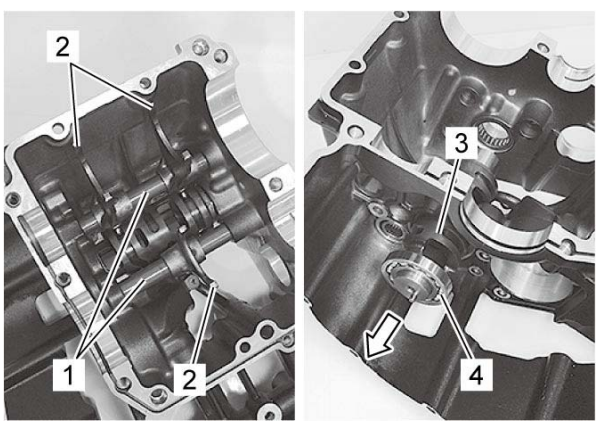

Installation

Reference: Gearshift Fork / Gearshift Cam Inspection

1) Install the gearshift cam (1) with the bearing (2) fitted.

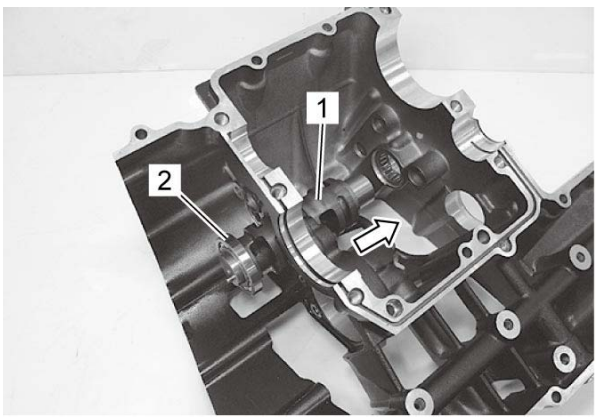

2) Install the gearshift forks No. 1 (1) and No. 3 (2).

NOTE:
The gearshift forks No. 1 (1) are same parts.

3) With engaging each fork end to the cam groove, insert the fork shaft.

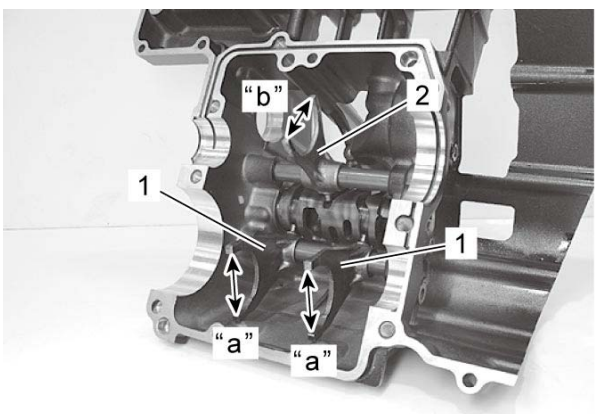

"a":	40 mm (0.6 in)	"b":	36 mm (1.4 in)

4) Apply thread lock to the gearshift cam bearing retainer screws (1) and tighten them to the specified torque.

"A": Thread lock cement 99000–32150 (THREAD LOCK CEMENT 1322D)

Tightening torque

Gearshift cam bearing retainer screw (a): 10 N·m (1.0 kgf-m, 7.5 lbf-ft)

5) Install the gearshift fork retainer (2) and tighten the gearshift arm stopper (3) to the specified torque.

Tightening torque

Gearshift arm stopper (b): 10 N·m (1.0 kgf-m, 7.5 lbf-ft)

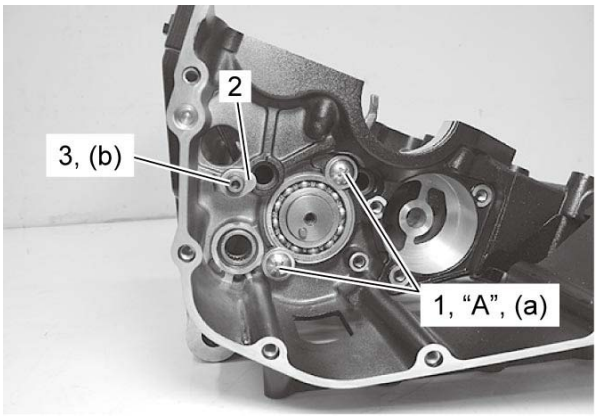

6) Install the gearshift cam plate, gearshift cam stopper and gearshift shaft. ☞

7) Install the C-rings (1) and bearing pins (2).

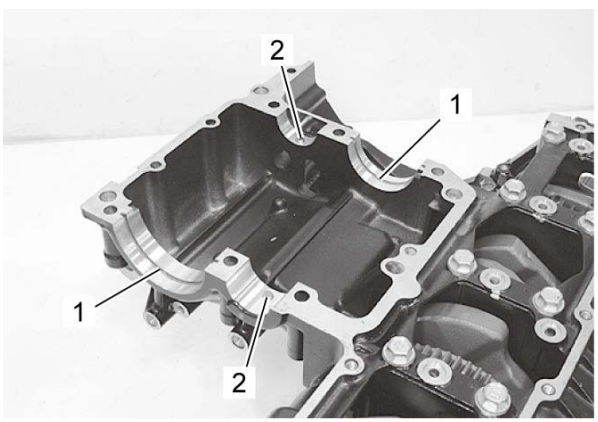

8) Install the countershaft assembly.

NOTE:
Align the C-ring (1) with the groove (2) of bearing and the bearing pin (3) with the indent (4) on the bearing.

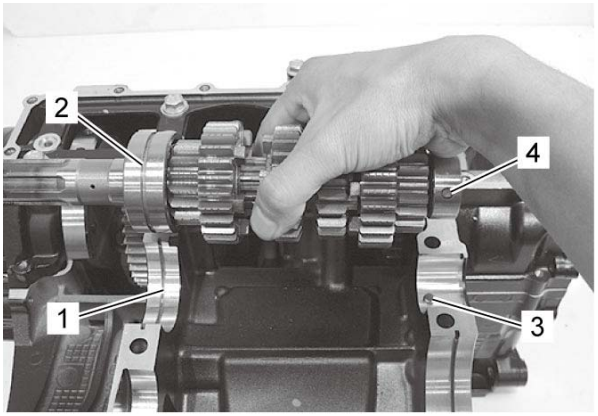

9) Install the driveshaft assembly.

NOTE:
Align the C-ring (1) with the groove (2) of bearing and the bearing pin (3) with the indent (4) on the bearing.

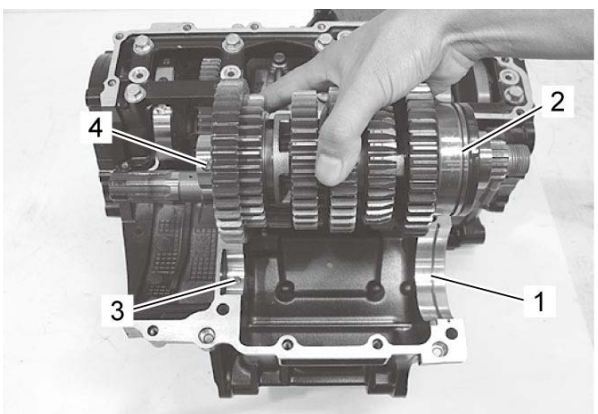

10) Turn the bearings and set the bearing dowel pins (1) in each position.

11) Install the new clutch push rod cap seal (2).

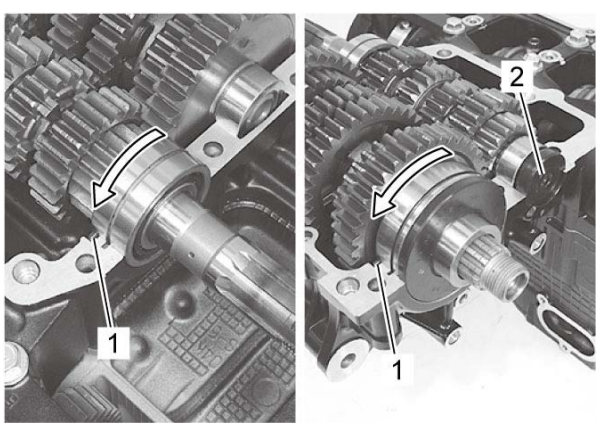

12) Reassemble the middle and lower crankcases. ☞

Gearshift Shaft / Gearshift Cam Plate Removal and Installation

Reference: Gearshift Shaft / Gearshift Cam Plate Components
Reference: Gearshift Shaft Construction

Removal

1) Remove the engine sprocket cover. ☞

2) Remove the clutch components. ☞

3) Remove the snap ring (1) and washer (2) from the gearshift shaft.

Special Tool
09900–06107

4) Remove the gearshift shaft assembly (3).

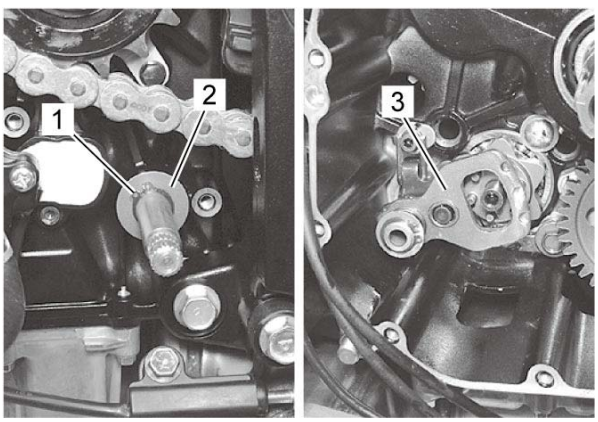

5) Remove the following parts from the gearshift shaft (1).
- Washer (2)
- Snap ring (3)
- Gearshift plate return spring (4)
- Gearshift cam drive plate (5)
- Gearshift shaft return spring (6)

Special Tool
09900–06107

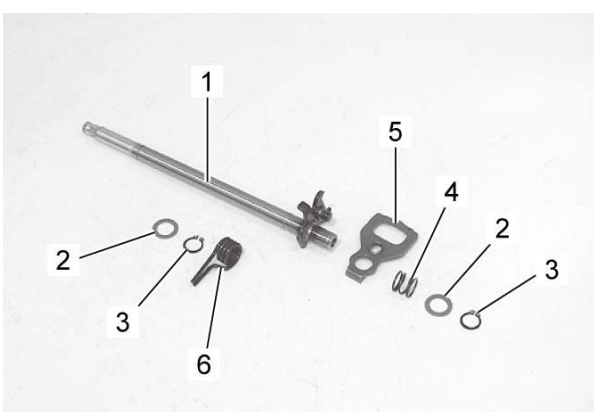

6) Remove the oil pump. ☞
7) Remove the gearshift cam plate bolt (1) and gearshift cam plate (2).
8) Remove the gearshift cam stopper (3).

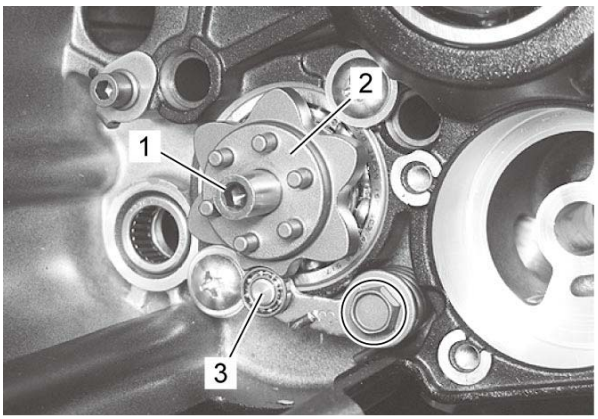

Installation

Reference: Gearshift Linkage Inspection
Refer to ***Gearshift Shaft Construction***.
1) Assemble the gearshift cam stopper (1), bolt (2), washer (3) and return spring (4).
2) Tighten the gearshift cam stopper bolt (2) to the specified torque.

NOTE:
Hook the return spring end (5) to the stopper.

Tightening torque
Gearshift cam stopper bolt (a): 10 N·m (1.0 kgf-m, 7.5 lbf-ft)



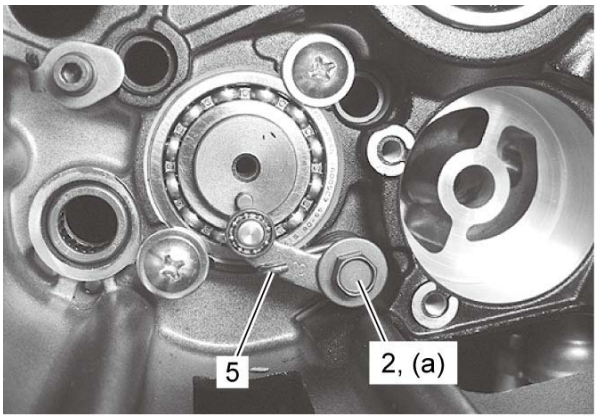

3) Check the gearshift cam stopper moves smoothly.
4) Locate the gearshift cam in the neutral position.
5) Install the gearshift cam plate (1).

NOTE:
Align the gearshift cam pin (2) with the gearshift cam plate hole (3).

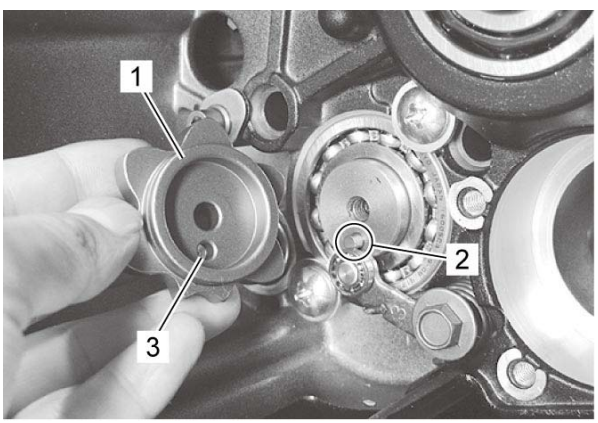

6) Apply a small quantity of thread lock to the gearshift cam plate bolt (1) and tighten it to the specified torque.

"A": Thread lock cement 99000–32150 (THREAD LOCK CEMENT 1322D)

Tightening torque

Gearshift cam plate bolt (a): 13 N·m (1.3 kgf-m, 9.5 lbf-ft)

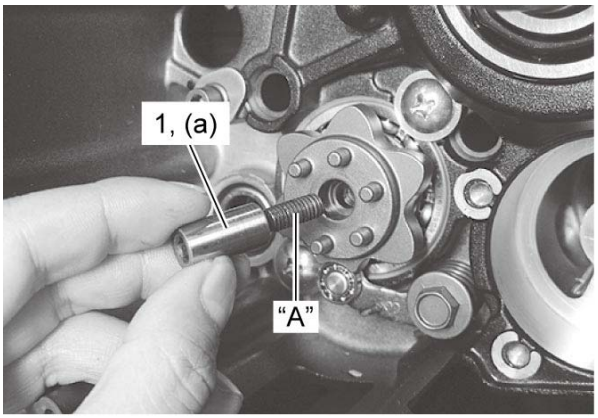

7) Install the oil pump. ☞

8) Install the gearshift shaft return spring (1).

NOTE:
Position the stopper (2) of gearshift arm between the shaft return spring ends (3).

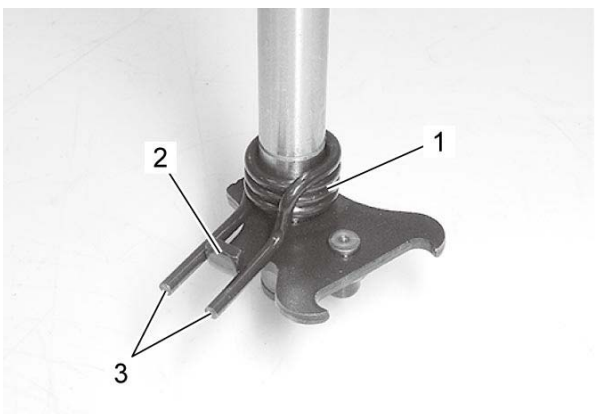

9) Install the following parts.
- New snap ring (1)
- Gearshift cam drive plate (2)
- Gearshift plate return spring (3)
- Washer (4)

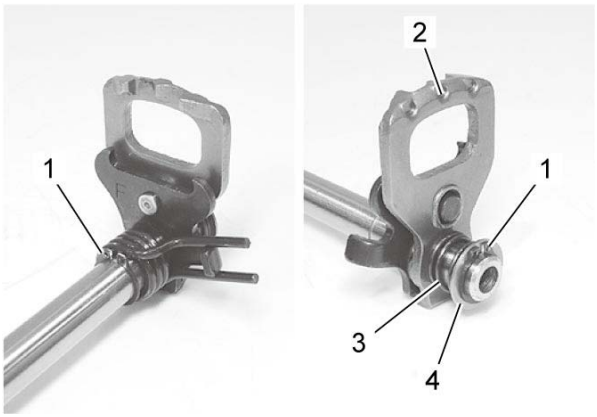

10) Install the washer (1) and gearshift shaft assembly (2).

NOTE:
Pinch the gearshift arm stopper (3) with return spring ends (4).

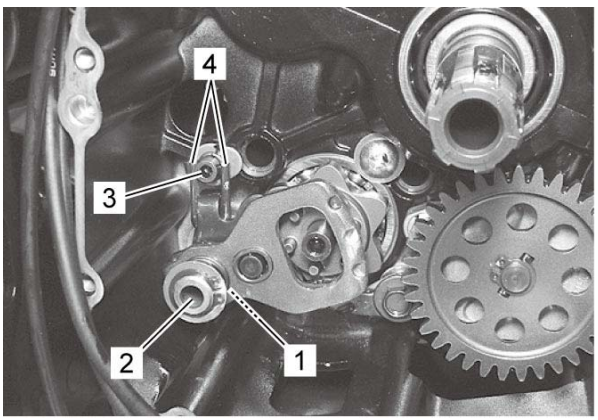

11) Install the washer (1) and new snap ring (2).

Special Tool
09900–06107

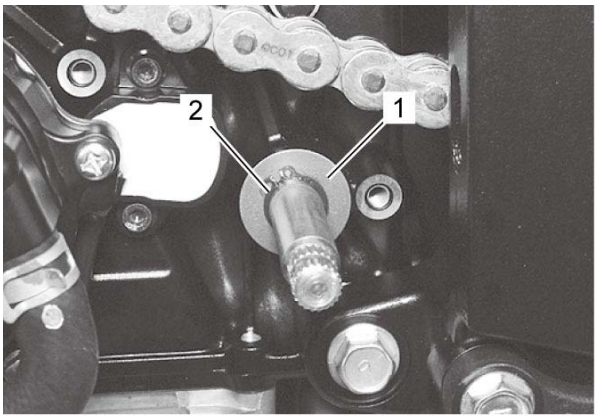

12) Install the clutch components. ☞

13) Install the engine sprocket cover. ☞

14) After installing the gearshift lever, check the gearshift lever height. ☞

Gearshift Shaft Construction

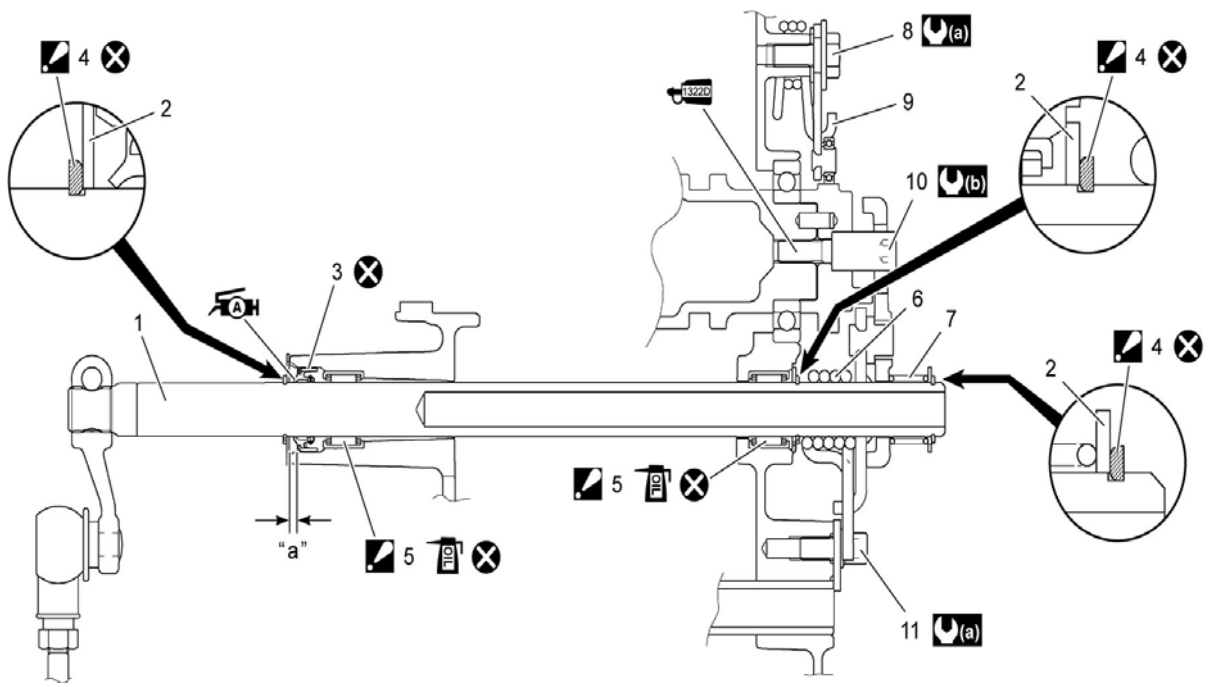

1.	Gearshift shaft	10.	Gearshift cam plate bolt
2.	Washer	11.	Gearshift arm stopper
3.	Gearshift shaft oil seal	"a":	1.5 – 2.5 mm (0.059 – 0.098 in)
4.	Snap ring : Face the sharp edge outside.	(a):	10 N·m (1.0 kgf-m, 7.5 lbf-ft)
5.	Gearshift shaft bearing : Face the stamped mark side faces outside.	(b):	13 N·m (1.3 kgf-m, 9.5 lbf-ft)
6.	Gearshift shaft return spring	:	Apply grease.
7.	Gearshift plate return spring	1322D:	Apply thread lock to the thread part.
8.	Gearshift cam stopper bolt	OIL:	Apply engine oil.
9.	Gearshift cam stopper arm spring	:	Do not reuse.

Gearshift Shaft Oil Seal / Bearing Removal and Installation

Removal

1) Remove the gearshift shaft. Refer to ***Gearshift Shaft / Gearshift Cam Plate Removal and Installation***.
2) Remove the gearshift shaft oil seal (1).

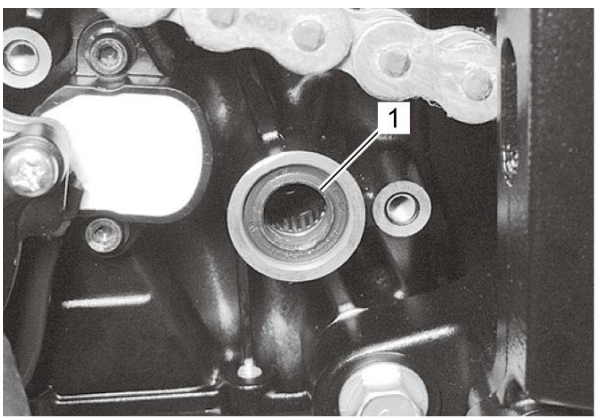

3) Remove the bearings (1) and (2) with the special tools.

Special Tool

(A): 09921–20210
(B): 09930–30104

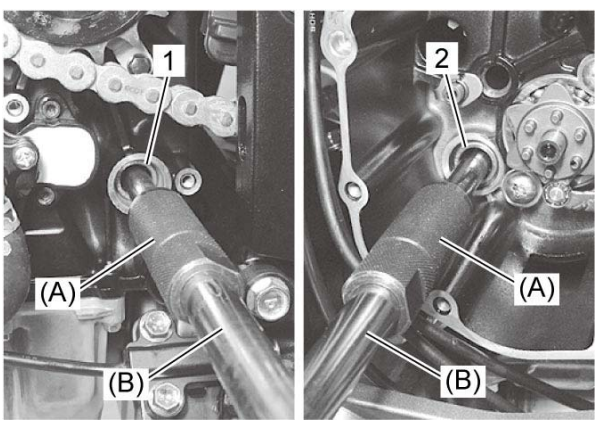

Installation

Reference: Gearshift Linkage Inspection

Install the oil seal and bearing in the reverse order of removal. Pay attention to the following points:

- Install the new bearings (1) with the special tool.

NOTE:
The stamped mark side of gearshift shaft bearing faces outside.

Special Tool
(A): 09913–70210

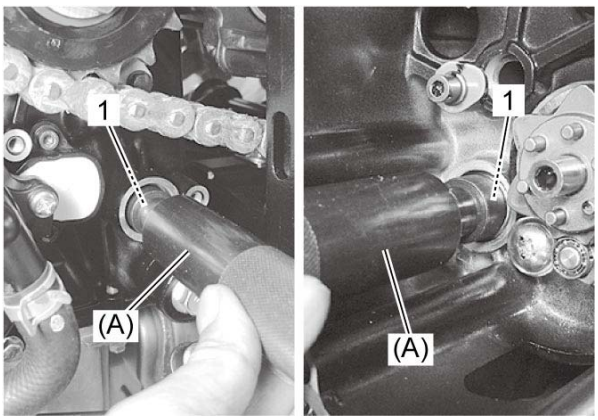

- Install the new oil seal (1) with the special tool.

Special Tool
(A): 09913–70210

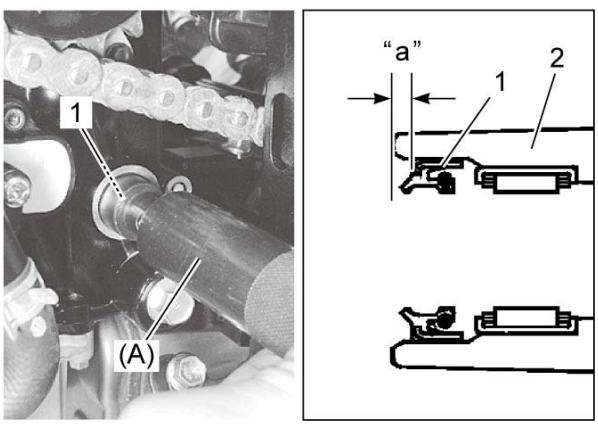

2.	Crankcase	"a":	1.5 – 2.5 mm (0.098 – 0.059 in)

- Apply grease to the oil seal lip.
  "A": Grease 99000–25011 (SUZUKI SUPER GREASE A)

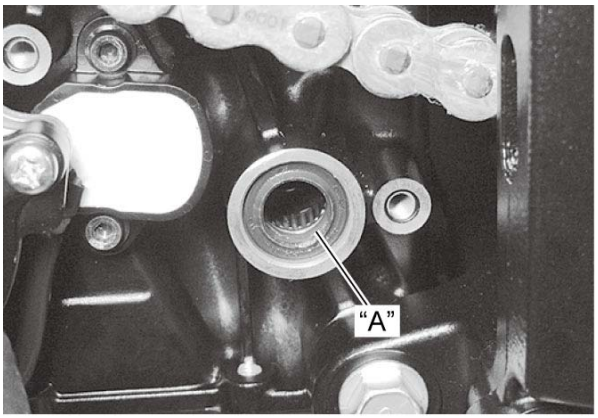
“A”

GP Switch Removal and Installation

Removal

1) Turn the ignition switch OFF.

2) Lift and support the fuel tank. Refer to ***Fuel Tank Removal and Installation***.

3) Disconnect the GP switch lead wire coupler (1).

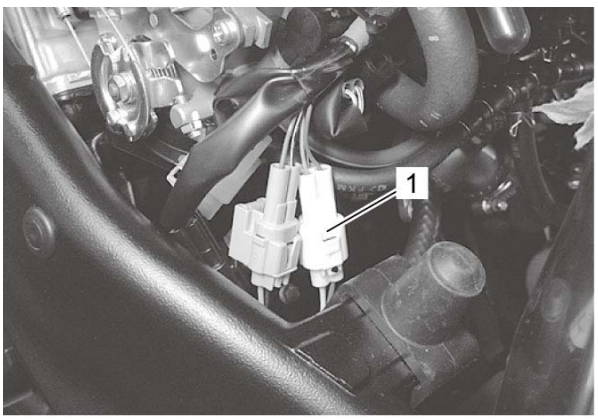

4) Remove the clamp (1).

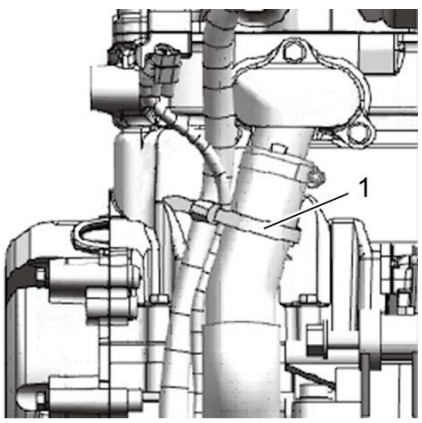

5) Remove the engine sprocket cover. Refer to ***Clutch Push Rod (Left) / Clutch Release Camshaft Removal and Installation***.

6) Remove the GP switch (1).

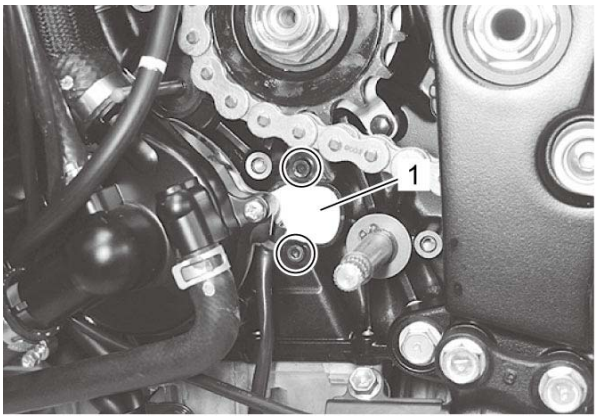

Installation

Install the GP switch in the reverse order of removal. Pay attention to the following points:

- Apply grease to the new O-ring.

  "A": Grease 99000–25011 (SUZUKI SUPER GREASE A)

- Align the GP switch pin (1) with the gearshift cam hole (2).

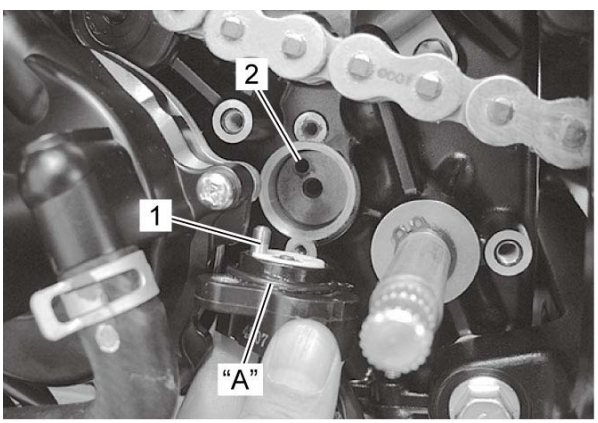

- Apply thread lock to the GP switch bolts (1).

  "A": Thread lock cement 99000–32150 (THREAD LOCK CEMENT 1322D)

- Tighten the GP switch bolts (1) to the specified torque.

Tightening torque

GP switch bolt (a): 6 N·m (0.61 kgf-m, 4.45 lbf-ft)

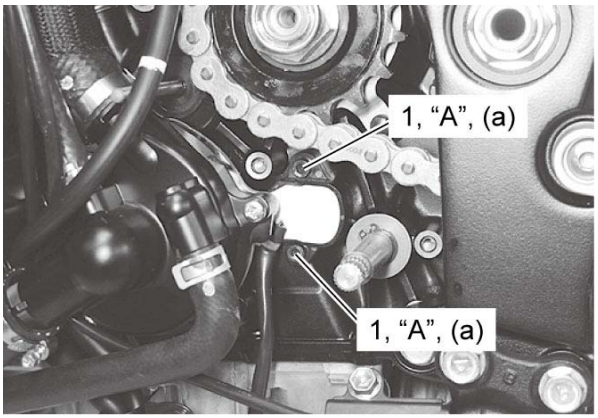

- Route the GP switch lead wire. ☞

Tightening Torque Specifications

Fastening part	Tightening torque			Note
	N·m	kgf-m	lbf-ft	
Gearshift cam bearing retainer screw	10	1.0	7.5	☞
Gearshift arm stopper	10	1.0	7.5	☞
GP switch bolt	6	0.61	4.45	☞
Gearshift link rod nut	10	1.0	7.5	☞
Gearshift cam stopper bolt	10	1.0	7.5	☞
Gearshift cam plate bolt	13	1.3	9.5	☞

Reference:
For the tightening torques of fasteners not specified in this page, refer to:
Transmission Components
Gearshift Lever Construction
Gearshift Shaft Construction
Fasteners Information

Recommended Service Material

Material	SUZUKI recommended product or Specification		Note
Grease	SUZUKI SUPER GREASE A	P/No.: 99000–25011	☞ ☞ ☞ ☞
Thread lock cement	THREAD LOCK CEMENT 1322D	P/No.: 99000–32150	☞ ☞ ☞

NOTE:

Required service material(s) is also described in:

Transmission Components

Gearshift Lever Construction

Gearshift Shaft / Gearshift Cam Plate Components

Gearshift Shaft Construction

Special Tool

09900–06104 Snap ring pliers (External: Bent nose) ☞	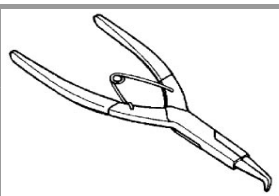	09900–06107 Snap ring pliers (External) ☞ ☞ ☞ ☞	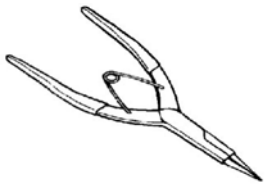
09900–20102 Vernier calipers (200 mm) ☞ ☞	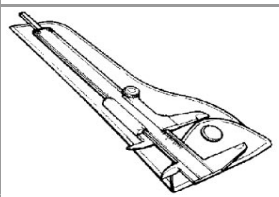	09900–20803 Thickness gauge ☞	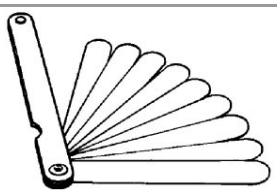
09913–70210 Bearing installer set ☞ ☞ ☞ ☞ ☞ ☞	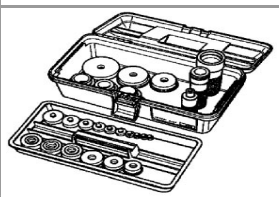	09921–20210 Bearing remover (ø12) ☞	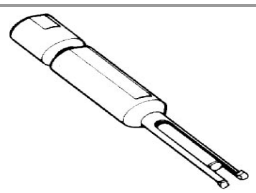
09923–74511 Bearing remover (ø20 - 35) ☞	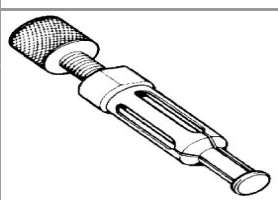	09930–30104 Rotor remover sliding shaft This tool is included in Rotor remover set (09930-30135).☞ ☞	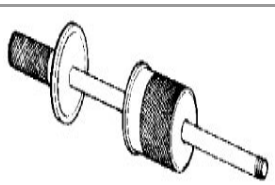

Headlight Symptom Diagnosis

Condition	Possible Cause	Action
Low beam does not light up	Circuit fuse blown.	*Replace fuse and check short circuit.*
	Bulb blown.	*Replace bulb.* ☞
	Faulty wiring or ground.	*Repair wiring.* ☞ ☞ ☞ ☞
	Faulty dimmer switch.	*Check dimmer switch.* ☞
High beam does not light up	Circuit fuse blown.	*Replace fuse and check short circuit.*
	Bulb blown.	*Replace bulb.* ☞
	Faulty wiring or ground.	*Repair wiring.* ☞ ☞ ☞ ☞
	Faulty dimmer switch.	*Check dimmer switch.* ☞
	Faulty passing switch.	*Check passing switch.* ☞

Rear Combination Light Symptom Diagnosis

Condition	Possible Cause	Action
All lights do not light up	Faulty wiring or grounding.	*Repair wiring.* ☞ ☞ ☞ ☞
Some lights do not light up	Bulbs (LED) blown.	*Replace rear combination light assembly and check short circuit.*
	Faulty wiring or grounding.	*Repair wiring.* ☞ ☞ ☞ ☞
Brake light do not light up	Faulty front brake light switch.	*Check front brake light switch.* ☞
	Faulty rear brake light switch.	*Check rear brake light switch.* ☞
	Faulty wiring or grounding.	*Repair wiring.* ☞ ☞ ☞ ☞
	Faulty rear combination light bulbs (LED).	*Replace rear combination light assembly.*
Brake light stay on	Faulty front brake light switch.	*Check front brake light switch.* ☞
	Faulty rear brake light switch.	*Check rear brake light switch.* ☞
	Faulty rear combination light bulb (LED).	*Replace rear combination light assembly.*

Turn Signal Light and Hazard Light (If Equipped) Symptom Diagnosis

Condition	Possible Cause	Action
Flash rate high or one side only flashes	Bulb blown.	*Replace bulb.* ☞
	Incorrect bulb.	*Replace bulb.* ☞
	Faulty turn signal relay.	*Check turn signal relay.* ☞
	Open circuit or high resistance existing either; between turn signal switch and non lighting bulb, or between hazard switch and non lighting bulb. (If equipped)	*Repair wiring.* ☞ ☞ ☞ ☞
	Faulty hazard switch. (If equipped)	*Check hazard switch.* ☞
Flash rate low	Supply voltage low or high resistance.	*Check charging system.* ☞ *Repair wiring.* ☞ ☞ ☞ ☞
	Faulty turn signal relay.	*Check turn signal relay.* ☞

Dimmer Switch Inspection

1) Turn the ignition switch OFF.
2) Remove the following parts.
   - Headlight assembly (GSX-S1000/A): ☞
   - Air cleaner box (GSX-S1000F/FA): ☞
3) Disconnect the left handle switch coupler (1).

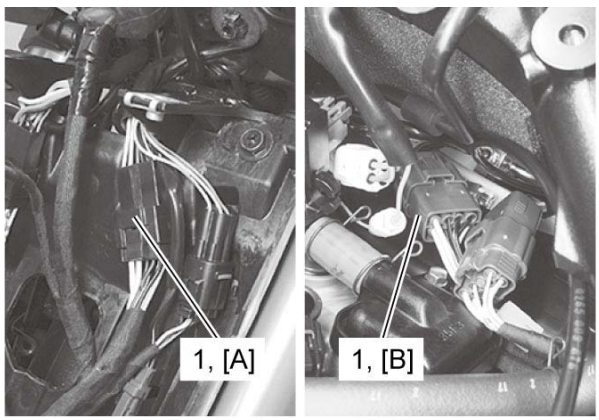

[A]:	GSX-S1000/A	[B]:	GSX-S1000F/FA

4) Inspect the dimmer switch for continuity with a circuit tester.
   If any abnormality is found, replace the left handle switch with a new one. Refer to ***Handlebar Removal and Installation***.

Color / Position	W	Y	O
HI		○	○
LO	○		○

5) After finishing the dimmer switch inspection, reinstall the removed parts.

Front Turn Signal Light Construction

GSX-S1000/A

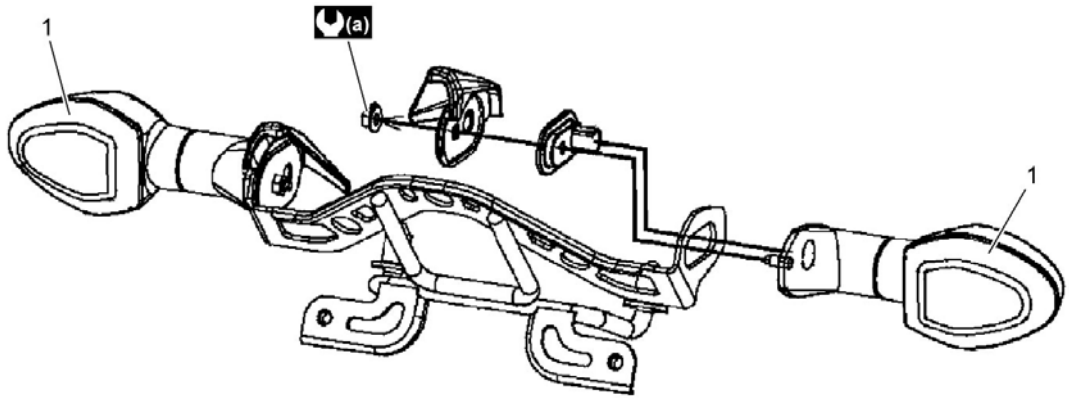

1.	Front turn signal light	(a):	1.3 N·m (0.13 kgf-m, 0.95 lbf-ft)

GSX-S1000F/FA

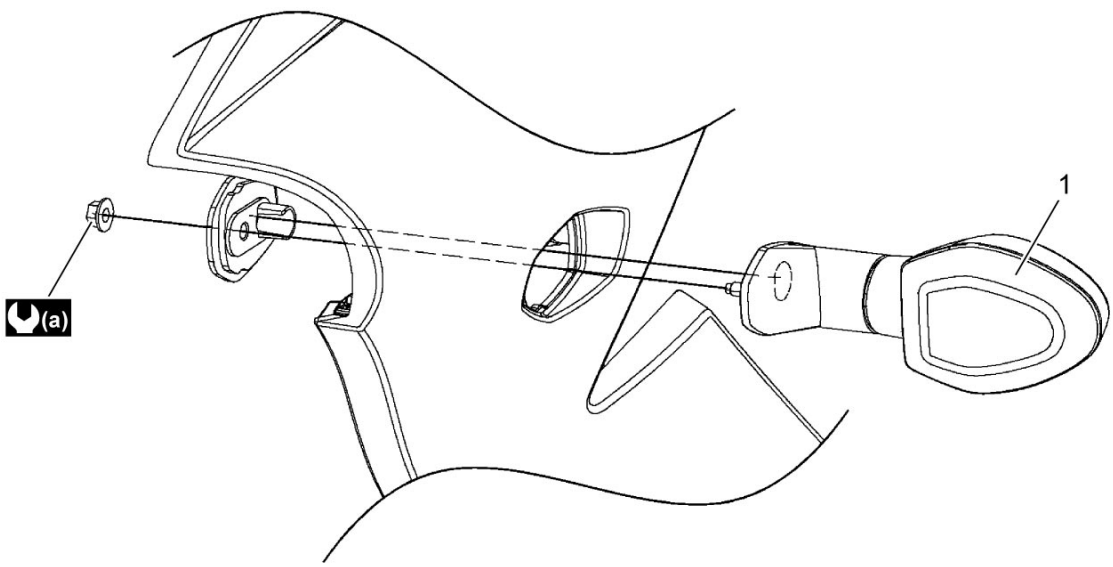

1.	Front turn signal light	(a):	1.3 N·m (0.13 kgf-m, 0.95 lbf-ft)

Front Turn Signal Light Removal and Installation

Reference: Front Turn Signal Light Construction

NOTE:
The same procedures are applicable to both the right and left lights.

GSX-S1000 / A

Removal

1) Remove the headlight assembly. ☞
2) Remove the combination meter. ☞
3) Disconnect the front turn signal light coupler (1).
4) Remove the nut (2) and front turn signal light (3).

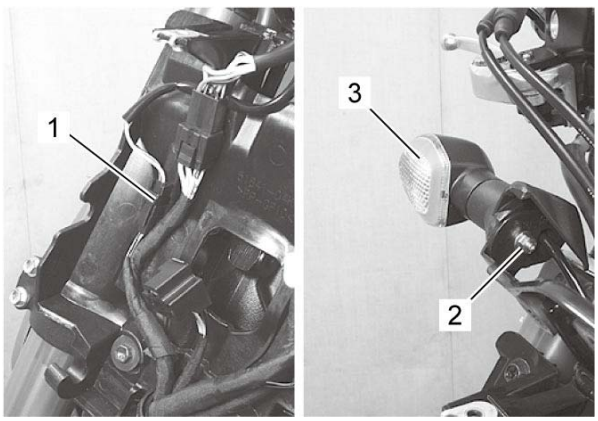

Installation

Install the front turn signal light in the reverse order of removal. Pay attention to the following points:
- Tighten the front turn signal light mounting nut (1) to the specified torque.

Tightening torque
Front turn signal light mounting nut (a): 1.3 N·m (0.13 kgf-m, 0.95 lbf-ft)

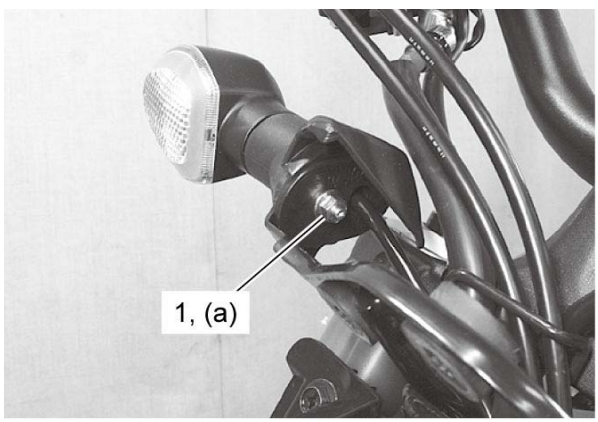

- After installation of headlight assembly, check the headlight aiming. ☞

GSX-S1000F/FA

Removal

1) Disconnect the front turn signal light coupler (1).

2) Remove the nut (2) and plate (3).

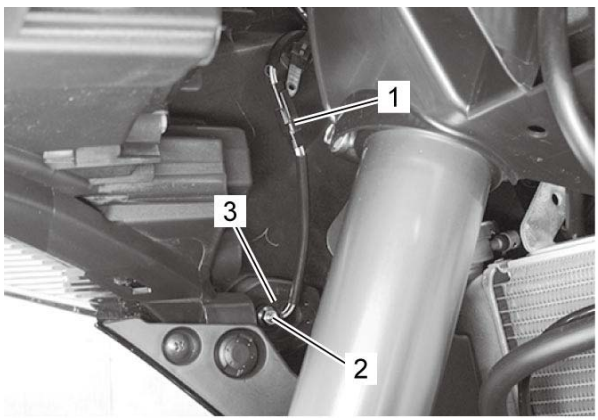

3) Remove the front turn signal light (1).

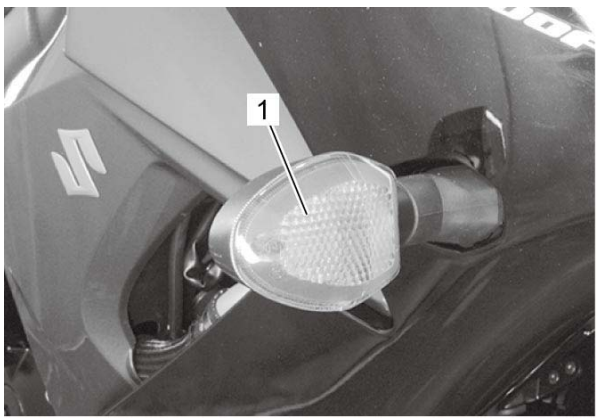

Installation

Install the front turn signal light in the reverse order of removal. Pay attention to the following point:

- Tighten the front turn signal light mounting nut (1) to the specified torque.

Tightening torque

Front turn signal light mounting nut (a): 1.3 N·m (0.13 kgf-m, 0.95 lbf-ft)

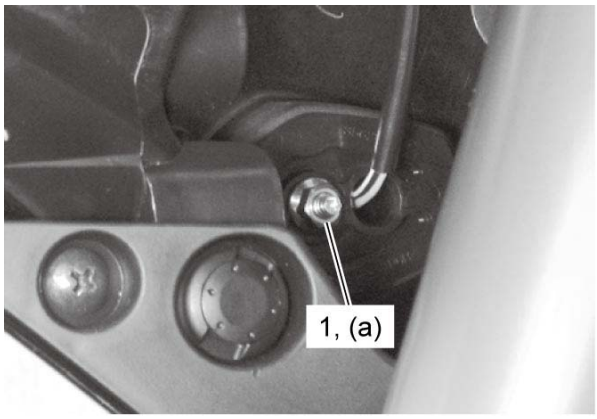
1, (a)

Hazard Switch Inspection (If Equipped)

1) Turn the ignition switch OFF.

2) Remove the following parts.
- Headlight assembly (GSX-S1000/A): ☞
- Air cleaner box (GSX-S1000F/FA): ☞

3) Disconnect the right handle switch coupler (1).

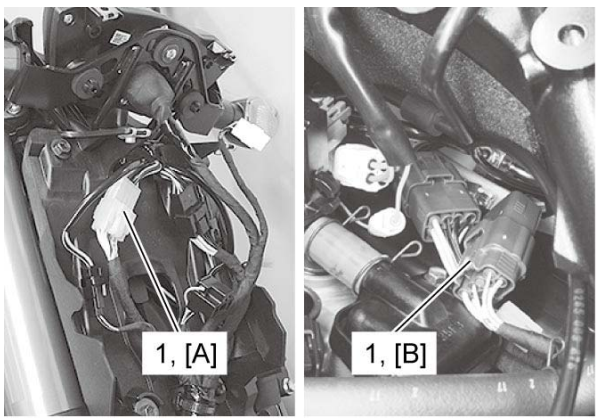

[A]:	GSX-S1000/A	[B]:	GSX-S1000F/FA

4) Inspect the hazard switch for continuity with a circuit tester.
If any abnormality is found, replace the right handle switch with a new one. Refer to ***Handlebar Removal and Installation***.

Color / Position	B	Lbl	Lg
OFF			
ON	O	O	O

5) After finishing the hazard switch inspection, install the removed parts.

Headlight Beam Adjustment

1) Adjust the headlight beam horizontally turning the bolt (1) with a screwdriver.
2) Adjust the headlight beam vertically turning the bolt (2) with a screwdriver.

GSX-S1000/A

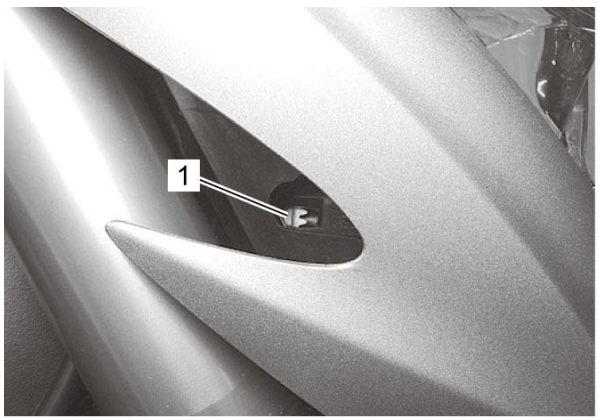

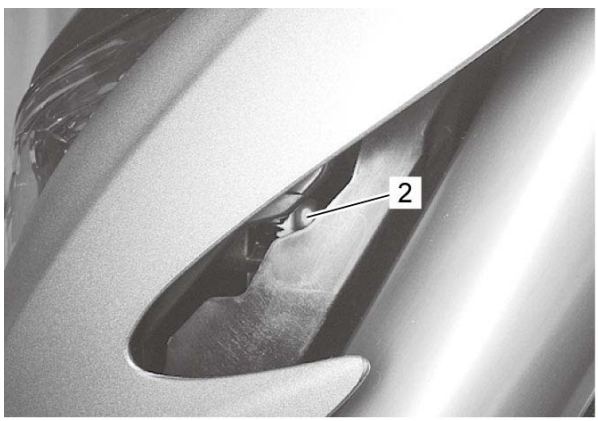

GSX-S1000F/FA

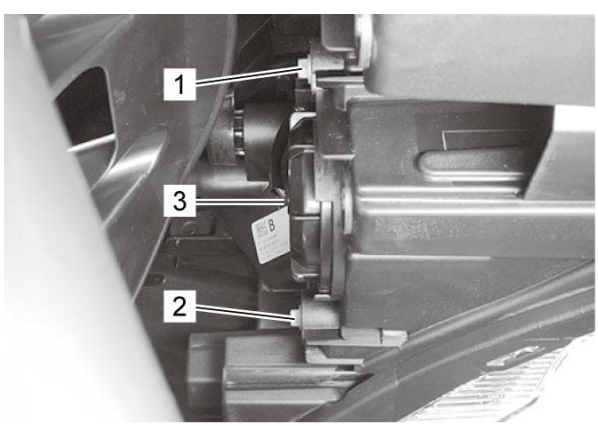

3.	Low beam

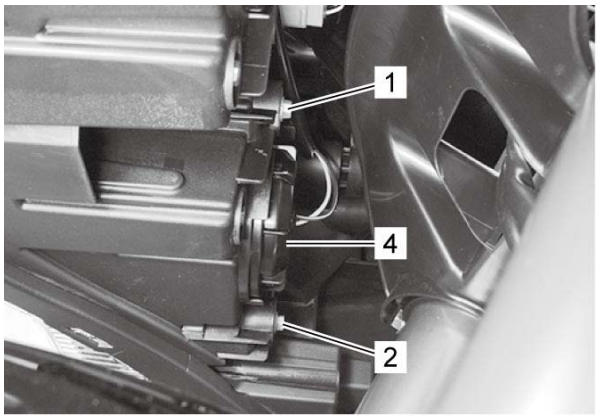

4.	High beam

Headlight Bulb / Position Light LED Replacement

⚠CAUTION:
As the headlight bulb operates at a high temperature, handle the bulb after sufficiently cooled.

Headlight Bulb

GSX-S1000/A

Replace the headlight bulb in the following procedures:

1) Move the headlight assembly. ☞

2) Remove the bulb socket rubber cap (1).

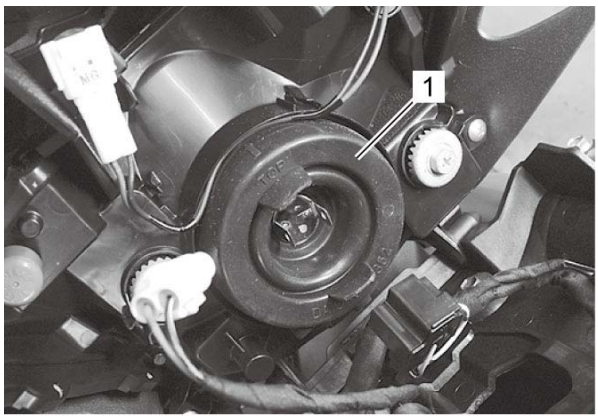

3) Unhook the bulb holder spring (1) and remove the headlight bulb (2).

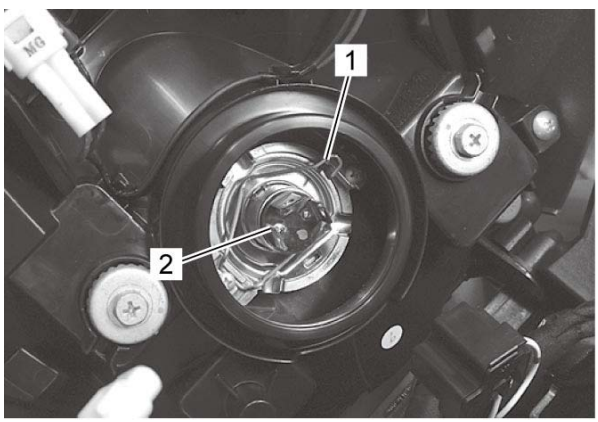

4) After finishing the headlight bulb replacing, install the removed parts.

5) After installation of headlight assembly, check the headlight aiming. ☞

GSX-S1000F/FA

1) Remove the cap (1).

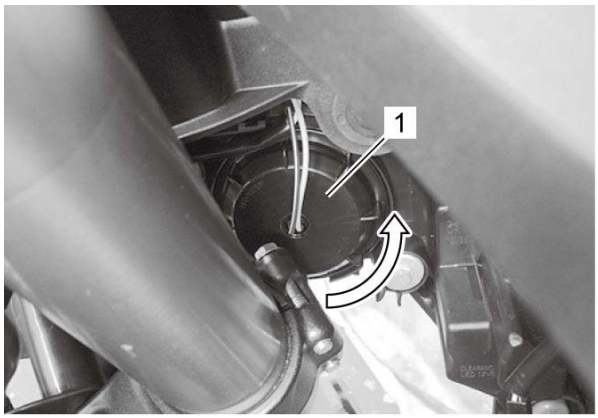

2) Disconnect the headlight coupler (1).

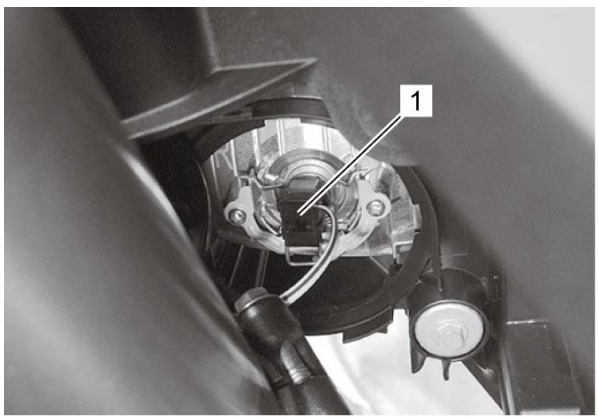

3) Unlock the bulb holder spring (1) and remove the headlight bulb (2).

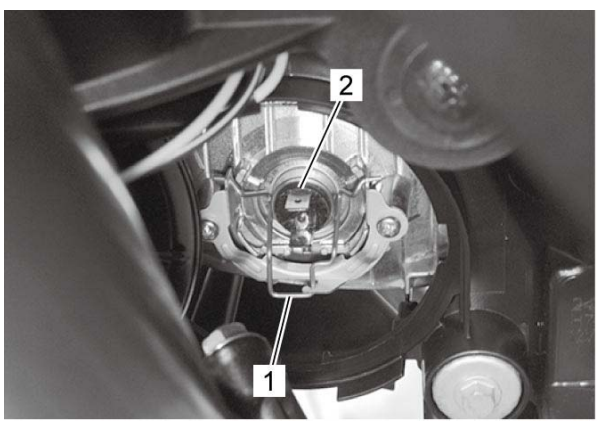

4) After finishing the headlight bulb replacing, check the headlight aiming. ☞

Position Light LED (If Equipped)

NOTE:
If LED operation is abnormal, replace the headlight assembly with a new one. ☞

Headlight Components

GSX-S1000/A

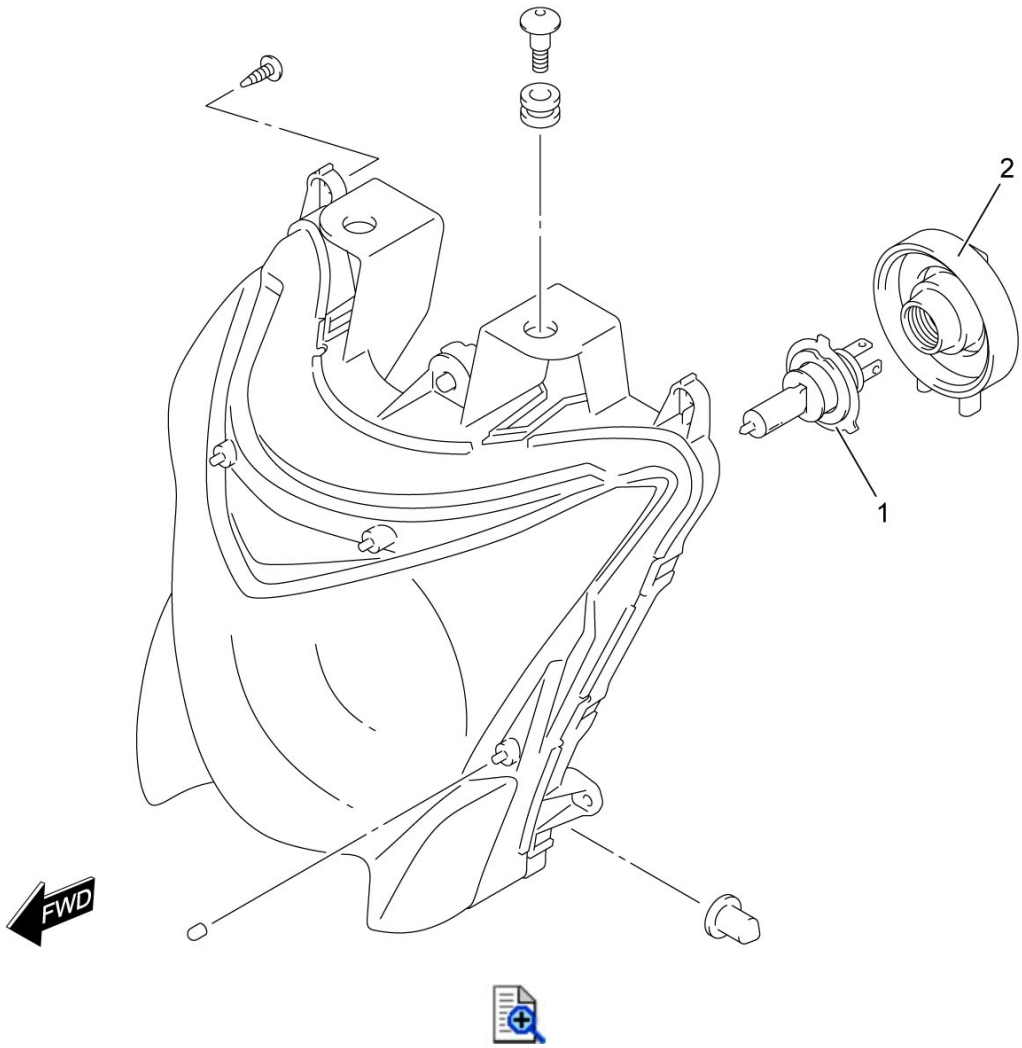

1.	Headlight bulb (12 V 60/55 W, H4)	2.	Bulb socket rubber cap

GSX-S1000F/FA

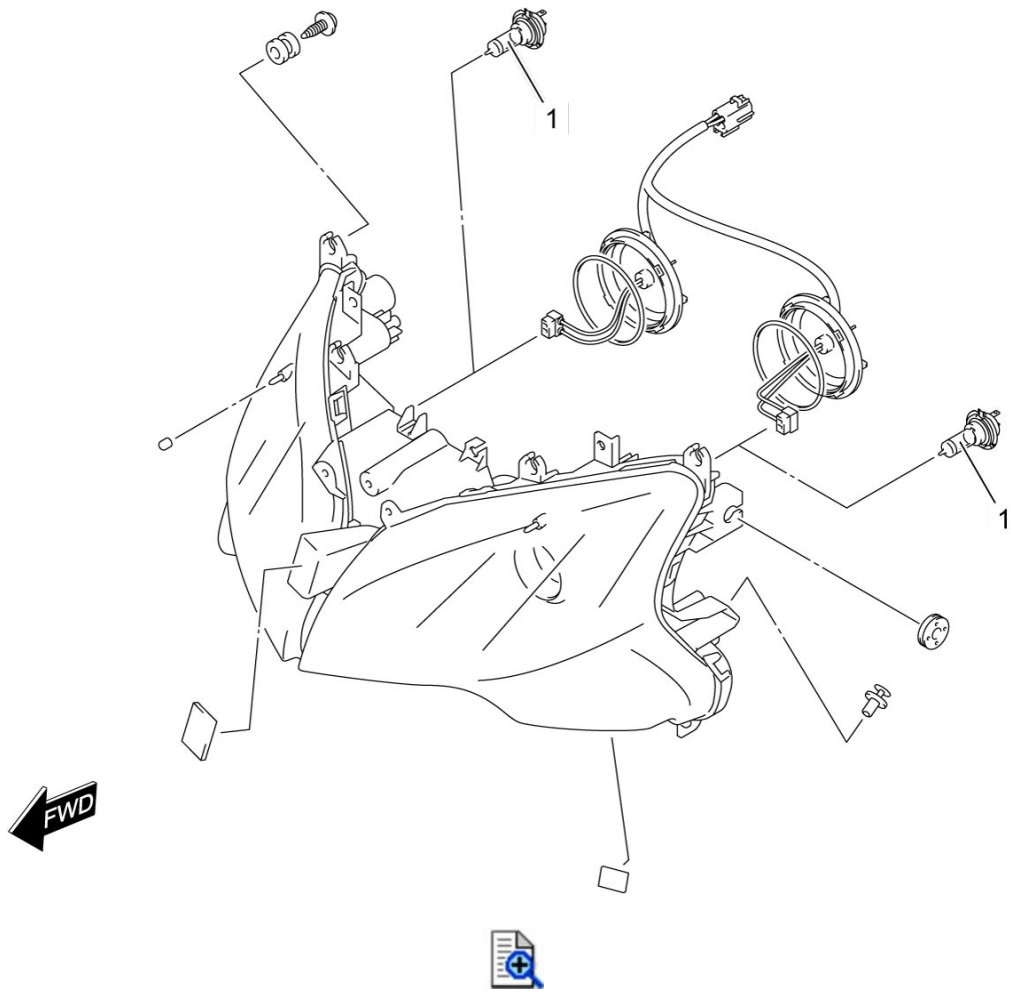

1.	Headlight bulb (12 V 55 W, H7 x 2)

Headlight Construction

GSX-S1000 / A

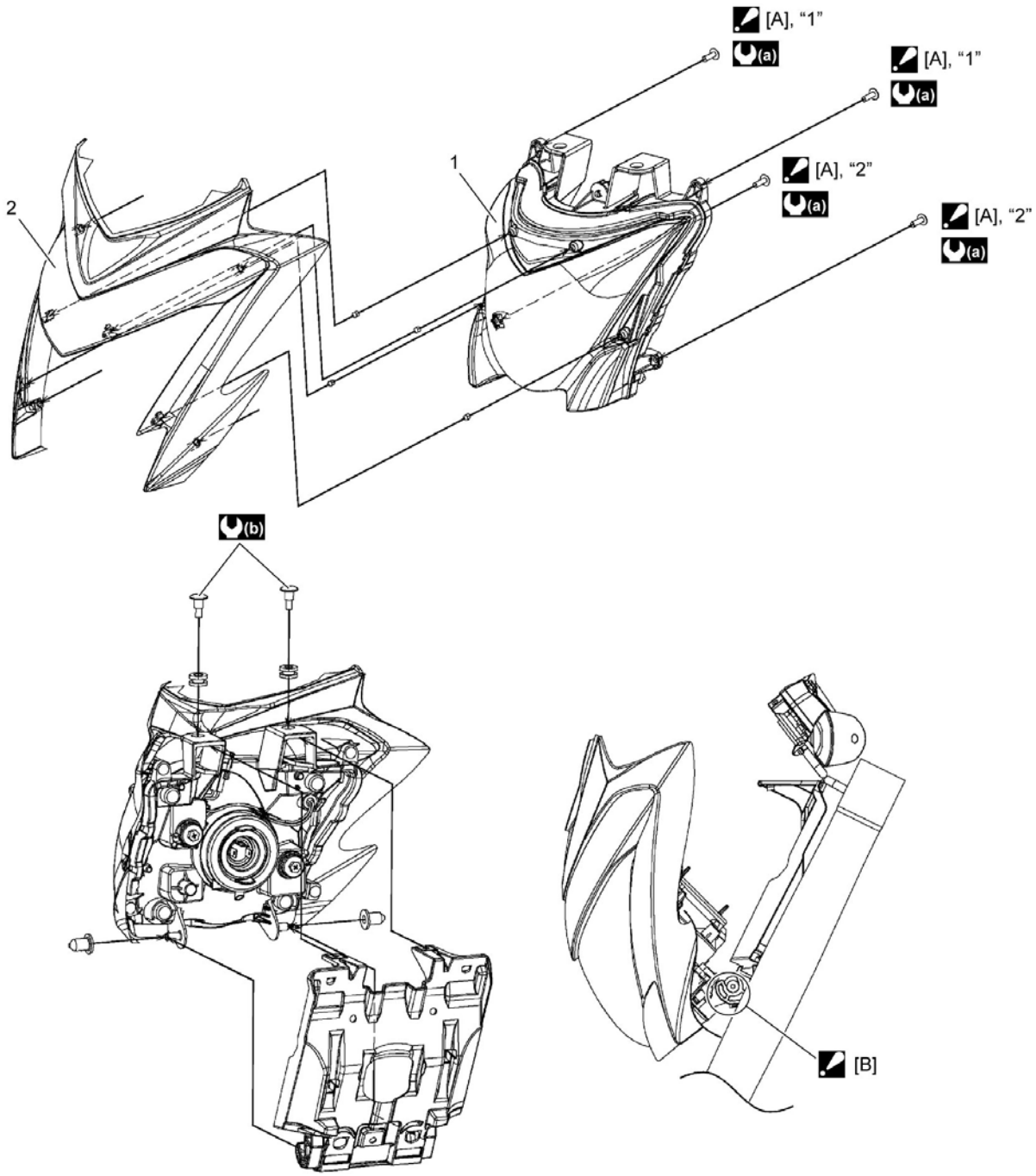

[A]:	Tighten the screws in order of "1" → "2".	2.	Body cowling
[B]:	Do not contact with other parts.	(a):	2.3 N·m (0.23 kgf-m, 1.70 lbf-ft)

1.	Headlight	(b):	5.5 N·m (0.56 kgf-m, 4.05 lbf-ft)

GSX-S1000F/FA

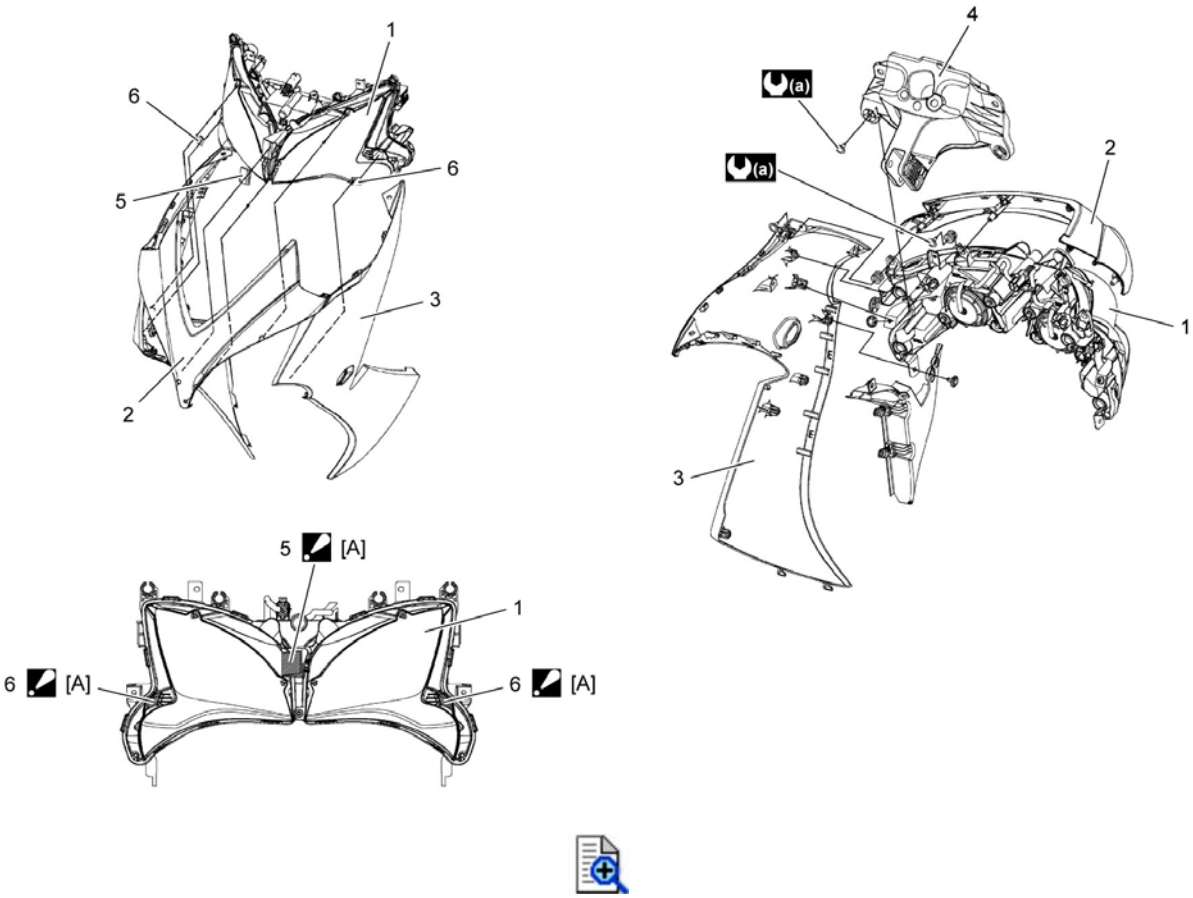

[A]:	Sticking the fastener aligning with the emboss line.	4.	Cowling brace
1.	Headlight	5.	Headlight lens fastener (large)
2.	Body cowling	6.	Headlight lens fastener (small)
3.	Side cover	(a):	2 N·m (0.20 kgf-m, 1.50 lbf-ft)

Headlight Removal and Installation

Reference: Headlight Construction

GSX-S1000 / A

Removal

1) Remove the meter cover. ☞

2) Remove the headlight mounting screws (1).

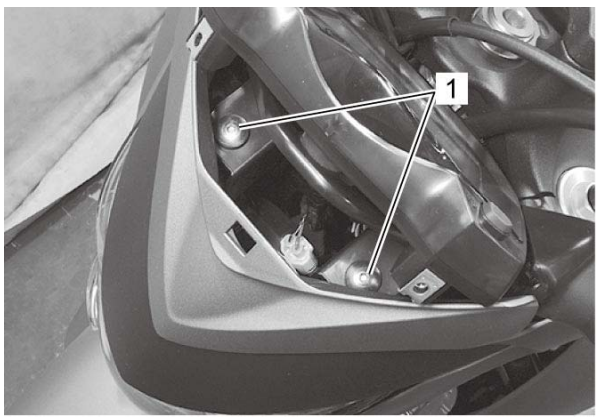

3) Move the headlight assembly (1) arrow direction.

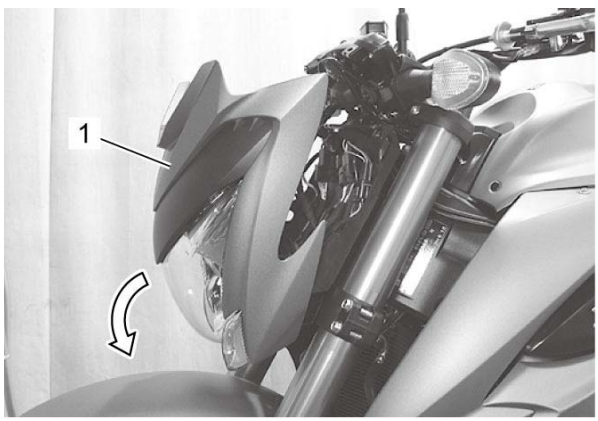

4) Disconnect the headlight coupler (1).

5) Disconnect the position light coupler (2) (If equipped).

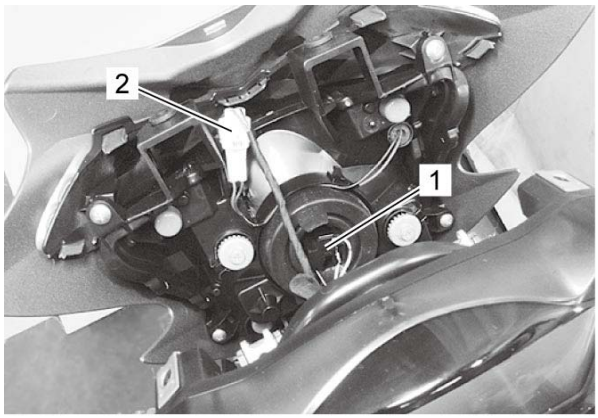

6) Remove the headlight assembly (1).

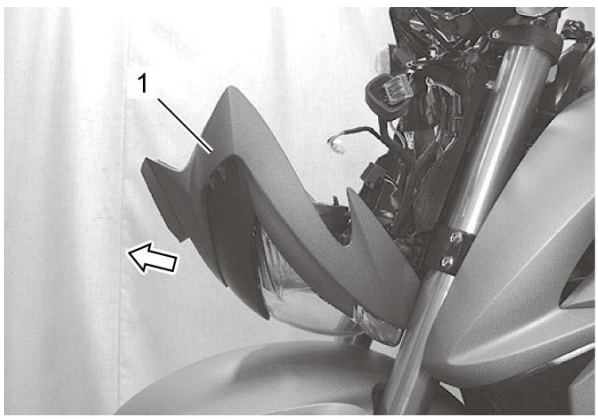

7) Remove the screws (1) and headlight (2).

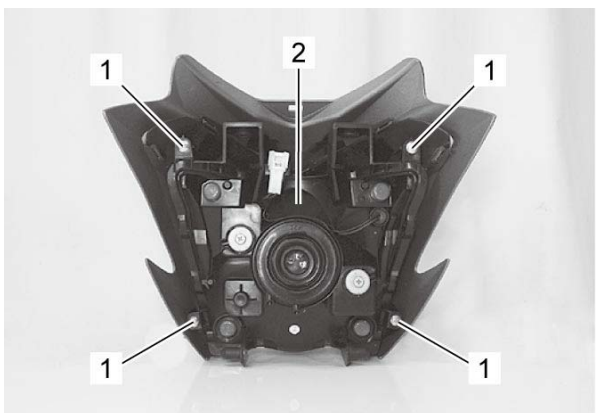

Installation

Installation is in the reverse order of removal. Pay attention to the following points:

- Tighten the headlight screws (M5) (1) to the specified torque.

Tightening torque
Headlight screw (M5) (a): 2.3 N·m (0.23 kgf-m, 1.70 lbf-ft)

- Tighten the headlight screws (M5) (2) to the specified torque.

Tightening torque
Headlight screw (M5) (a): 2.3 N·m (0.23 kgf-m, 1.70 lbf-ft)

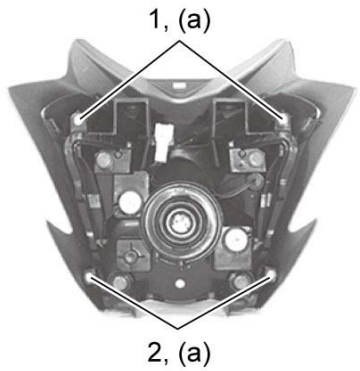

- Tighten the headlight screws (M6) (1) to the specified torque.

Tightening torque
Headlight screw (M6) (a): 5.5 N·m (0.56 kgf-m, 4.05 lbf-ft)

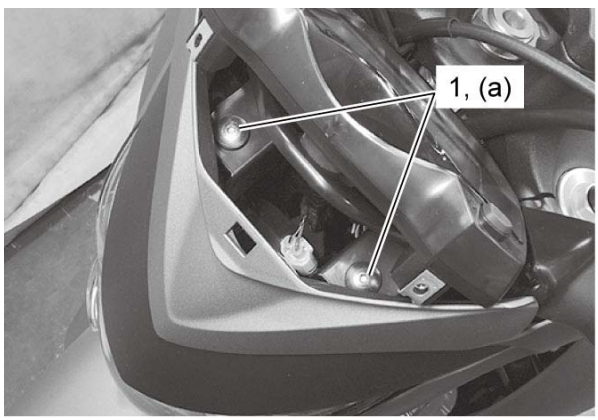

- After installing, be sure to inspect the headlight beam. Refer to ***Headlight Beam Adjustment***.

GSX-S1000F/FA

Removal

1) Remove the cowling brace. Refer to ***Body Cowling Removal and Installation***.
2) Remove the headlight (1).

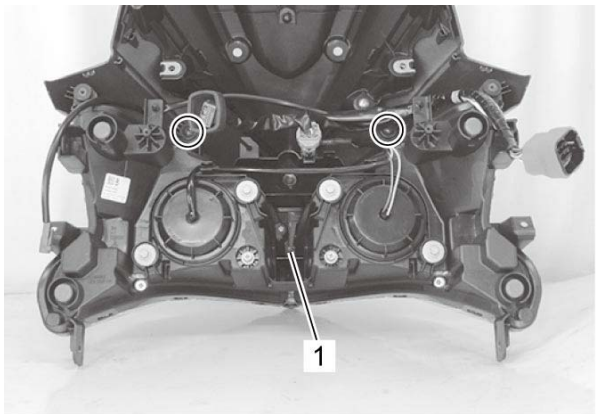

3) Disconnect the headlight coupler (1) and remove the main harness No. 2 (2).

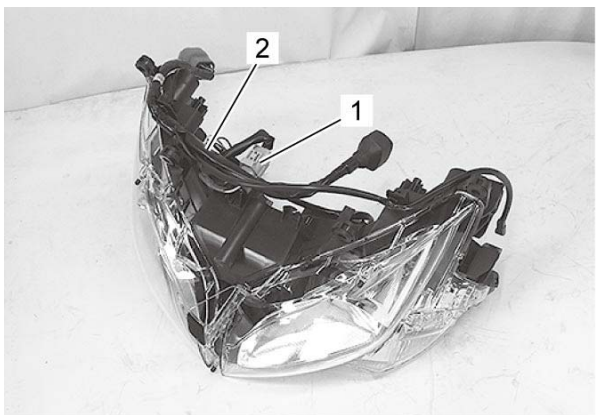

Installation

Install the headlight in the reverse order of removal. Pay attention to the following points:

- Install the main harness No. 2 (1) and connect the headlight coupler (2).

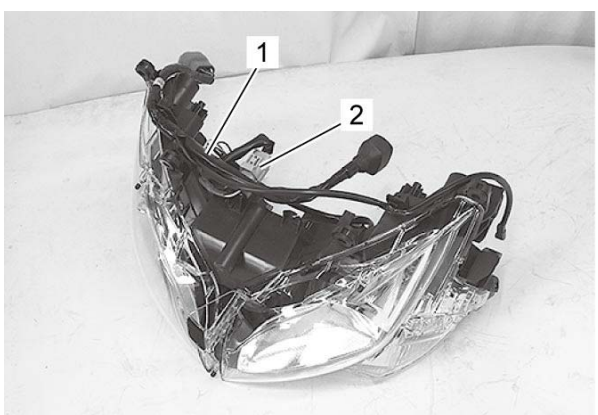

- Tighten the headlight screws (1) to the specified torque.

Tightening torque

Headlight screw (a): 2 N·m (0.20 kgf-m, 1.50 lbf-ft)

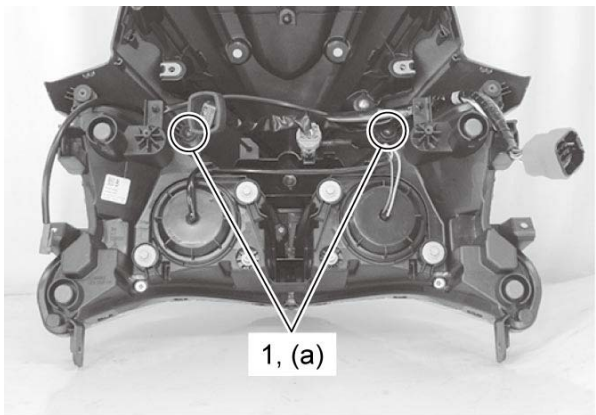

- Install the body cowling assembly. ☞
- After installing, be sure to inspect the headlight beam. Refer to ***Headlight Beam Adjustment***.

License Plate Light Bulb Replacement

Reference: License Plate Light Components

1) Remove the screws (1) and license plate light cover (2).

2) Replace the bulb (3).

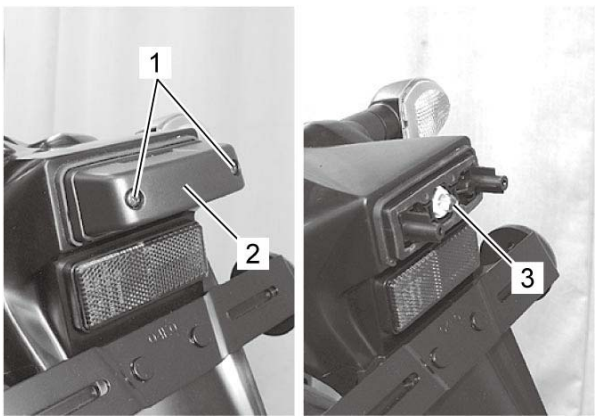

3) Install the removed parts.

License Plate Light Components

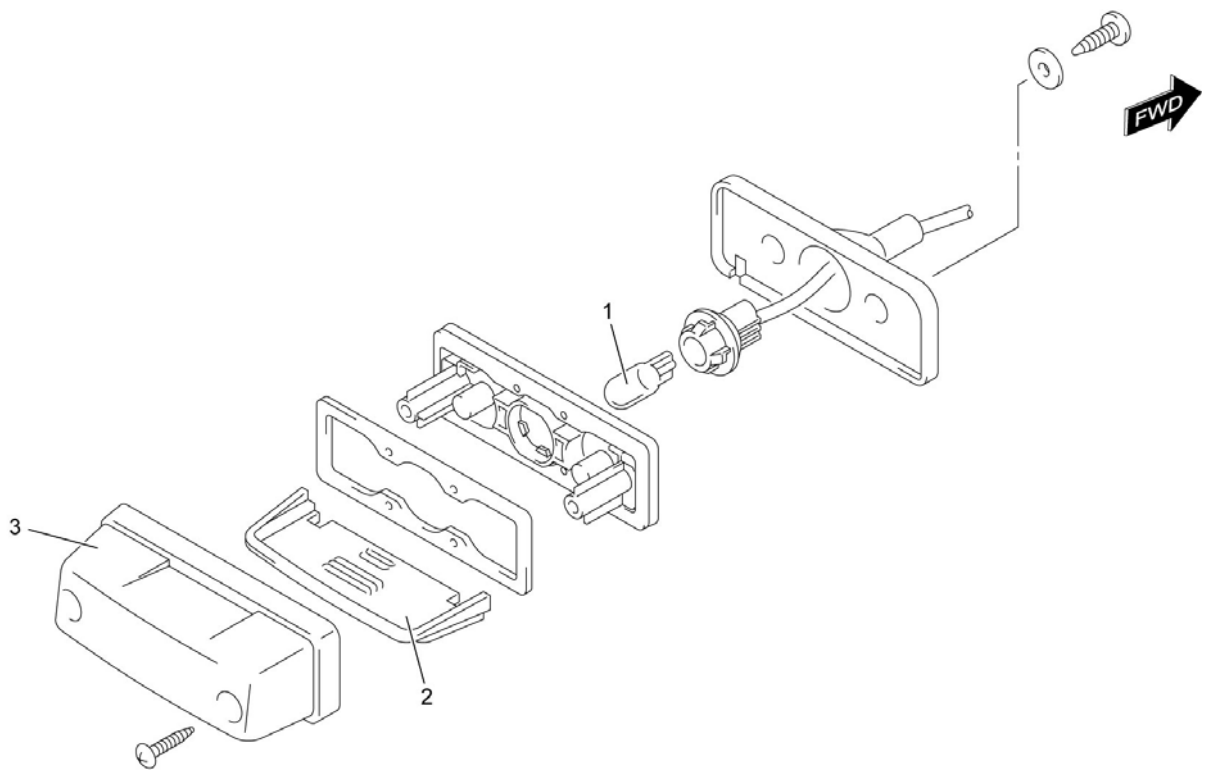

1.	License plate light bulb (12 V 5 W)	2.	Lens	3.	License plate light cover

License Plate Light Removal and Installation

Reference: Rear Lighting System Construction

Removal

1) Remove the rear inner fender. Refer to ***Rear Fender Rear Removal and Installation***.

2) Remove the screws (1) and license plate light assembly (2).

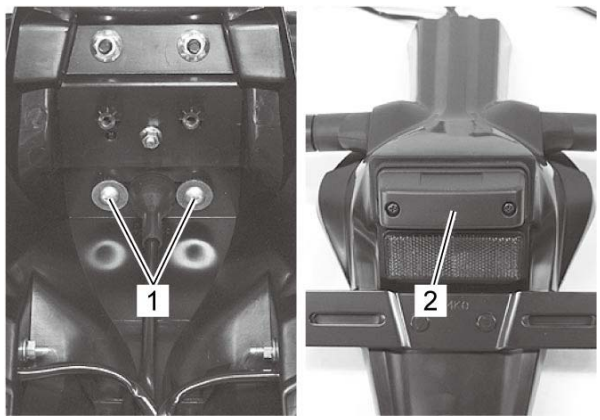

Installation

Install the license plate light in the reverse order of removal. Pay attention to the following point:

- Tighten the license plate light screws (1) to the specified torque.

Tightening torque

License plate light screw (a): 3 N·m (0.31 kgf-m, 2.25 lbf-ft)

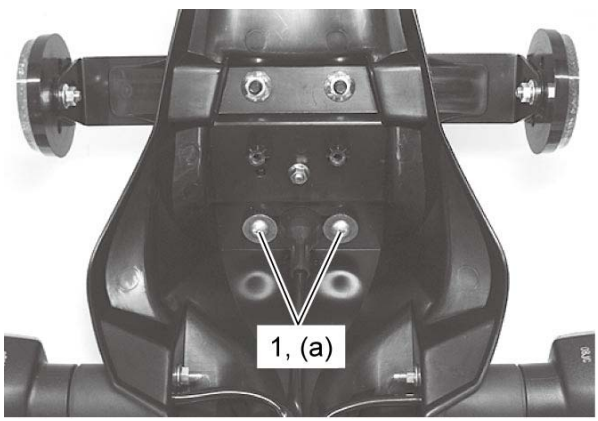

Passing Light Switch Inspection

1) Turn the ignition switch OFF.

2) Remove the following parts.
- Headlight assembly (GSX-S1000/A): ☞
- Air cleaner box (GSX-S1000F/FA): ☞

3) Disconnect the left handle switch coupler (1).

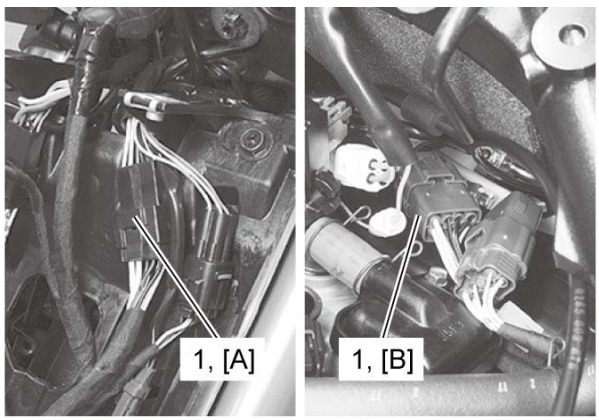

[A]:	GSX-S1000/A	[B]:	GSX-S1000F/FA

4) Inspect the passing light switch for continuity with a circuit tester.
If any abnormality is found, replace the left handle switch with a new one. Refer to ***Handlebar Removal and Installation***.

Color / Position	W	Y	O
•			
PUSH	○	○	○

5) After finishing the passing light switch inspection, install the removed parts.

Precautions for Lighting Systems

NOTICE:

- **When you touch the bulb with your bare hands, clean the bulb with a cloth moistened with alcohol or soap water to prevent premature bulb failure.**
- **Do not use the bulb of a wattage other than specification.**

Rear Combination Light Removal and Installation

Reference: Rear Lighting System Construction

Removal

1) Remove the frame center cover. ☞

2) Disconnect the combination light coupler (1).

3) Remove the rear combination light (2).

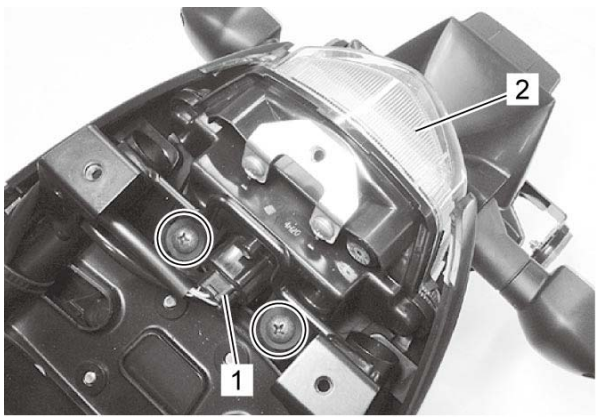

4) Remove the combination light bracket (1).

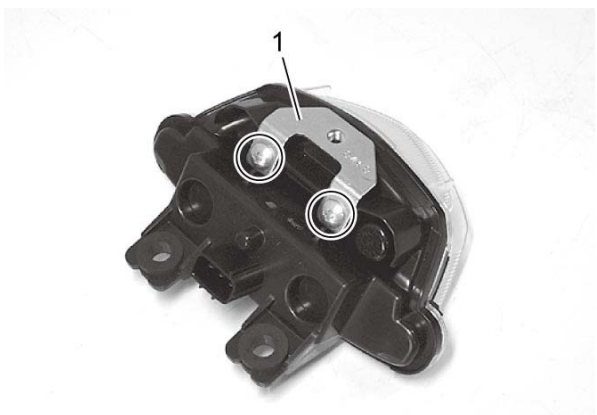

Installation

Install the rear combination light in the reverse order of removal. Pay attention to the following point:

- Tighten the rear combination light screws (1) to the specified torque.

Tightening torque

Rear combination light screw (a): 3 N·m (0.31 kgf-m, 2.25 lbf-ft)

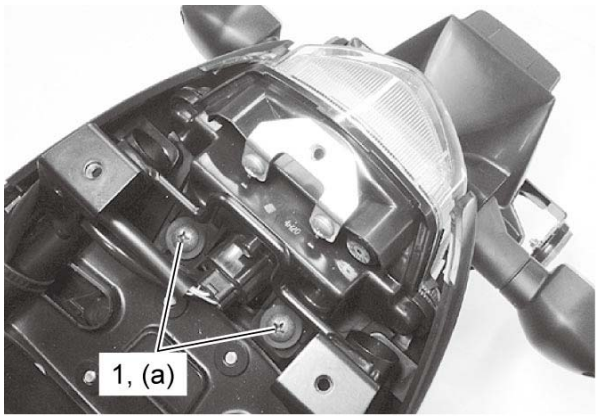
1, (a)

Rear Lighting System Construction

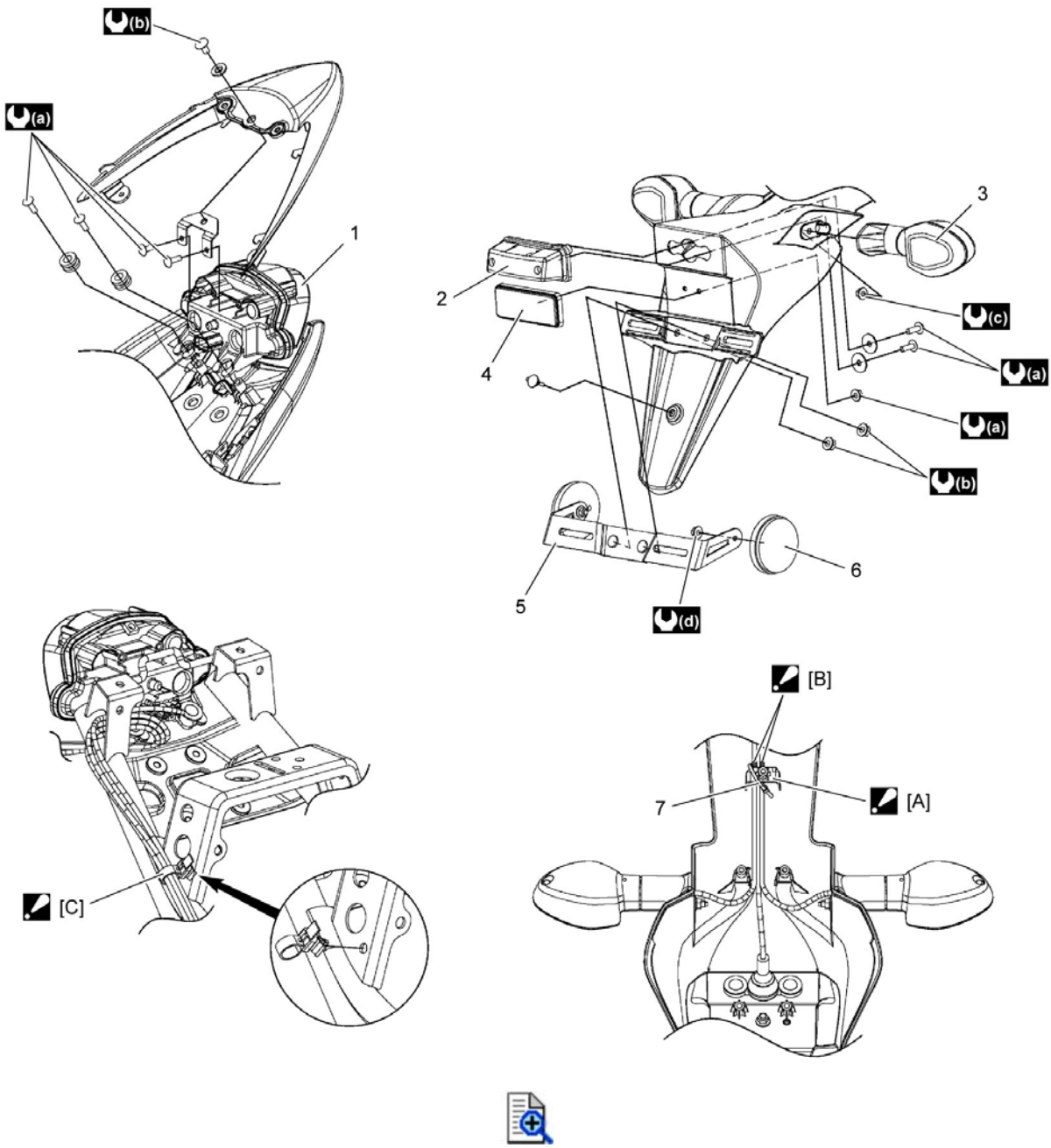

[A]:	Pass the rear turn signal lead wires and license plate light lead wire in the arch of rear fender rear.	5.	License plate bracket
[B]:	Clamp the rear turn signal light lead wires and license plate lead wire at the marking tape position of the rear turn signal lead wires.	6.	Rear side reflex reflector (If equipped)
[C]:	Clamp the rear turn signal light lead wires and license plate light lead wire with the clamp.	7.	Clamp
1.	Rear combination light	(a):	3 N·m (0.31 kgf-m, 2.25 lbf-ft)

2.	License plate light	(b):	5.5 N·m (0.56 kgf-m, 4.05 lbf-ft)
3.	Rear turn signal light	(c):	1.3 N·m (0.13 kgf-m, 0.95 lbf-ft)
4.	Rear reflex reflector	(d):	1.8 N·m (0.18 kgf-m, 1.35 lbf-ft)

Rear Reflex Reflector Removal and Installation

Removal

1) Remove the rear inner fender. Refer to ***Rear Fender Rear Removal and Installation***.

2) Remove the nut (1) and rear reflex reflector (2).

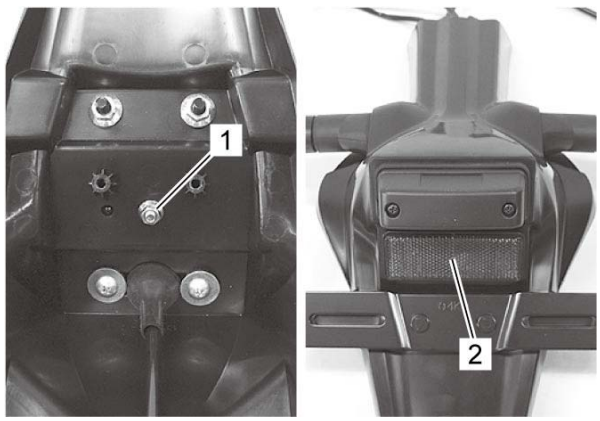

Installation

1) Fit the protrusion (1) to the hole (2).

2) Install the rear reflex reflector (3).

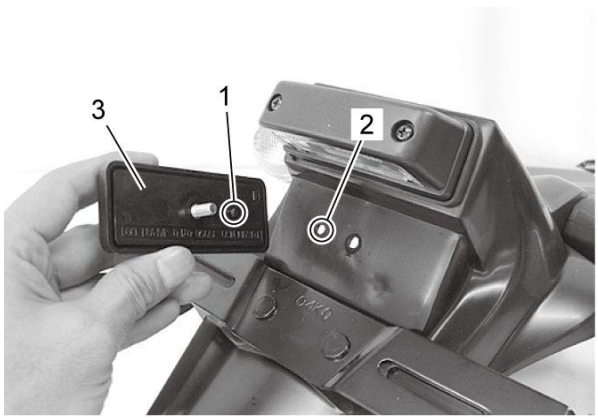

3) Tighten the rear reflex reflector nut (1) to the specified torque.

Tightening torque

Rear reflex reflector nut (a): 3 N·m (0.31 kgf-m, 2.25 lbf-ft)

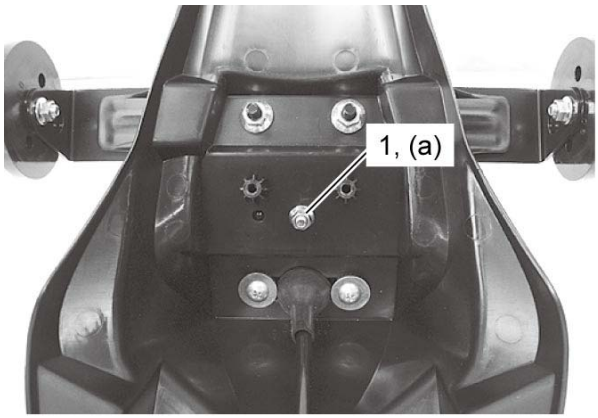

4) Install the removed parts.

Rear Turn Signal Light Removal and Installation

Reference: Rear Lighting System Construction

NOTE:
The same procedures are applicable to both the right and left lights.

Removal

1) Remove the rear inner fender. Refer to ***Rear Fender Rear Removal and Installation***.

2) Remove the nut (1) and rear turn signal light (2).

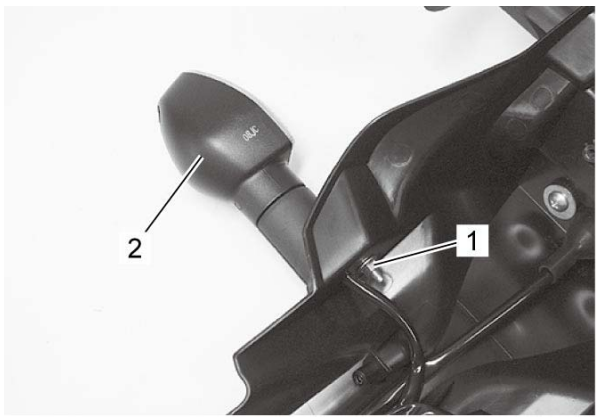

Installation

Install the rear turn signal light in the reverse order of removal. Pay attention to the following points:

- Tighten the rear turn signal light mounting nut (1) to the specified torque.

Tightening torque

Rear turn signal light mounting nut (a): 1.3 N·m (0.13 kgf-m, 0.95 lbf-ft)

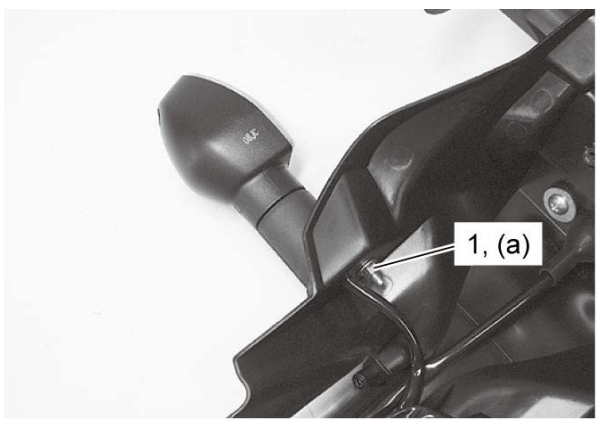

- Route the turn signal light lead wire. Refer to ***Rear Lighting System Construction***.

Reflex Reflector Construction (If Equipped)

Front Side Reflex Reflector

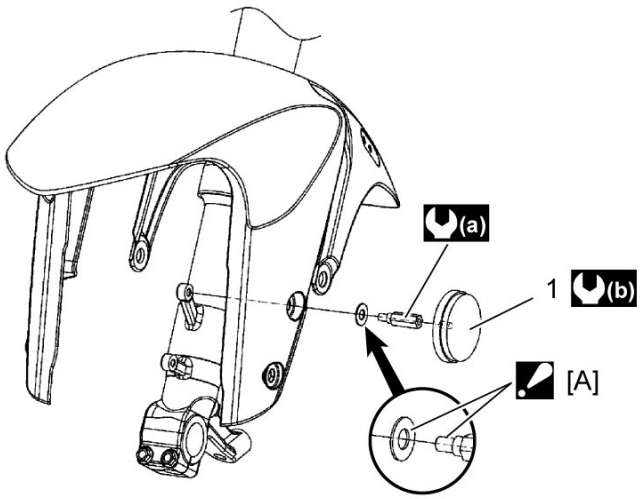

[A]:	Sticking the washer with a double sided tape.
1.	Front side reflex reflector x 2 pcs. (If equipped)
(a):	10 N·m (1.0 kgf-m, 7.5 lbf-ft)
(b):	1.8 N·m (0.18 kgf-m, 1.35 lbf-ft)

Rear Side Reflex Reflector

Refer to ***Rear Lighting System Construction***.

Turn Signal Light Bulb Replacement

Reference: Turn Signal Light Components

1) Remove the screw (1) and lens (2).



2) Replace the bulb (1) with a new one.

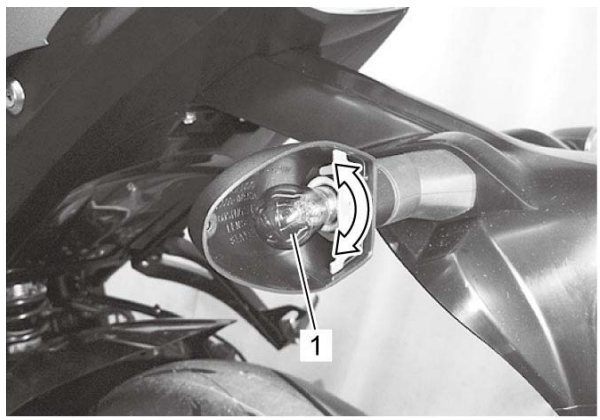

3) Reinstall the lens.

Turn Signal Light Components

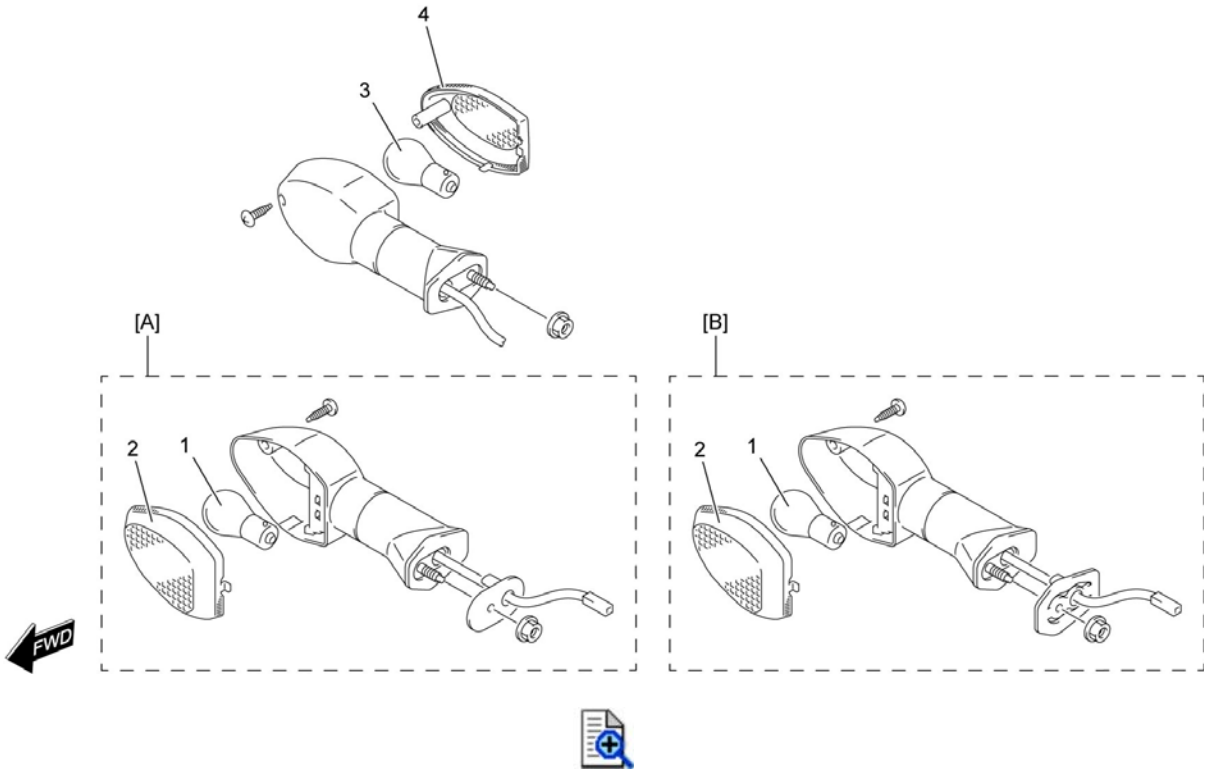

[A]:	GSX-S1000/A	1.	Front turn signal light bulb (12 V 21 W x 2)	3.	Rear turn signal light bulb (12 V 21 W x 2)
[B]:	GSX-S1000F/FA	2.	Front turn signal light lens	4.	Rear turn signal light lens

Turn Signal Relay Inspection

Refer to ***Electrical Components Location***.

NOTE:
Make sure that the battery is fully charged.

Before removing the turn signal relay, check the operation of the turn signal light.
If the turn signal light does not illuminate, inspect the bulb, turn signal switch and circuit connection.
If the bulb, turn signal switch and circuit connection are OK, the turn signal relay may be faulty; therefore, replace the turn signal relay with a new one. ☞

Turn Signal Relay Removal and Installation

Removal

1) Turn the ignition switch OFF.
2) Remove the right frame rear upper cover. Refer to ***Frame Rear Upper Cover / Frame Center Cover Removal and Installation***.
3) Disconnect the coupler (1) and remove the clamp (2).
4) Remove the turn signal relay (3).

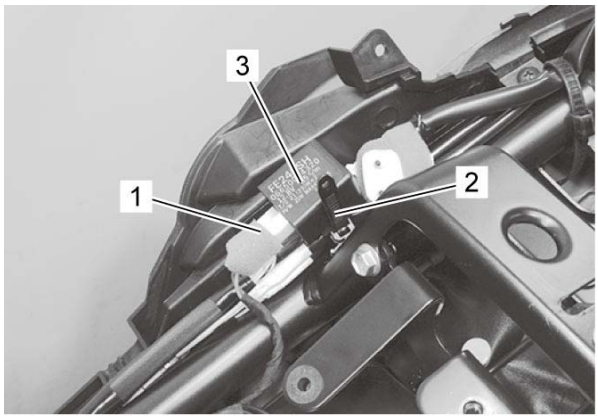

Installation

Install the turn signal relay in the reverse order of removal. Pay attention to the following point:

- Install the starter relay with the clamp. Refer to ***Wiring Harness Routing Diagram***.

Turn Signal Switch Inspection

1) Turn the ignition switch OFF.

2) Remove the following parts.
- Headlight assembly (GSX-S1000/A): ☞
- Air cleaner box (GSX-S1000F/FA): ☞

3) Disconnect the left handle switch coupler (1).

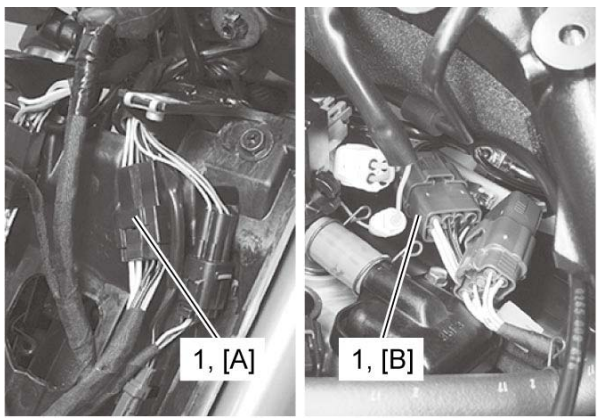

[A]:	GSX-S1000/A	[B]:	GSX-S1000F/FA

4) Inspect the turn signal switch for continuity with a circuit tester. If any abnormality is found, replace the left handle switch with a new one. Refer to ***Handlebar Removal and Installation***.

Color / Position	Lg	Lbl	B
L		○——	——○
PUSH			
R	○——	——○	

5) After finishing the turn signal switch inspection, install the removed parts.

Tightening Torque Specifications

Fastening part	Tightening torque			Note
	N·m	kgf-m	lbf-ft	
Headlight screw (M5)	2.3	0.23	1.70	☞ ☞
Headlight screw (M6)	5.5	0.56	4.05	☞
Headlight screw	2	0.20	1.50	☞
Rear combination light screw	3	0.31	2.25	☞
License plate light screw	3	0.31	2.25	☞
Rear reflex reflector nut	3	0.31	2.25	☞
Front turn signal light mounting nut	1.3	0.13	0.95	☞ ☞
Rear turn signal light mounting nut	1.3	0.13	0.95	☞

Reference:
For the tightening torques of fasteners not specified in this page, refer to:
Headlight Construction
Rear Lighting System Construction
Front Turn Signal Light Construction
Reflex Reflector Construction (If Equipped)
Fasteners Information

Body Cowling Construction

GSX-S1000/A

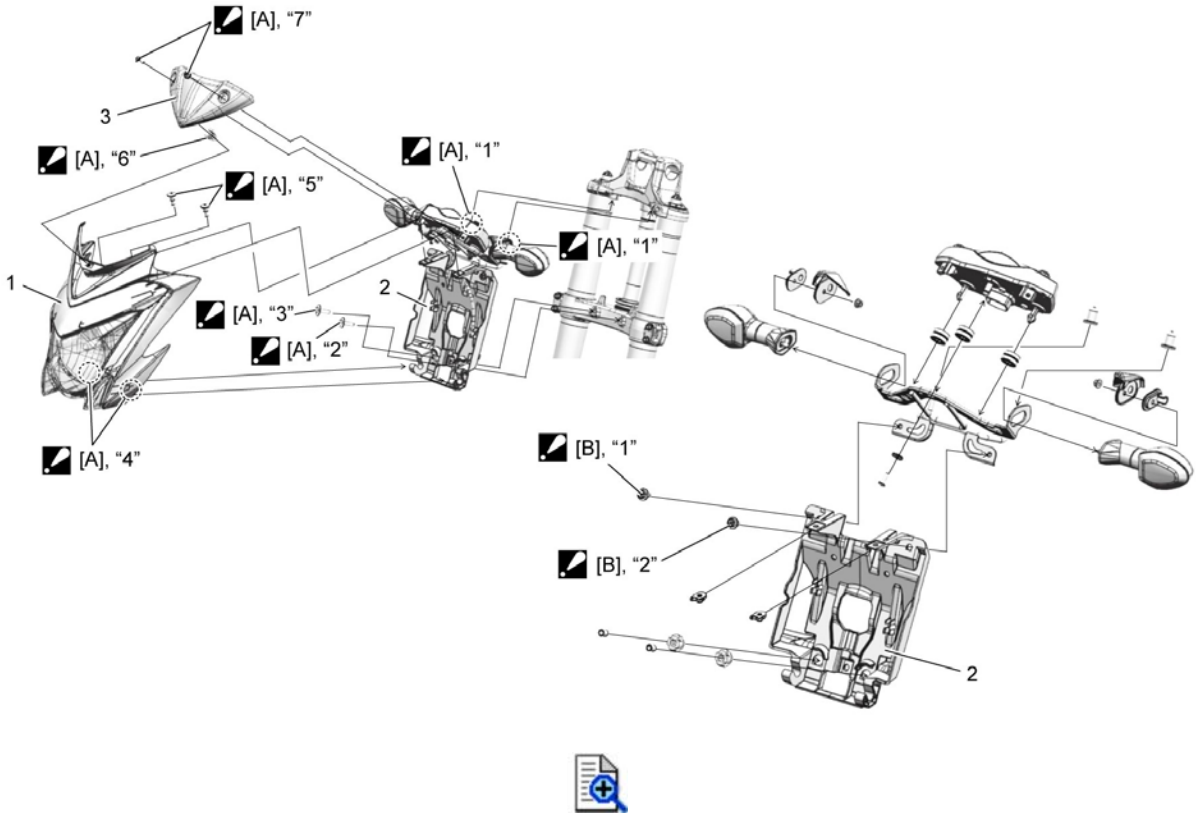

[A]:	Installation in order of "1" → "2" → "3" → "4" → "5" → "6" → "7".	2.	Rear body cowling
[B]:	Installation in order of "1" → "2".	3.	Meter cover
1.	Headlight assembly		

GSX-S1000F/FA

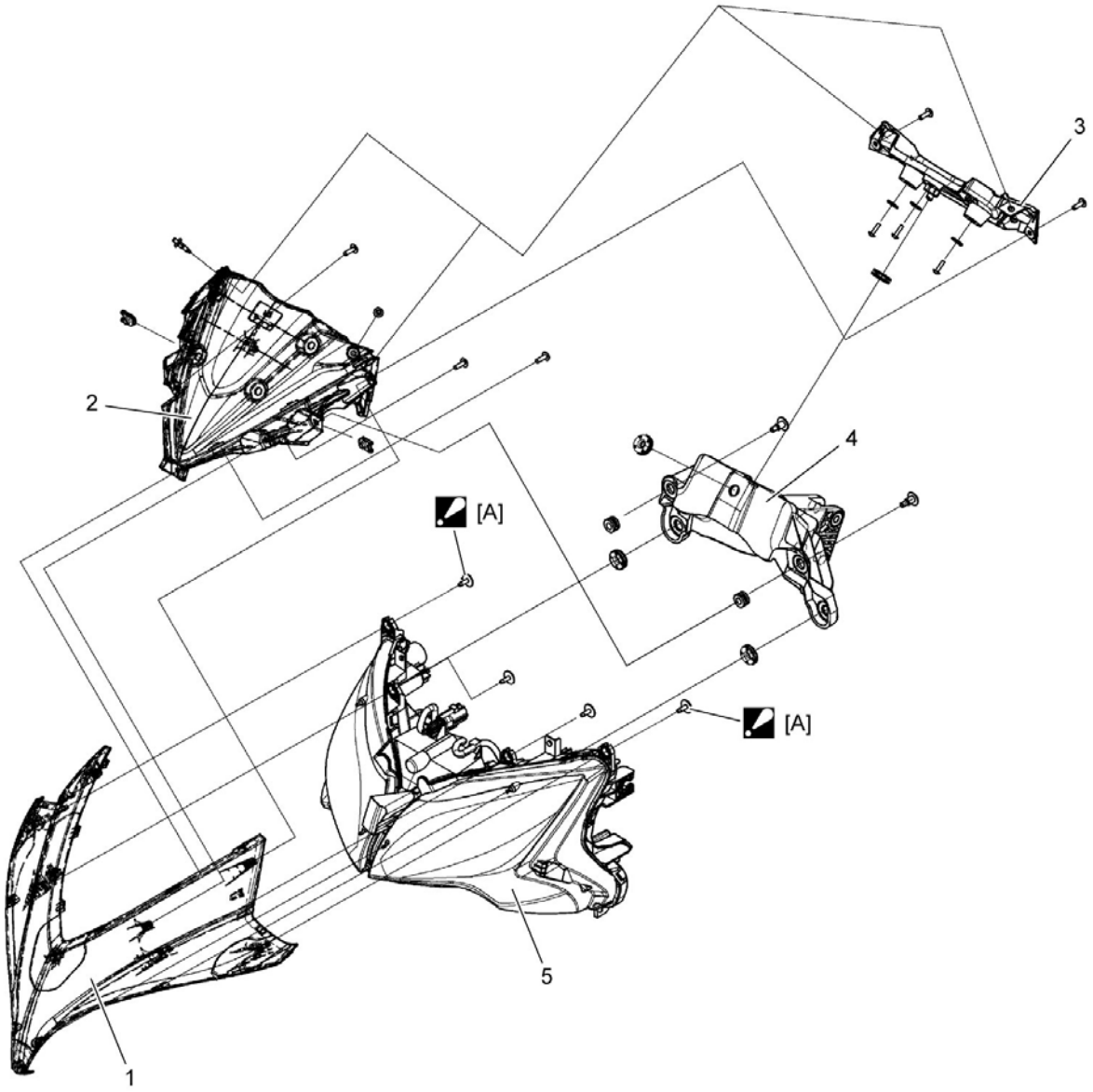

[A]:	Tighten the screw over the side cover.	3.	Meter rear panel
1.	Body cowling	4.	Cowling brace
2.	Meter front panel	5.	Headlight

Body Cowling Removal and Installation

Reference: Body Cowling Construction
Reference: Windscreen / Body Cowling / Side Cowling Construction (GSX-S1000F/FA)

GSX-S1000/A

Removal

1) Remove the headlight from the body cowling. ☞

2) Remove the front body cowling (1).

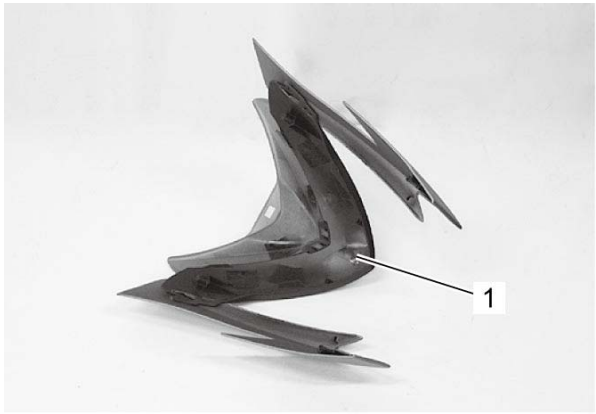

3) Disconnect the couplers (1).

4) Remove the rear body cowling (2).

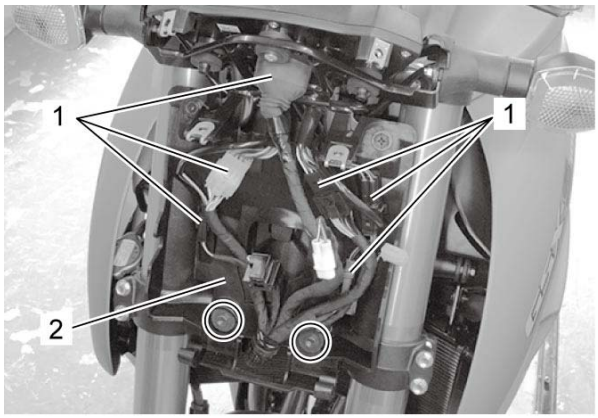

5) Remove the combination meter. ☞

6) Remove the meter bracket (1).

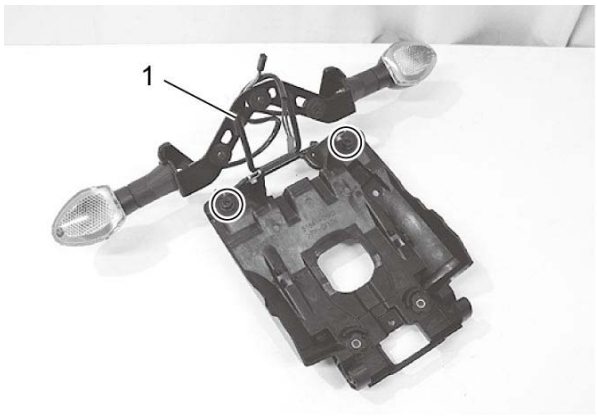

Installation

Install the body cowling in the reverse order of removal. Pay attention to the following points:

- Tighten the bolts (1) in order of “1” → “2”.

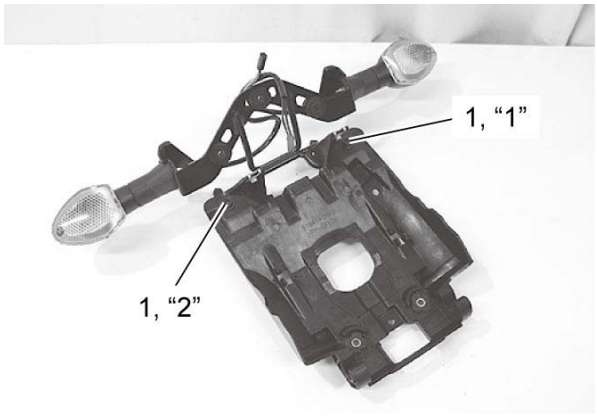

- Install the rear body cowling (1) and tighten the bolts (2) in order of “1” → “2”.

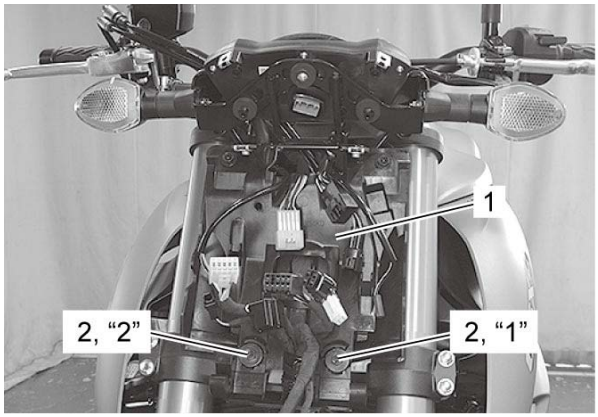

- Route the wiring harness. ☞
- Install the body cowling and headlight. ☞
- After installation of the headlight assembly, check the headlight aiming. ☞

GSX-S1000F/FA

Removal

1) Remove the side cowling assemblies. ☞

2) Remove the nuts (1) and washers (2).

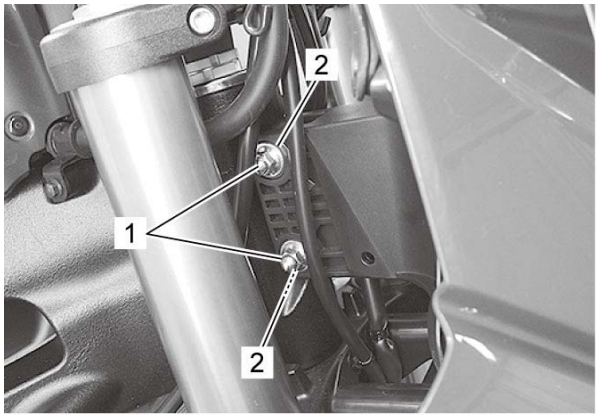

3) Remove the bolts (1) and washers (2).

4) Remove the body cowling assembly (3).

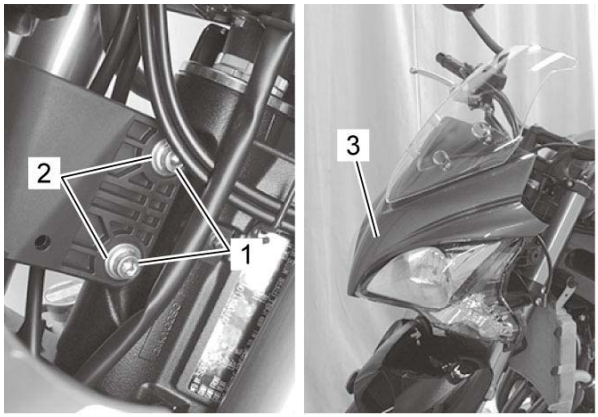

5) Remove the windscreen. ☞

6) Remove the combination meter. ☞

7) Remove the cowling brace (1).

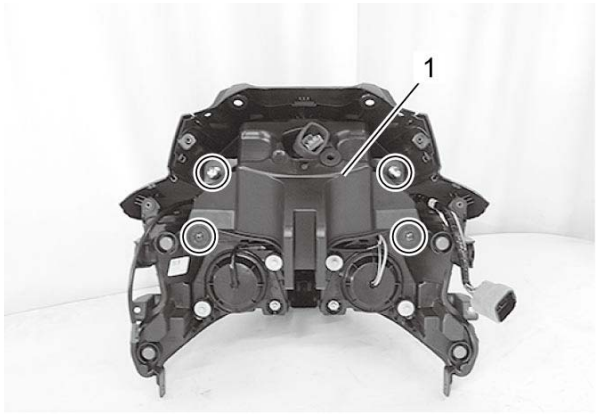

8) Remove the headlight. ☞

9) Remove the meter front panel (1) from the body cowling (2).

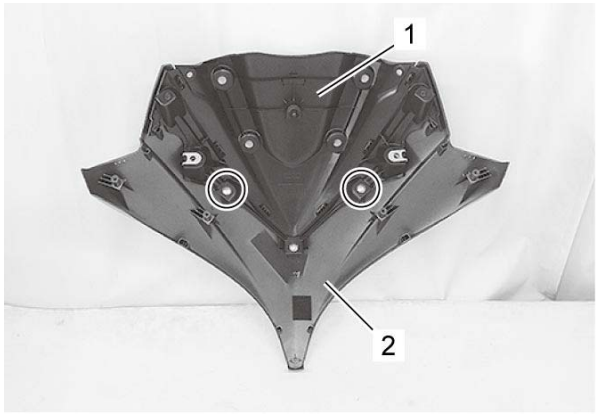

Installation

Install the body cowling in the reverse order of removal. Pay attention to the following points:

- Install the cowling brace (1) and tighten the screws (2).
- Tighten the screws (3) to the specified torque.

Tightening torque

Headlight screw (a): 2 N·m (0.20 kgf-m, 1.50 lbf-ft)

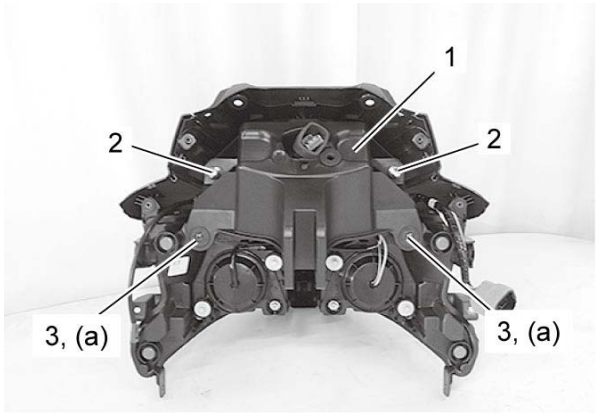

- Install the body cowling assembly (1) and tighten the nuts (2).

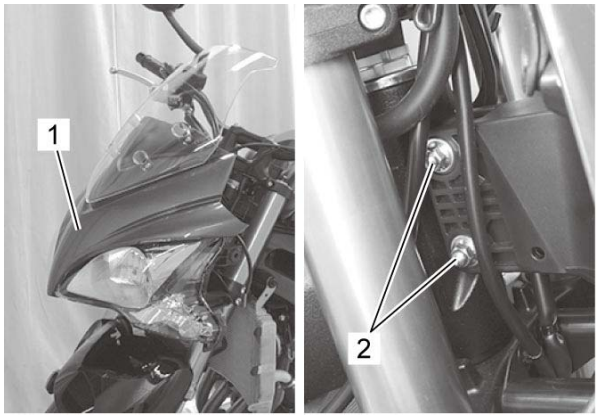

- After installation of the body cowling assembly, check the headlight aiming. ☞

Fastener Removal and Installation

Type 1

Removal

1) Depress the head of fastener center piece (1).

2) Pull out the fastener (2).

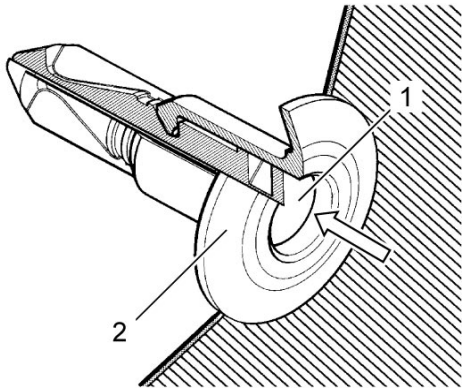

Installation

1) Let the center piece stick out toward the head so that the claws (1) closes.

2) Insert the fastener into the installation hole.

NOTE:
To prevent the claws (1) from damage, insert the fastener all the way into the installation hole.

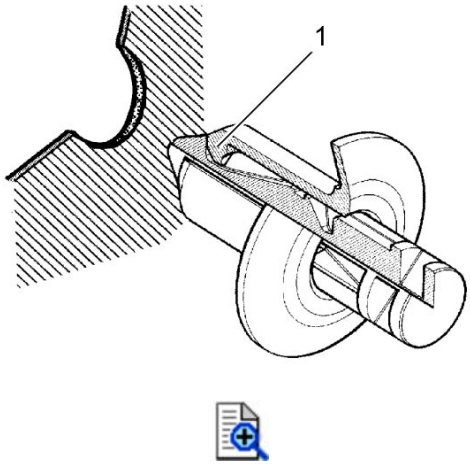

3) Push in the head of center piece until it becomes flush with the fastener outside face.

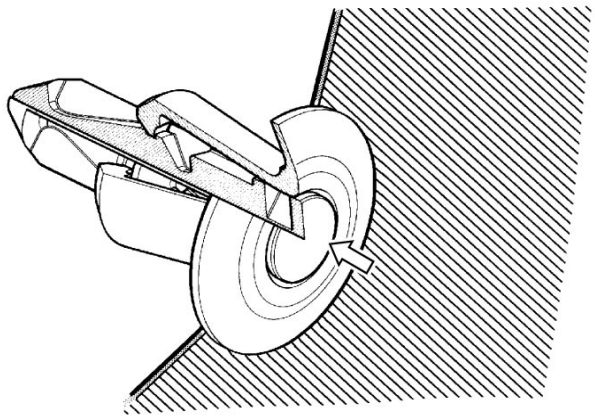

Type 2

Removal

1) Pry up the head of fastener center piece (1) with a screw driver.

2) Pull out the fastener (2).

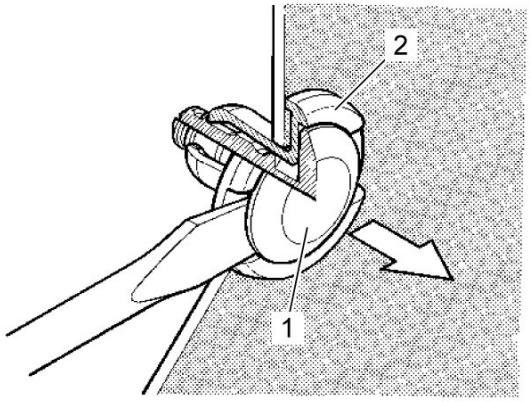

Installation

1) Insert the fastener into the installation hole.

> **NOTE:**
> **To prevent the claws (1) from damage, insert the fastener all the way into the installation hole.**

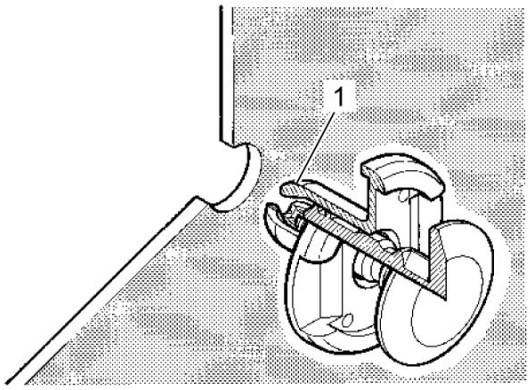

2) Push in the head of center piece.

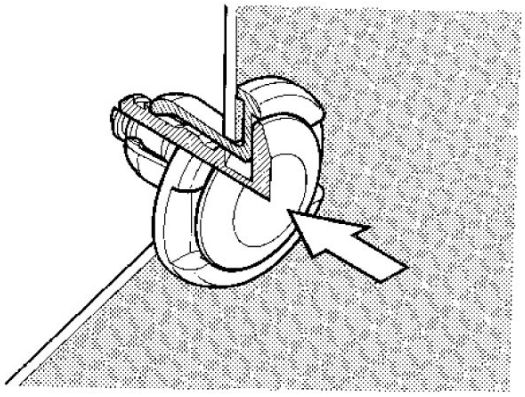

Frame Body Cover / Intake Cover Removal and Installation (GSX-S1000/A)

Reference: Frame Body Cover Construction (GSX-S1000/A)

NOTE:
To removal and installation the frame body cover and intake cover, the same procedures are applicable to both the right and left parts.

Removal

1) Remove the bolt (1).
2) Remove the fasteners (2).
3) Remove the frame body cover assembly (3).

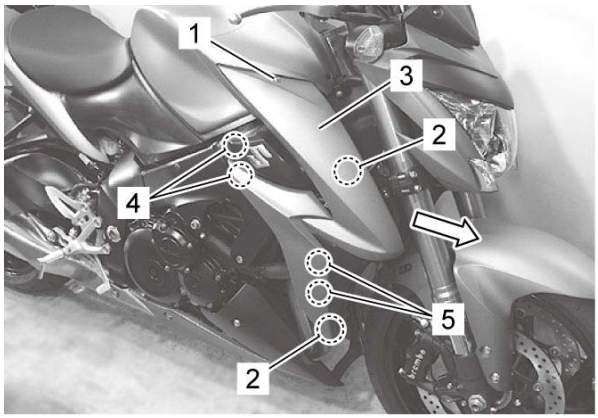

4.	Bushing
5.	Hooked point

4) Remove the intake cover (1).

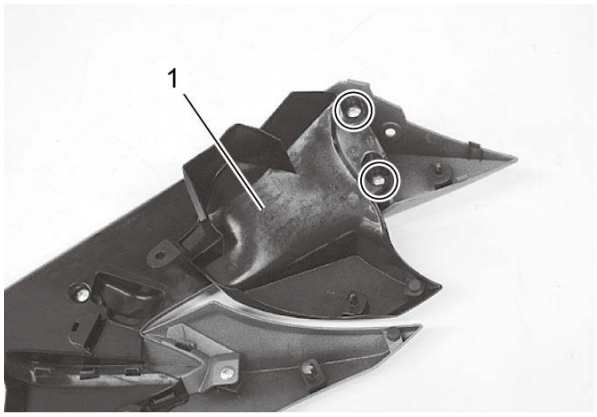

5) Remove the frame body inner cover (1).

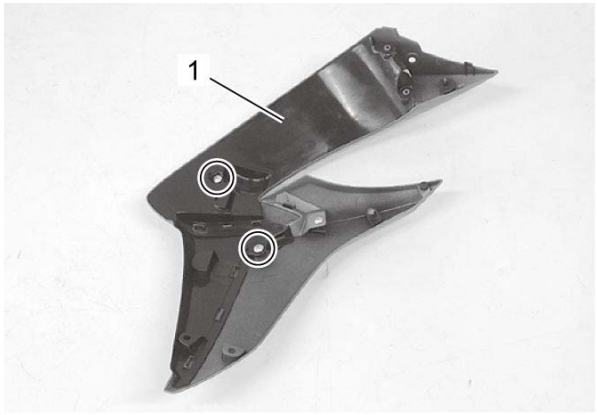

6) Remove the frame body lower cover (1).

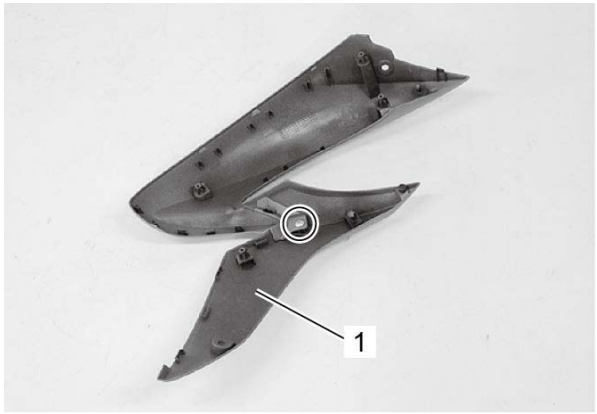

7) Remove the frame body cover bracket (1).

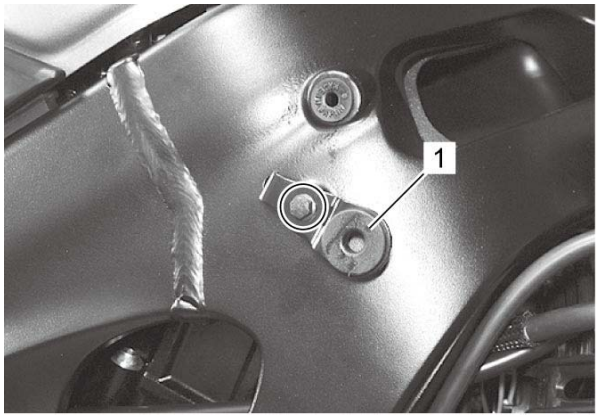

Installation

Install the intake cover and frame body cover in the reverse order of removal. Pay attention to the following points:

- Tighten the frame body cover bracket bolt (1) to the specified torque.

Tightening torque

Frame body cover bracket bolt (a): 10 N·m (1.0 kgf-m, 7.5 lbf-ft)

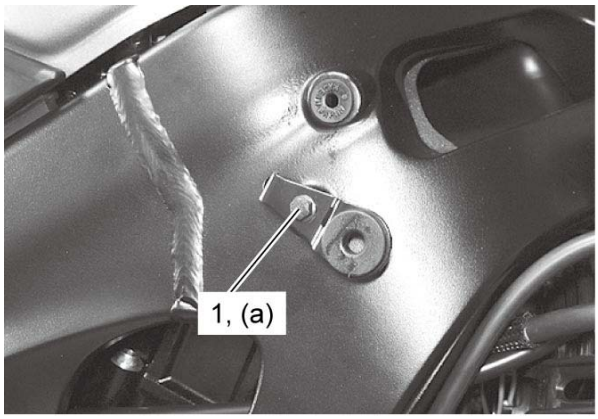

- Tighten the frame body cover bolt (1) to the specified torque.

Tightening torque

Frame body cover bolt (a): 5.5 N·m (0.56 kgf-m, 4.05 lbf-ft)

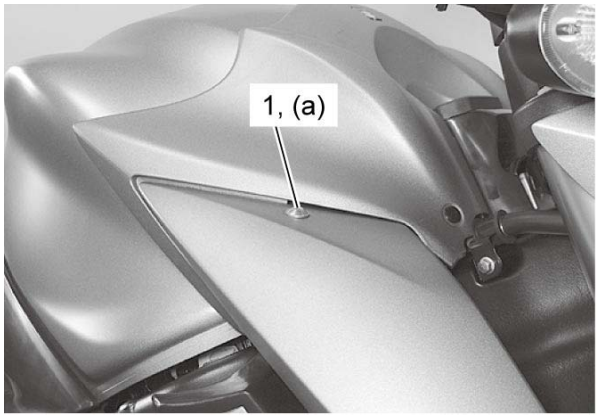

Frame Body Cover Construction (GSX-S1000/A)

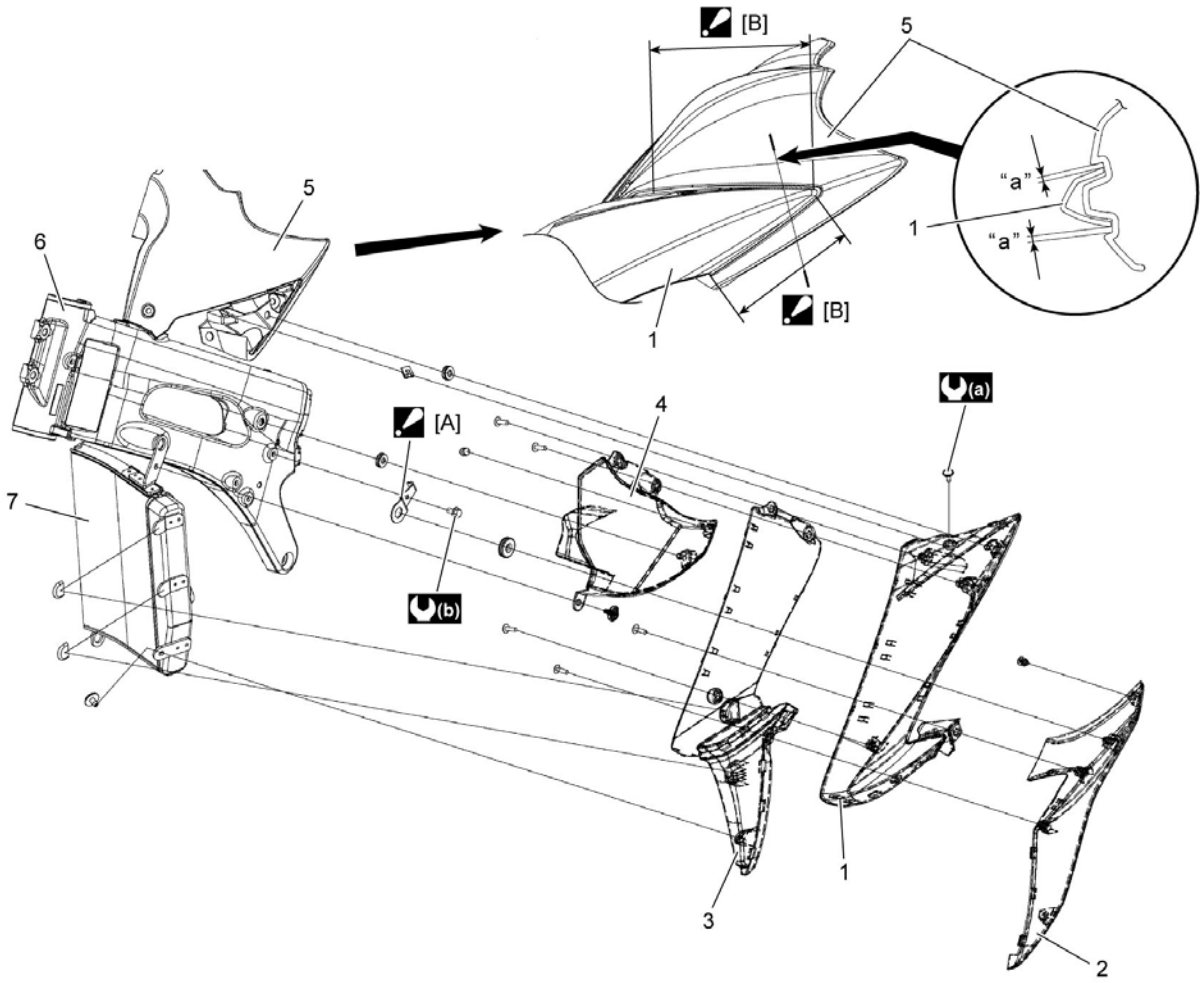

[A]:	Insert the convex part of the frame body cover bracket to the hole of the frame.	5.	Fuel tank upper cover
[B]:	Inspect the clearance in this area.	6.	Frame
1.	Frame body cover	7.	Radiator
2.	Frame body lower cover	"a":	1.2 – 3.2 mm (0.05 – 0.13 in)
3.	Frame body inner cover	(a):	5.5 N·m (0.56 kgf-m, 4.05 lbf-ft)
4.	Intake cover	(b):	10 N·m (1.0 kgf-m, 7.5 lbf-ft)

Frame Cover Construction

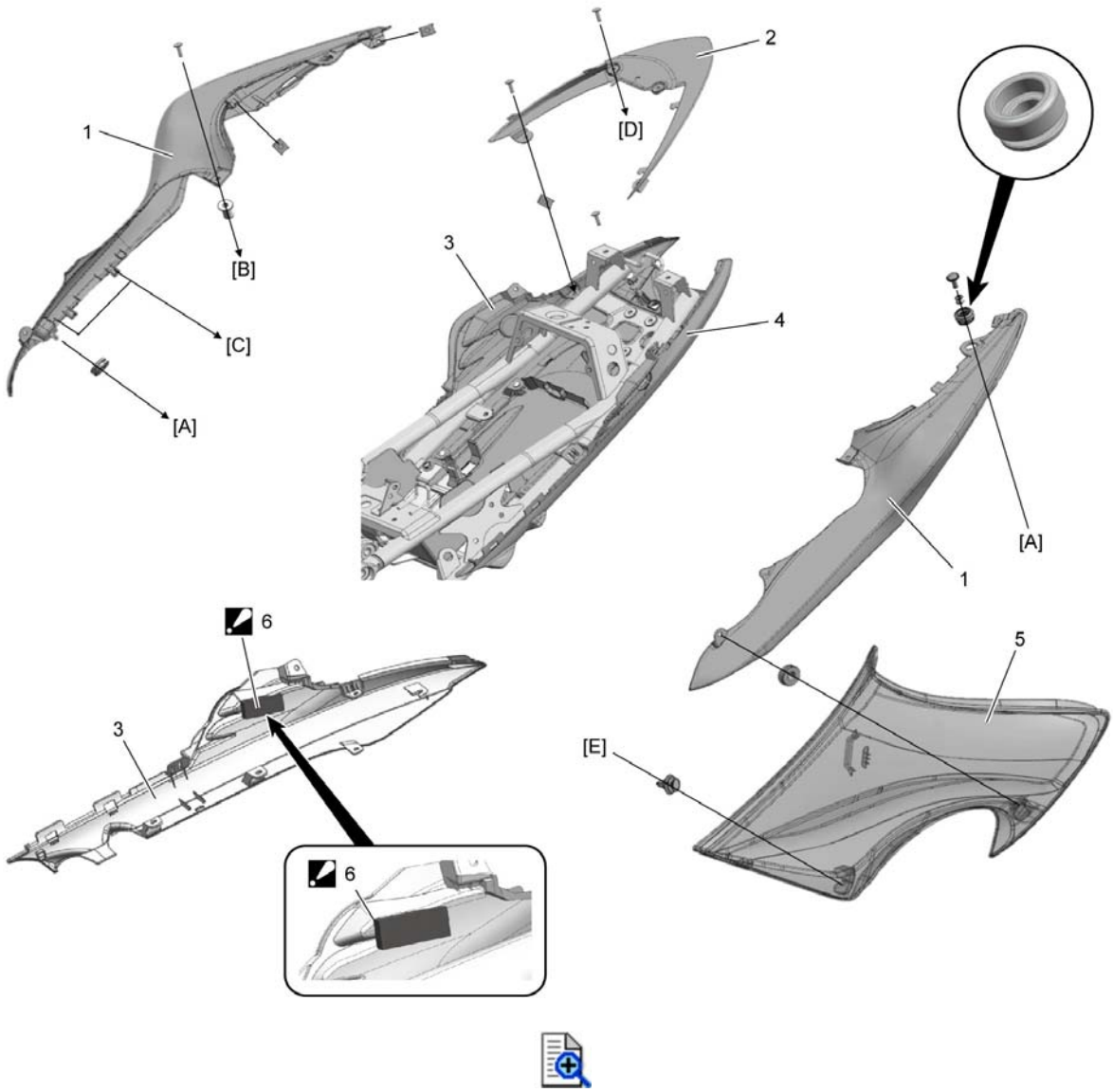

[A]:	To seat rail	2.	Frame center cover
[B]:	To seat bracket	3.	Right frame rear lower cover
[C]:	To frame rear lower cover	4.	Left frame rear lower cover
[D]:	To frame rear upper cover	5.	Frame front cover
[E]:	To fuel tank	6.	Turn signal relay cushion : Sticking the cushion to the end of round edge.
1.	Frame rear upper cover		

Frame Cover Cushion Construction

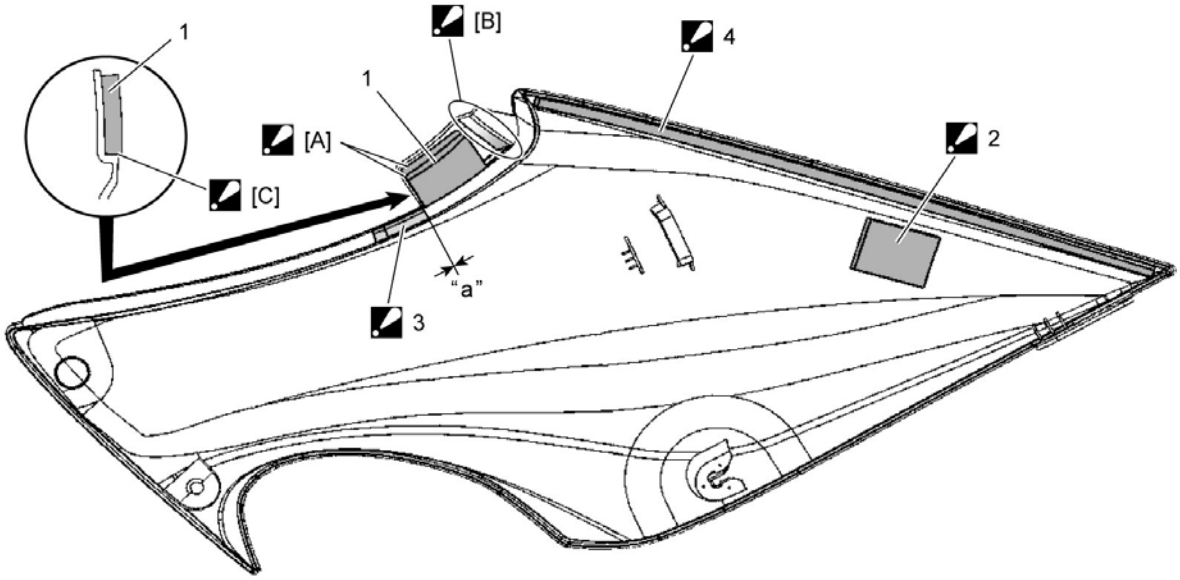

[A]:	Do not protrude the velcro fastening from end.	2.	Velcro fastening : Sticking the velcro fastening aligning with the emboss line.
[B]:	Do not sticking the velcro fastening onto convex part.	3.	Frame cover front cushion No. 2 : Sticking the cushion aligning with the end.
[C]:	Sticking the cushion aligning with the corner.	4.	Frame cover front cushion No. 3 : Sticking the cushion aligning with the emboss line.
1.	Velcro fastening	"a":	0 – 2 mm (0 – 0.08 in)

Frame Front Cover Removal and Installation

Reference: Fuel Tank Cover / Frame Front Cover Construction

NOTE:
To removal and installation the frame front cover, the same procedures are applicable to both the right and left parts.

Removal

1) Remove the front seat. ☞

2) Remove the frame front cover (1).

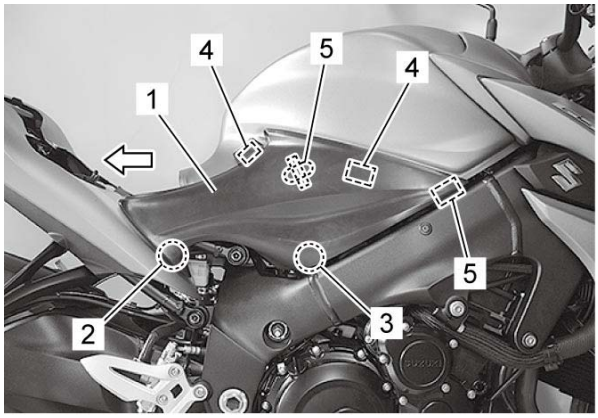

2.	Bushing	4.	Velcro fastening position
3.	Clip	5.	Hooked point

Installation

Install the frame front cover in the reverse order of removal.

Frame Rear Upper Cover / Frame Center Cover Removal and Installation

Reference: Frame Cover Construction

NOTE:
To removal and installation the frame rear upper cover, the same procedures are applicable to both the right and left parts.

Removal

1) Remove the front seat. ☞

2) Remove the frame front covers. ☞

3) Remove the screws (1).

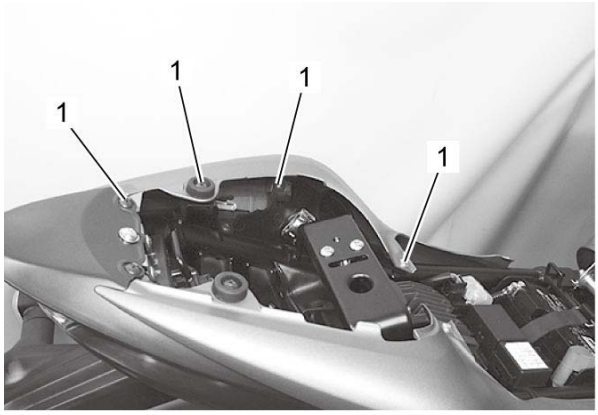

4) Remove the frame rear upper cover (1).

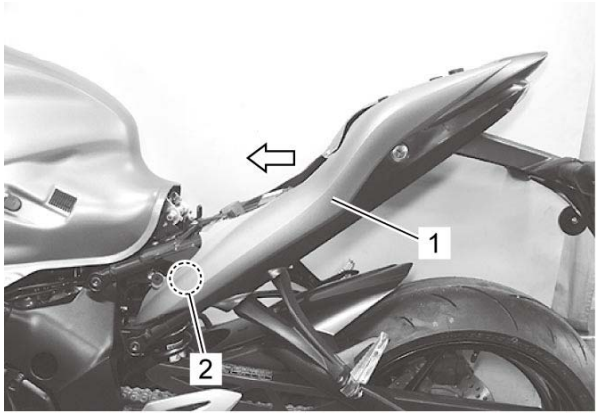

2.	Bushing

5) Remove the frame center cover (1).

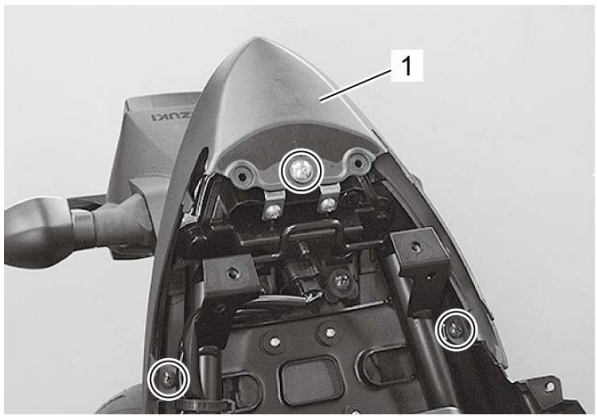

Installation

Install the frame center cover and frame rear upper cover in the reverse order of removal. Pay attention to the following point:

- Tighten the rear combination light bolt (1) to the specified torque.

Tightening torque

Rear combination light bolt (a): 5.5 N·m (0.56 kgf-m, 4.05 lbf-ft)

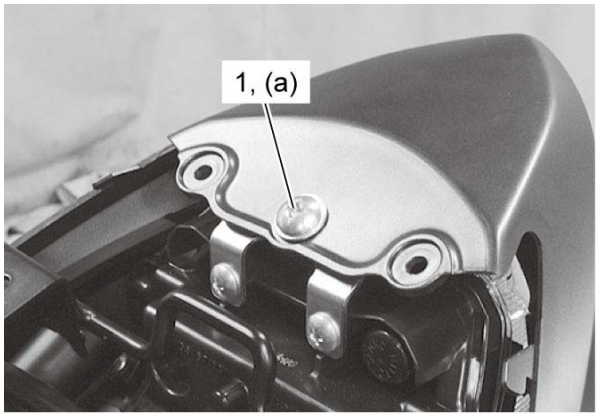

Front Fender Construction

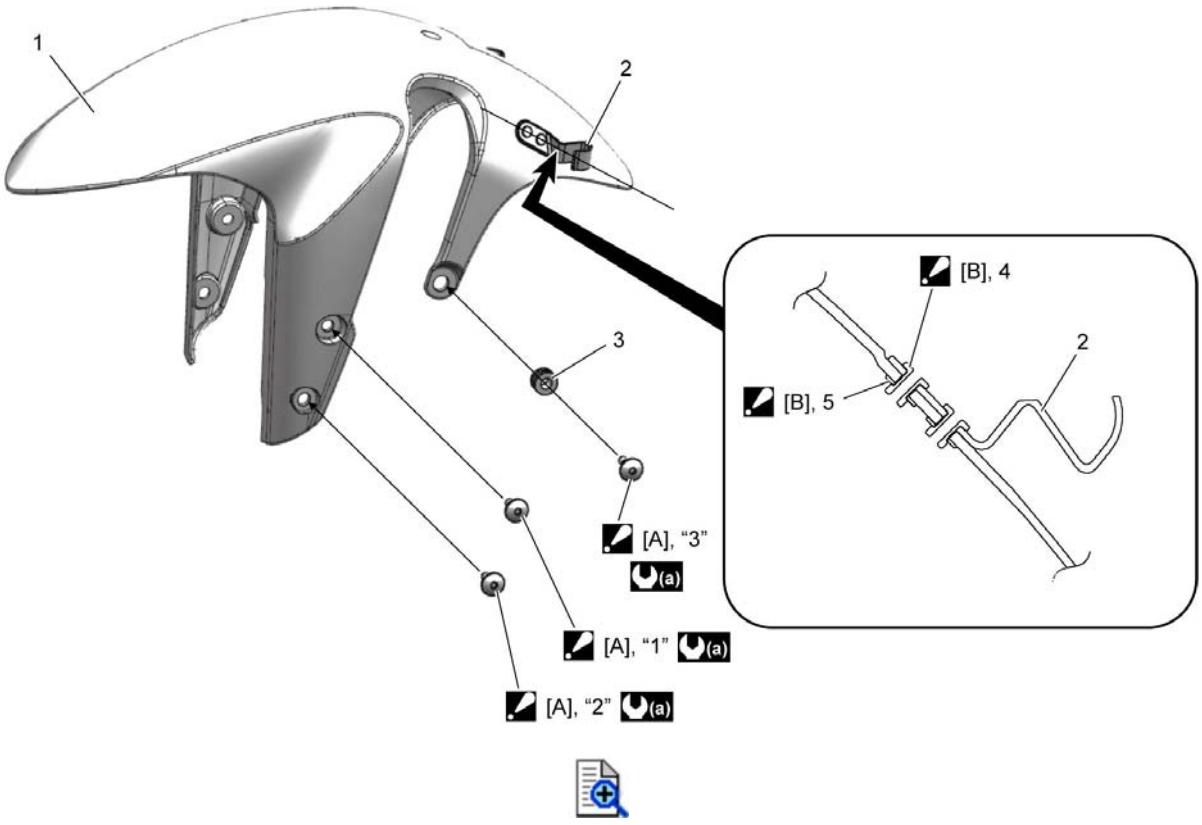

[A]:	Tighten the screws in order of "1" → "2" → "3".	3.	Front fender rear cushion
[B]:	Install the fender, clamp (outside) and washer (inside) firmly. (No clearance)	4.	Rivet
1.	Front fender	5.	Washer
2.	Front brake hose clamp	(a):	12 N·m (1.2 kgf-m, 9.0 lbf-ft)

Front Number Plate Construction (If Equipped)

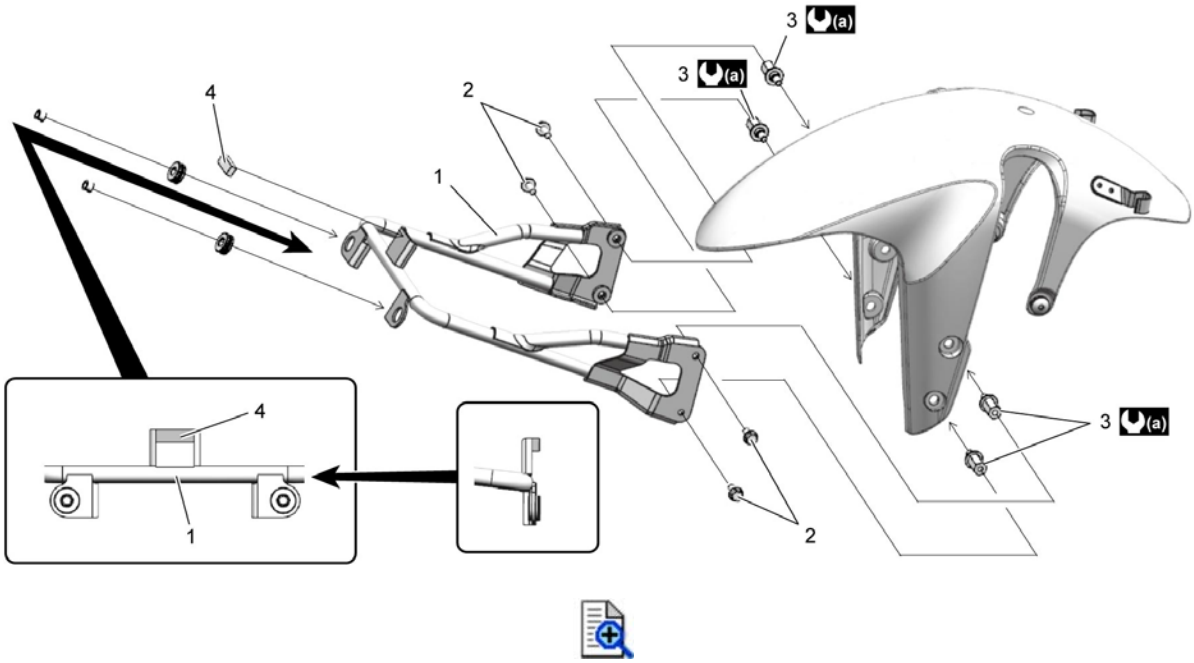

1.	Number plate bracket	4.	Front number cushion
2.	License plate bracket bolt	(a):	12 N·m (1.2 kgf-m, 9.0 lbf-ft)
3.	Front number plate bolt		

Fuel Tank Cover / Frame Front Cover Construction

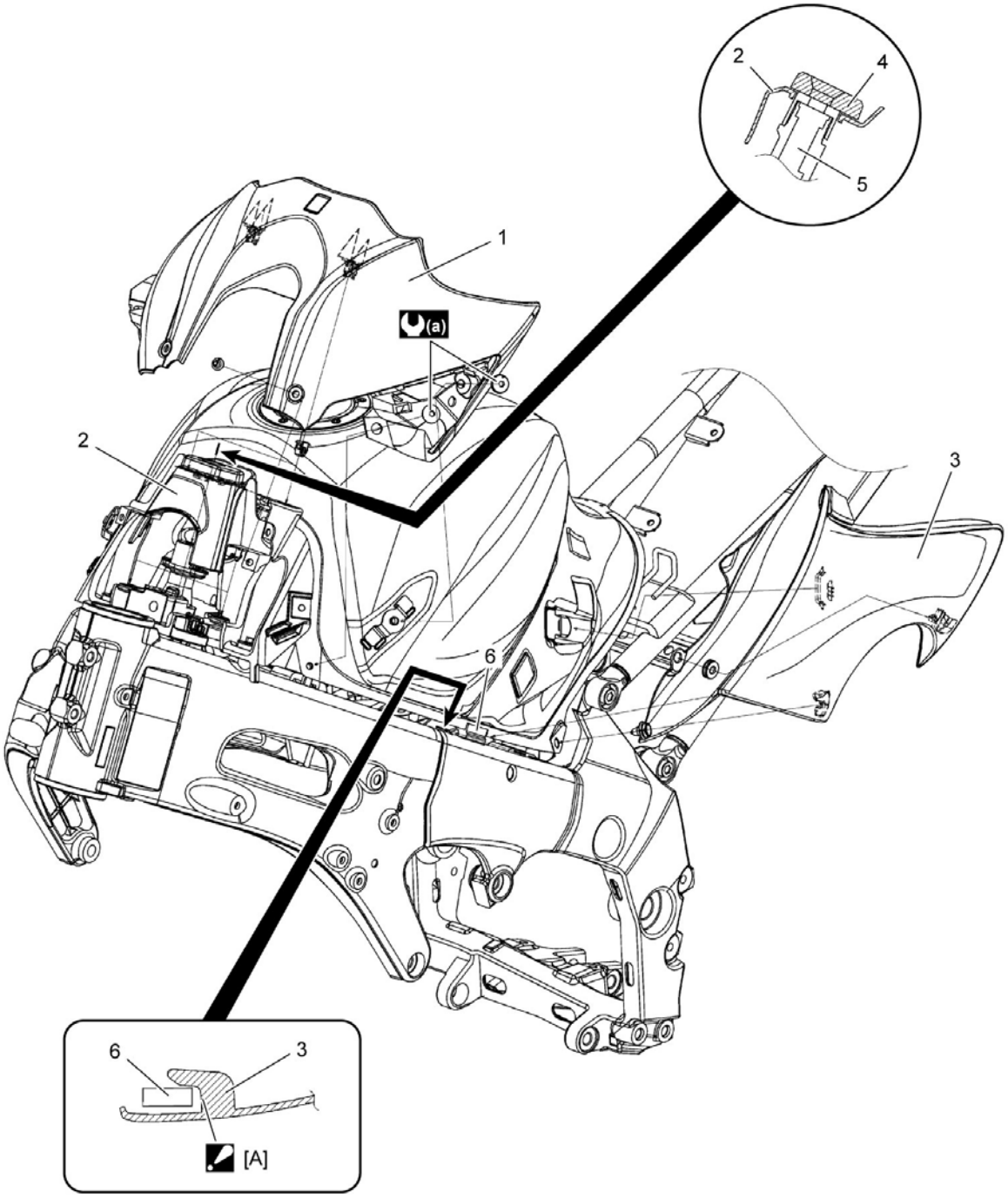

[A]:	Do not contact the cushion to the front frame cover.	4.	Immobilizer antenna (if equipped)
1.	Fuel tank upper cover	5.	Ignition switch
2.	Fuel tank lower cover	6.	Cushion

3.	Frame front cover	(a) :	10 N·m (1.0 kgf-m, 7.5 lbf-ft)

Fuel Tank Cover Cushion Construction

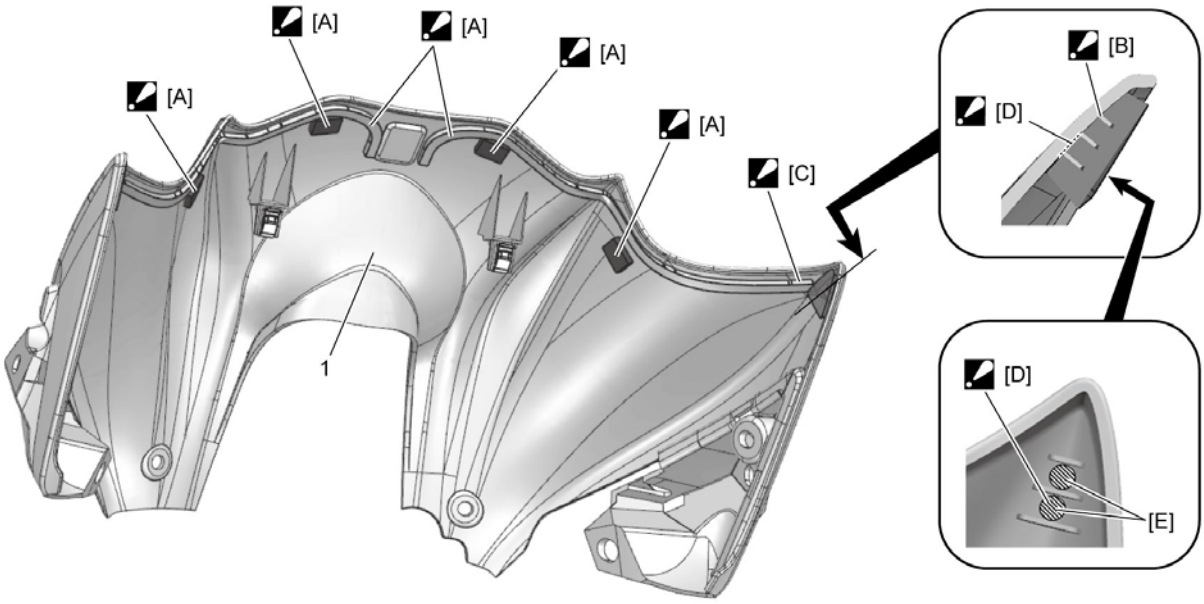

[A]:	Sticking the cushion aligning with the emboss line.	[D]:	Apply adhesive agent in this area.
[B]:	Align the groove of the cushion to the rib of the fuel tank upper cover.	[E]:	Either one side
[C]:	Align the cushion outside.	1.	Fuel tank upper cover

Fuel Tank Upper Cover / Fuel Tank Lower Cover Removal and Installation

Reference: Fuel Tank Cover / Frame Front Cover Construction

Removal

1) Remove the following parts.
- Frame body covers (GSX-S1000/A): ☞
- Side cowling assemblies (GSX-S1000F/FA): ☞

2) Remove the fasteners (1), screws (2) and bolts (3).

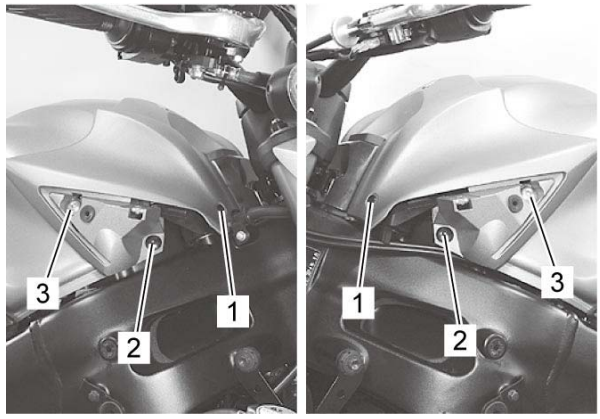

3) Remove the fuel tank upper cover (1).

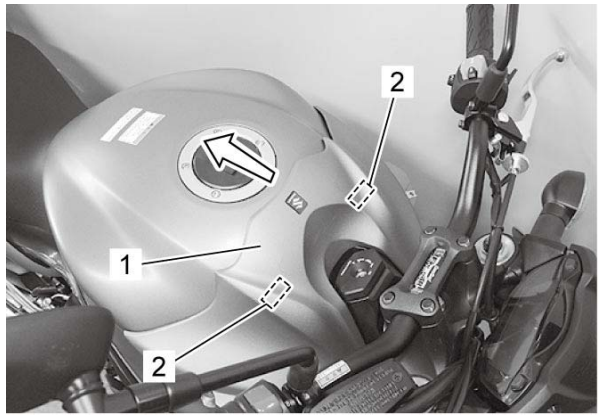

2.	Clip

4) Remove the fuel tank lower cover (1) and disconnect the immobilizer antenna coupler (2) (If equipped).

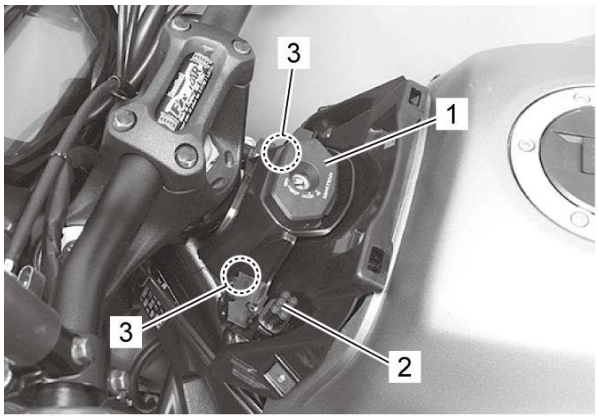

3.	Bushing

5) Remove the immobilizer antenna or ignition switch cover. Refer to ***Immobilizer Antenna Removal and Installation (With Immobilizer System)*** and ***Ignition Switch Cover Removal and Installation (Without Immobilizer System)***.

Installation

Install the fuel tank lower cover and fuel tank upper cover in the reverse order of removal. Pay attention to the following point:

- Tighten the fuel tank cover upper screws (1) and fuel tank cover upper bolts (2) to the specified torque.

Tightening torque

Fuel tank cover upper screw (a): 10 N·m (1.0 kgf-m, 7.5 lbf-ft)
Fuel tank cover upper bolt (b): 10 N·m (1.0 kgf-m, 7.5 lbf-ft)

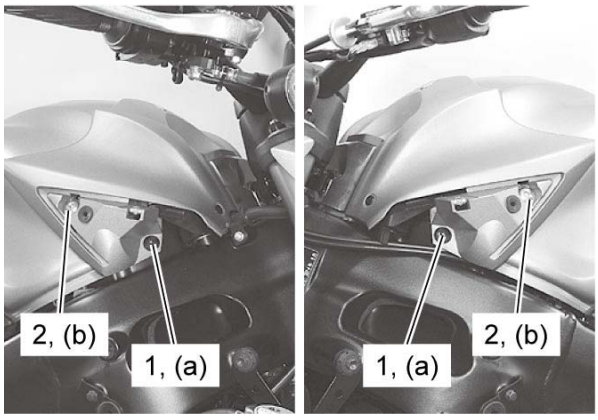

Rear Fender Construction

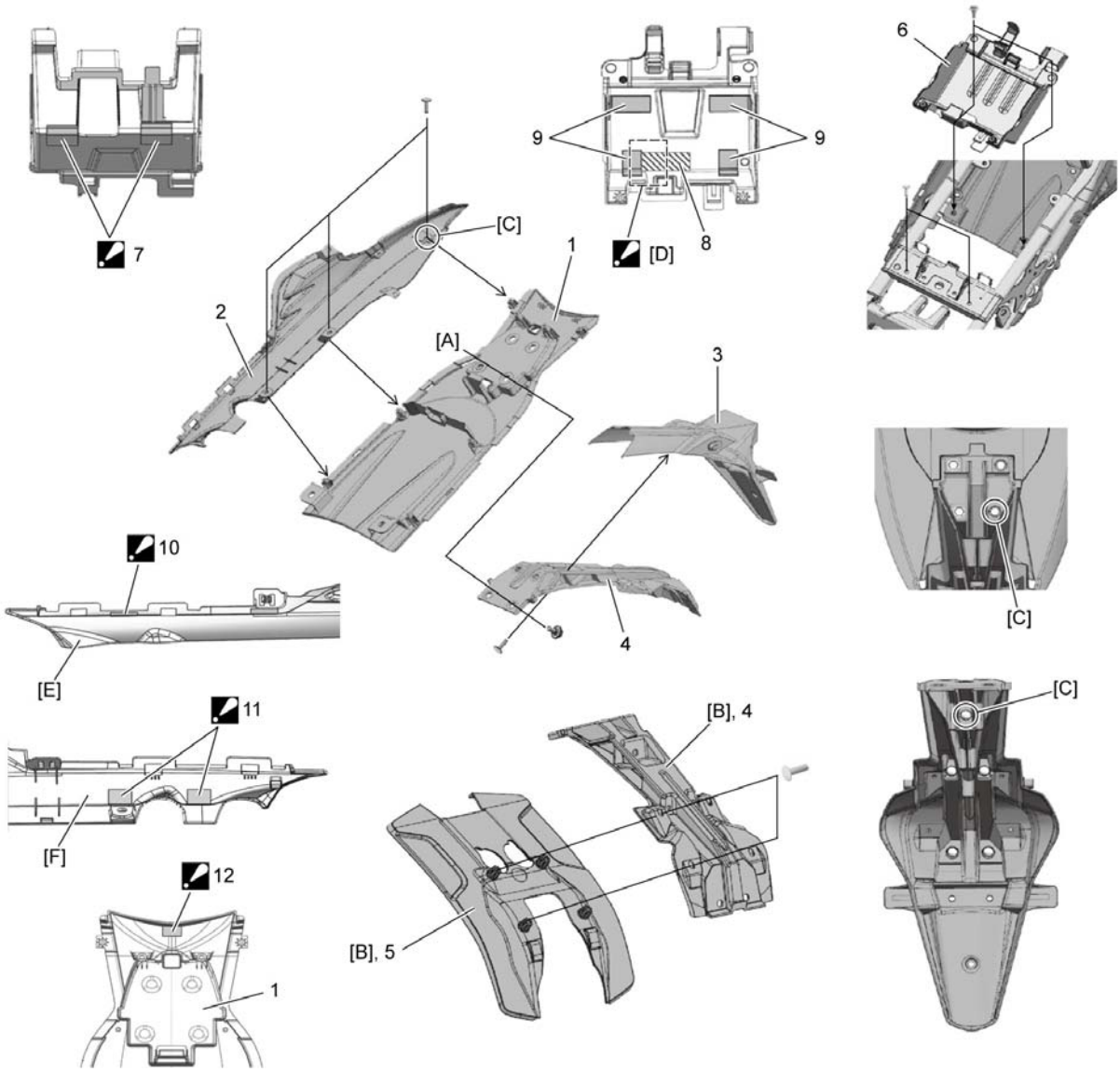

[A]:	To seat rail	4.	Rear inner fender
[B]:	For Australia	5.	Rear guard (If equipped)
[C]:	Datum point	6.	Electric parts holder
[D]:	Do not overlap the cushions.	7.	Electric parts holder cushion : Sticking the cushion aligning with the emboss line.
[E]:	Outside of the frame rear lower cover	8.	Battery box cushion
[F]:	Inside of the frame rear lower cover	9.	Battery protector

1.	Rear fender front	 10.	Frame cover tape : Sticking the tape aligning with the emboss line.
2.	Frame rear lower cover	 11.	Frame cover lower cushion : Sticking the cushion aligning with the emboss line.
3.	Rear outer fender	 12.	Rear fender front cushion : Sticking the cushion aligning with the emboss line.

Rear Fender Front Removal and Installation

Reference: Rear Fender Construction

Removal

1) Remove the frame front covers. ☞

2) Remove the frame rear upper cover and frame center cover. ☞

3) Remove the rear fender rear. ☞

4) Remove the rear combination light. ☞

5) Remove the seat lock cable (1).

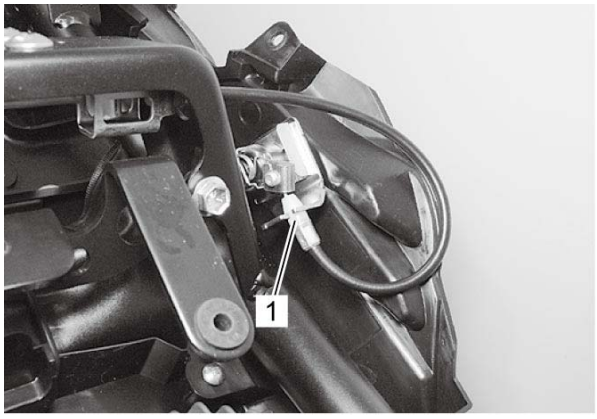

6) Disconnect the battery terminals. ☞

7) Remove the starter relay (1), fuse box (2) and battery band (3).

8) Remove the bolts (4).

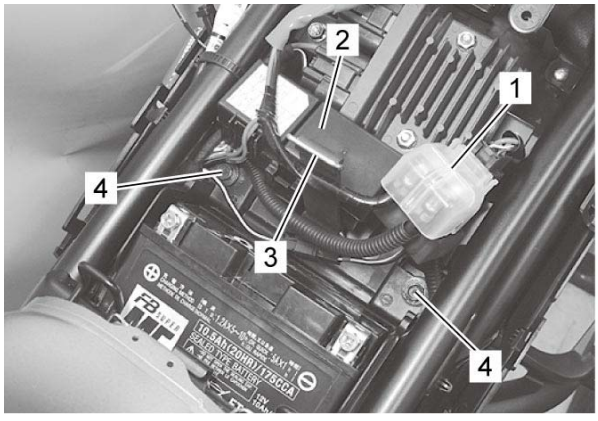

9) Remove the rear fender front (1) with frame rear lower covers (2).

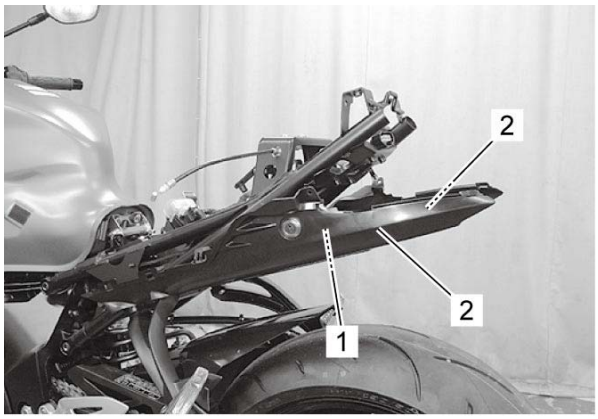

10) Remove the seat lock assembly (1) and frame rear covers (2).

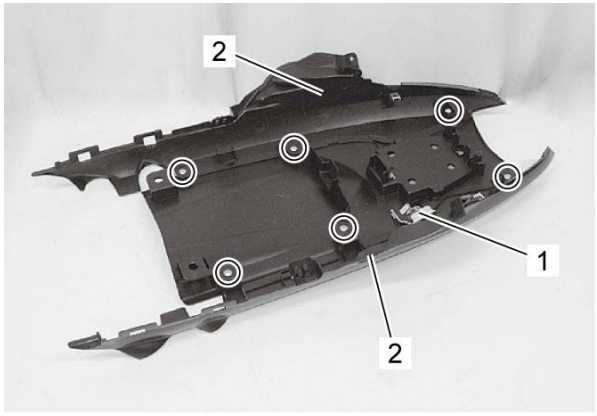

Installation

Install the rear fender front in the reverse order of removal. Pay attention to the following points:

- Install the seat lock assembly (1). ☞

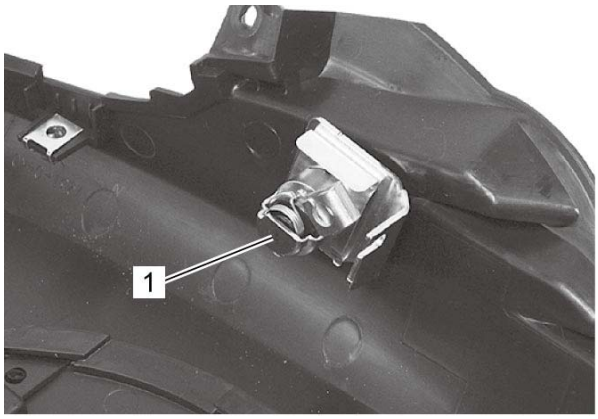

- Connect the battery terminals. ☞
- Install the battery band (1), fuse box (2) and starter relay (3).

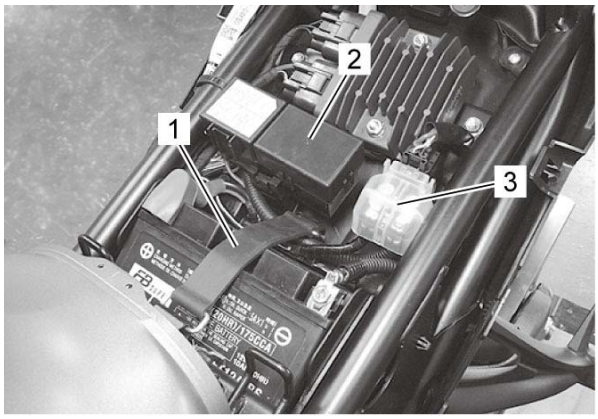

- Install the rear combination light. ☞
- Install the rear fender rear. ☞

Rear Fender Rear Removal and Installation

Reference: Rear Fender Construction

Removal

1) Remove the right frame rear upper cover. ☞

2) Disconnect the license plate light lead wire coupler (1) and rear turn signal light lead wire couplers (2).

3) Release the clamps (3).

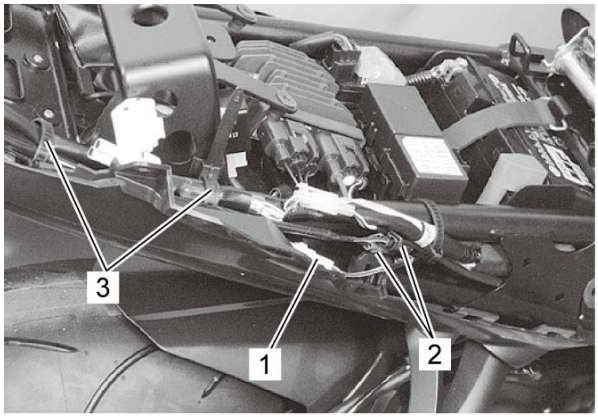

4) Remove the bolts (1).

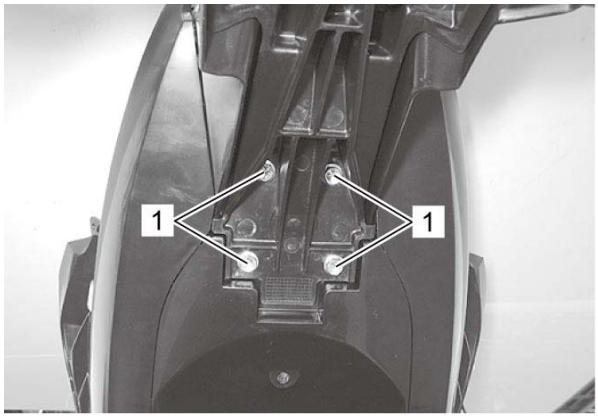

5) Remove the rear fender rear (1).

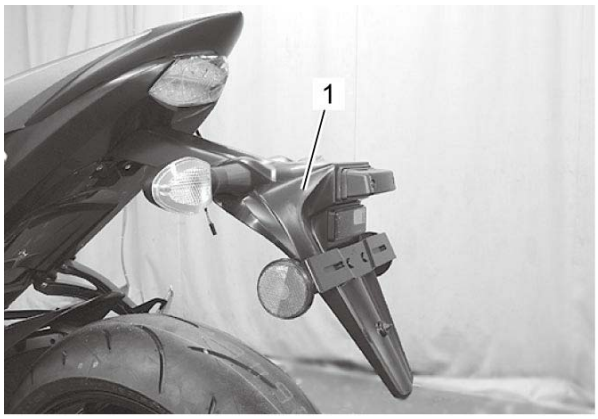

6) Remove the rear inner fender (1).

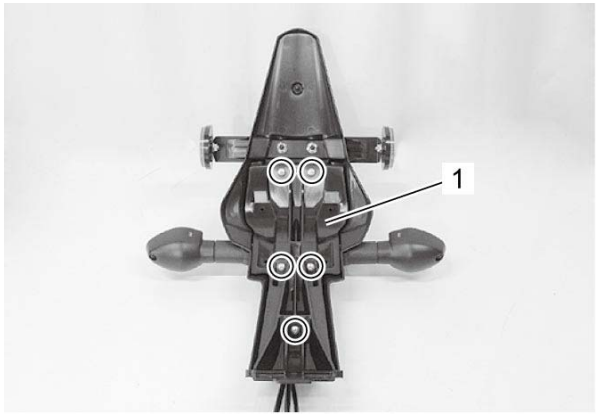

Installation

Install the rear fender rear in the reverse order of removal. Pay attention to the following points:

- Tighten the screws (1).

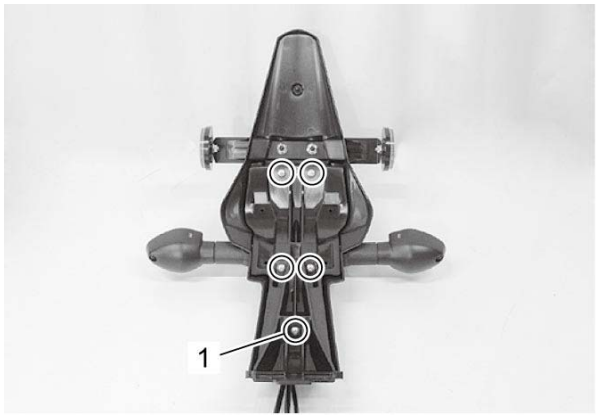

- Tighten the rear fender rear bolts (1).

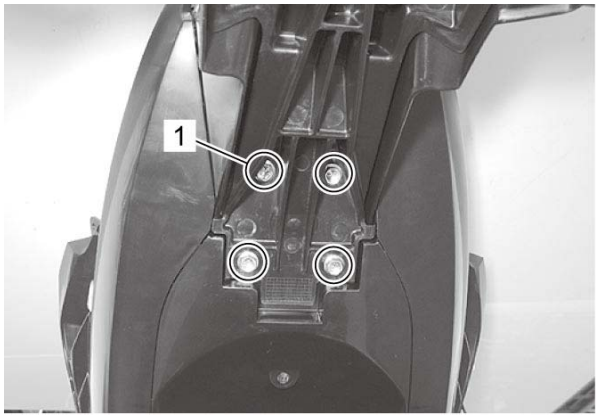

- Route the turn signal light lead wires and license plate light lead wire correctly. Refer to ***Rear Lighting System Construction***.

Seat Lock Cable Routing Diagram

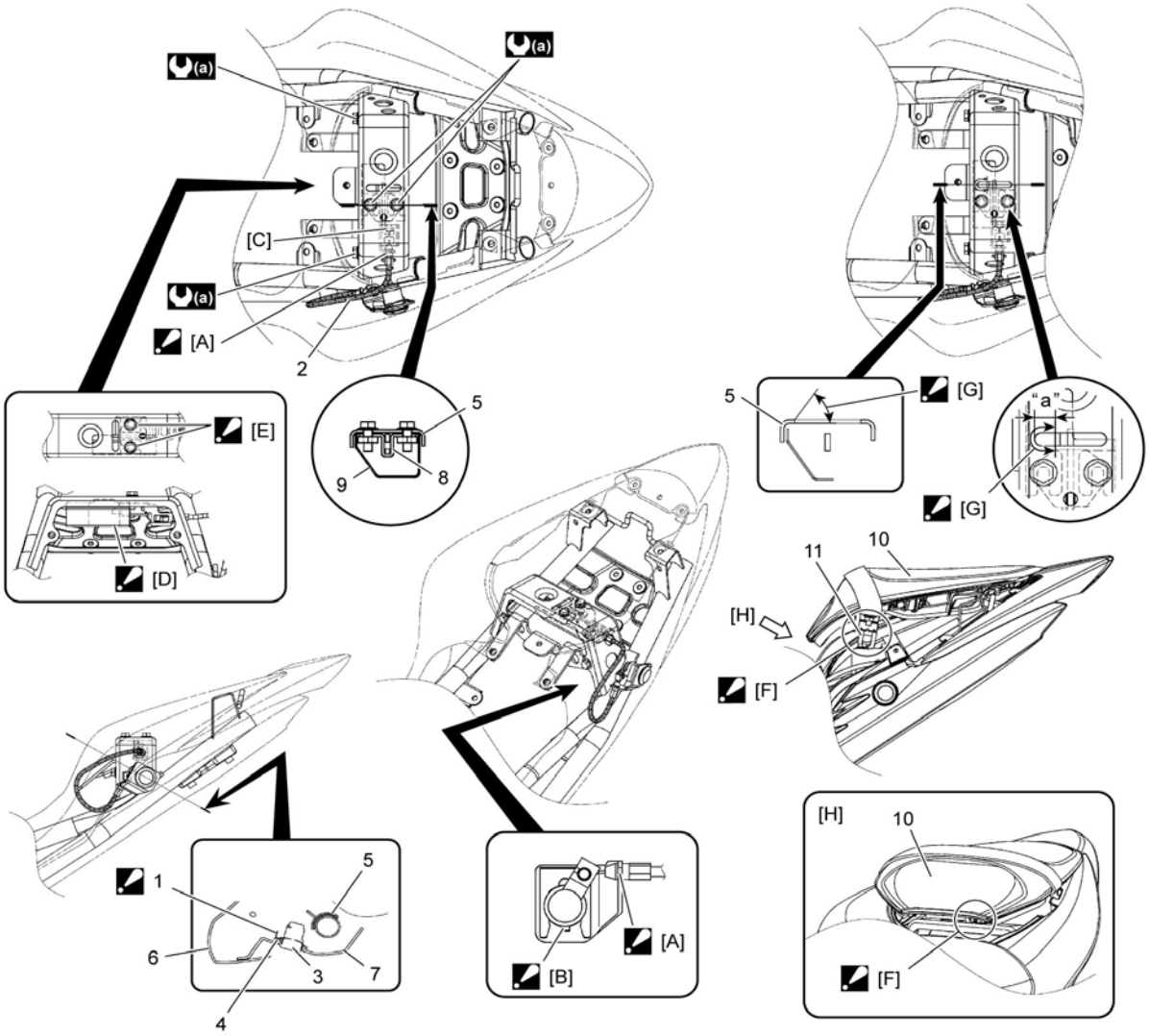

[A]:	Set the seat lock cable firmly.	4.	Seat lock cable guide
[B]:	Align the rib of seat lock and groove of each part.	5.	Seat rail
[C]:	Spherical cable end	6.	Left frame rear upper cover
[D]:	Install the seat lock guard between the seat rail bracket and striker support bracket after temporarily tightening striker support bracket.	7.	Left frame rear lower cover
[E]:	Install the seat lock guard securely.	8.	Striker support bracket
[F]:	Check that the seat striker entered the hole of seat rail bridge and install the rear seat by pushing it to rearward.	9.	Seat lock guard

[G]:	Contact the seat striker and the hole of seat rail bridge when installing the rear seat.	10.	Rear seat
[H]:	VIEW [H]	11.	Seat striker
1.	Seat lock plate : Install the seat lock plate behind of the seat lock cable guide.	“a”:	10 mm (0.39 in)
2.	Seat lock cable	(a):	9 N·m (0.92 kgf-m, 6.65 lbf-ft)
3.	Seat lock		

Seat Removal and Installation

Rear Seat

Removal

1) Unlock the rear seat with the ignition key (1).

2) Remove the rear seat (2).

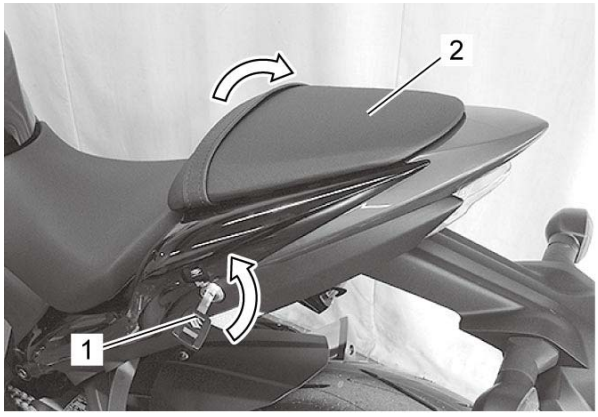

Installation

Slide the seat hooks into the seat hook retainers and push down firmly until the seat snaps into the locked position.

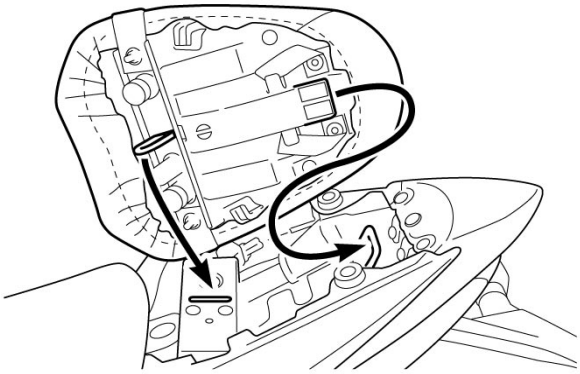

Front Seat

Removal

1) Remove the rear seat.

2) Remove the bolt (1) and front seat (2).

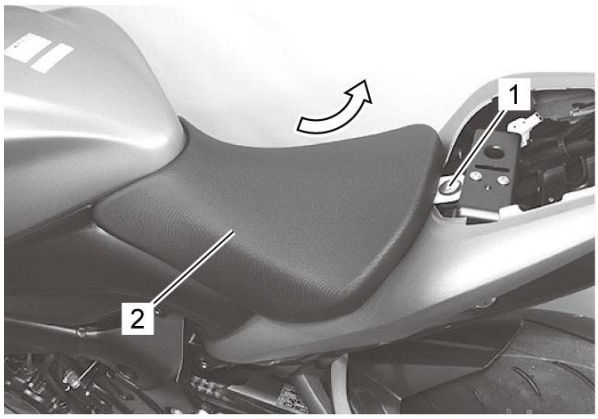

Installation

1) Slide the seat hooks into the seat hook retainers on frame.

2) Tighten the bolt securely.

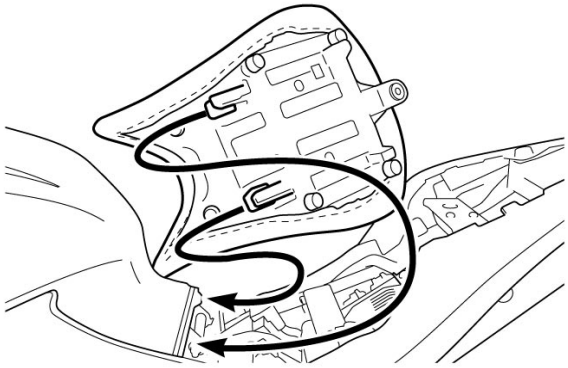

Side Cowling Assembly Removal and Installation (GSX-S1000F/FA)

Reference: Windscreen / Body Cowling / Side Cowling Construction (GSX-S1000F/FA)

Right Side Cowling Assembly

Removal

1) Remove the fastener (1) and screws (2).

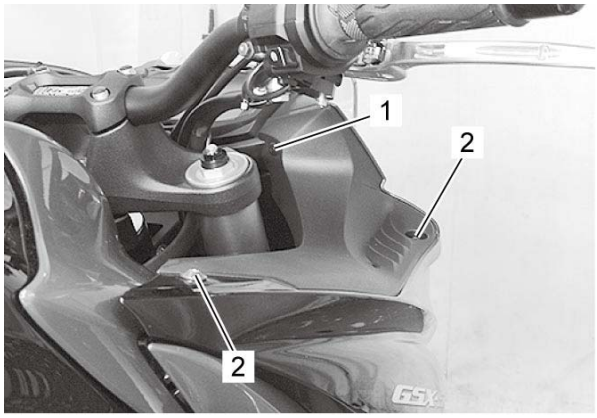

2) Place a rag between the fuel tank upper cover (1) and right meter panel (2).

3) Move the right meter panel (2) and right side cover (3) and position the part “a” of right meter panel (2) over the right side cover (3).

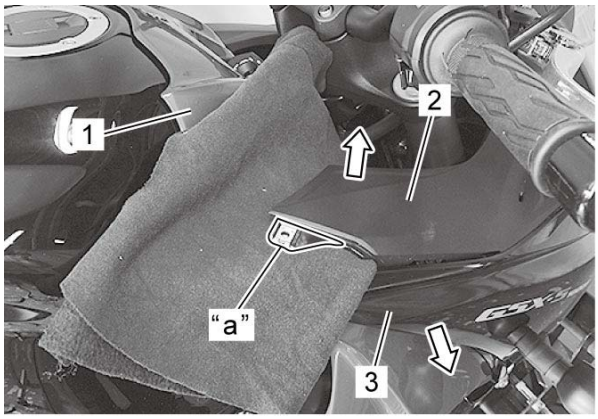

4) Remove the right meter panel (1) to backward.

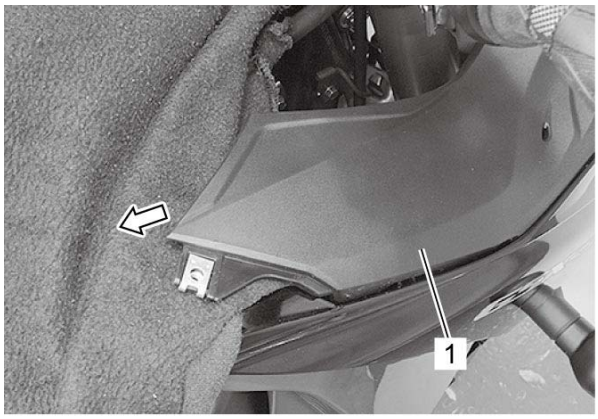

5) Release the clamp (1) and disconnect the main harness No. 2 coupler (2) and right turn signal light coupler (3).

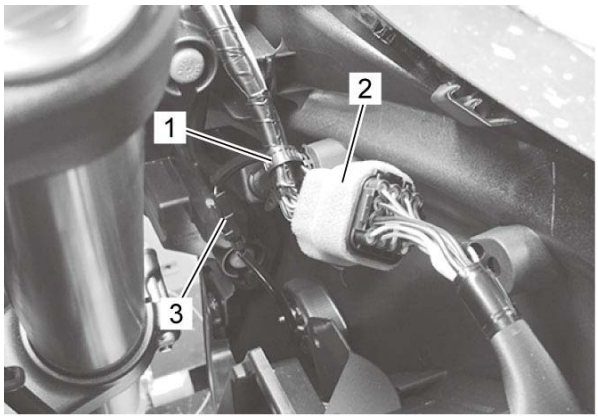

6) Remove the fastener (1).

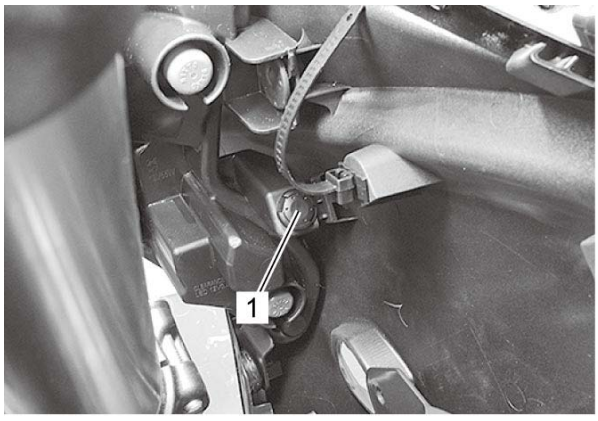

7) Remove the screws (1).

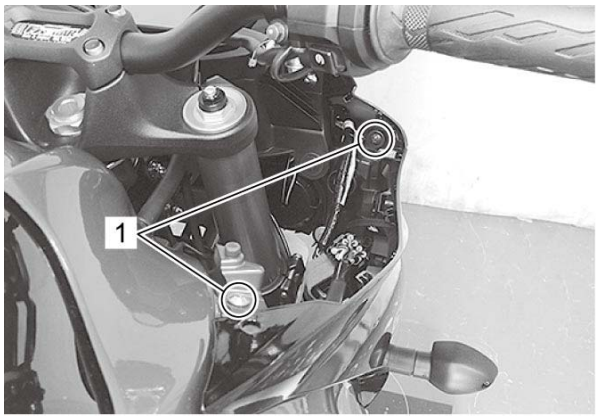

8) Remove the fastener (1).

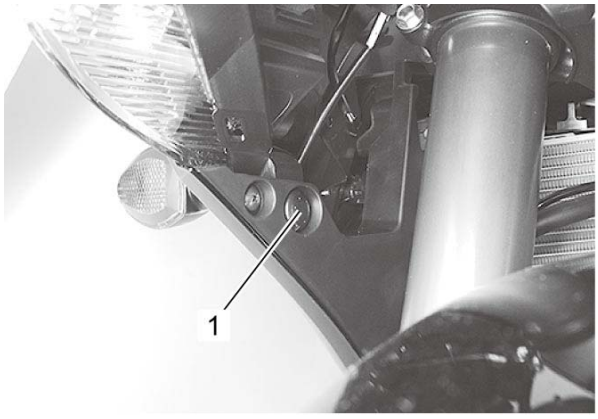

9) Remove the fastener (1) and center under cowling (2) from the left cowling assembly (3).

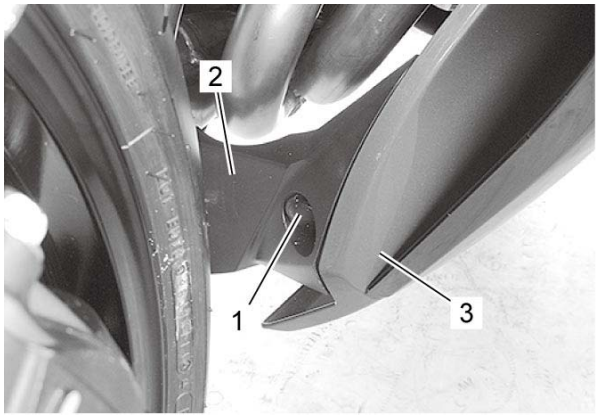

10) Remove the bolts (1) and right side cowling assembly (2).

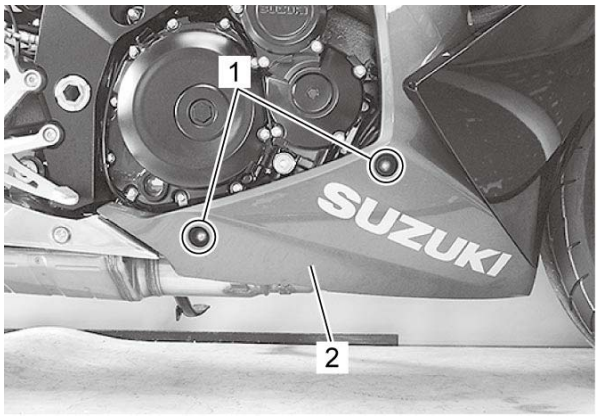

11) Remove the center under cowling (1).

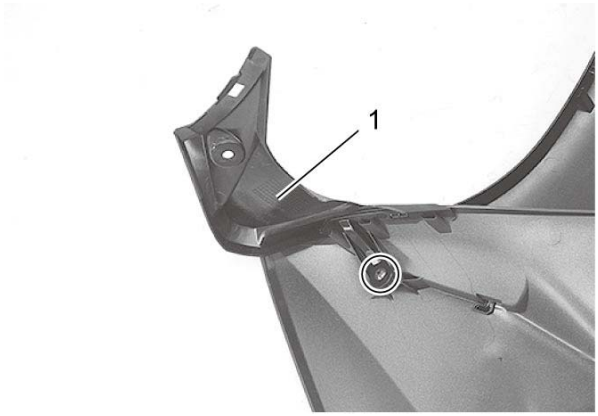

12) Remove the inner under cowling and under cowling. Refer to ***Side Cowling Construction (GSX-S1000F/FA)***.

Installation

Install the right side cowling assembly in the reverse order of removal. Pay attention to the following points:

- Install the right side cover (1) to the body cowling (2).

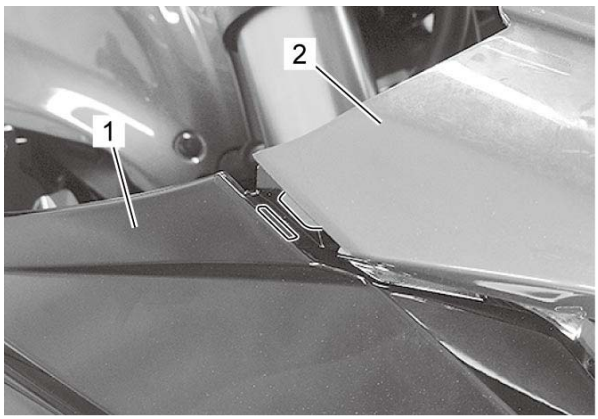

- Route the wiring harness. ☞
- Tighten the screw (1) to the specified torque.

Tightening torque

Headlight screw (a): 2 N·m (0.20 kgf-m, 1.50 lbf-ft)

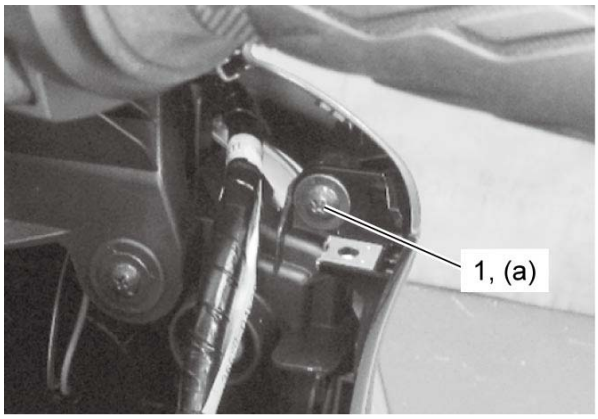

- Align the part [a] of the right meter panel (1) with the center position of part [b] of the body cowling (2). Taking this position as a reference, install the front side of the right meter panel (1), according to the shape of the body cowling (2).

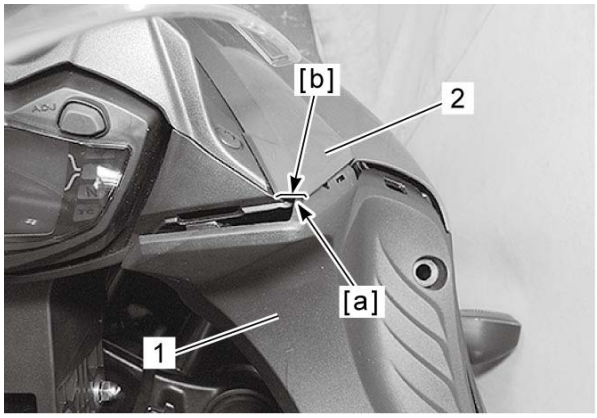

- Install the fastener (1) and screw (2).

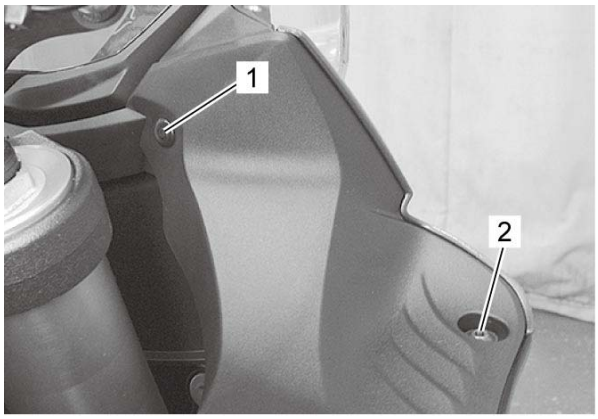

- Place a rag and install the part “a” of right meter panel (1) under the right side cover (2).

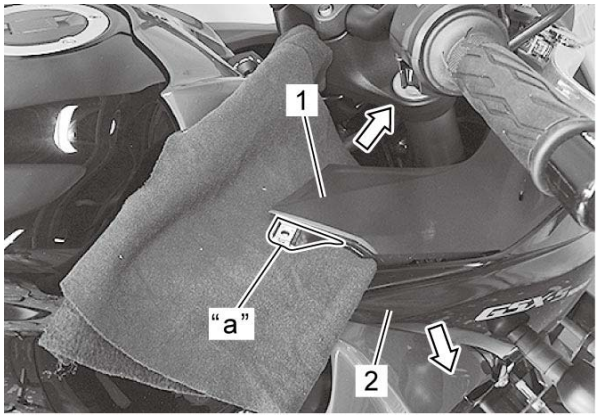

- Align the ends of right side cover (1) and right meter panel (2).
- Tighten the screw (3).

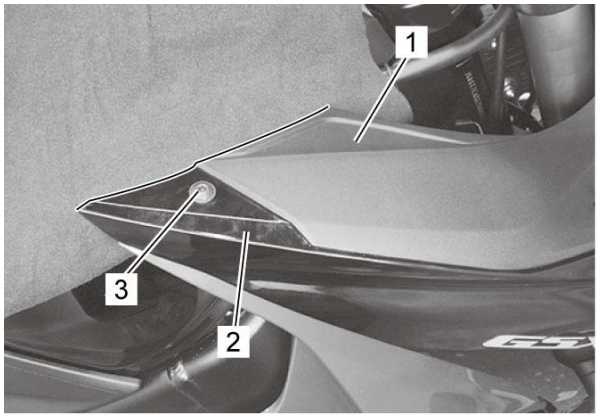

Left Side Cowling Assembly

Removal

1) Remove the left meter panel (1). Refer to ***Right Side Cowling Assembly***.

NOTE:
The same procedures are applicable to both the right and left meter panels.

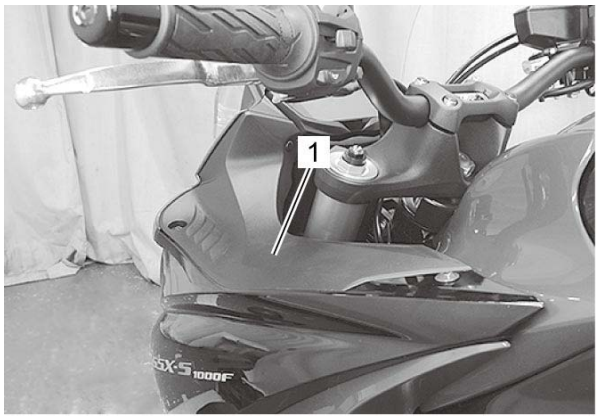

2) Release the clamp (1) and disconnect the left turn signal light coupler (2).

3) Remove the fastener (3).

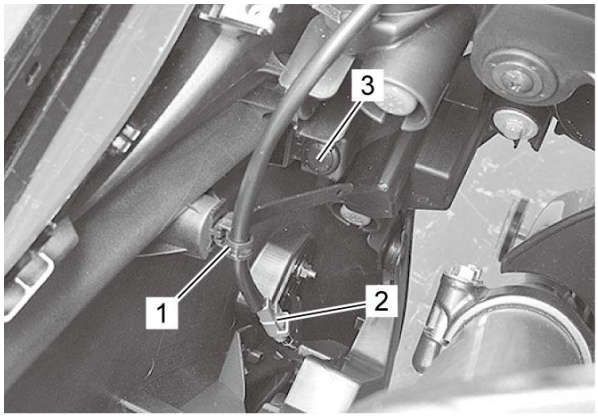

4) Remove the screws (1).

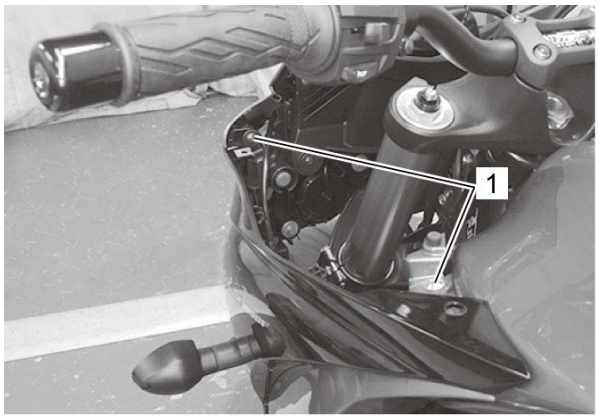

5) Remove the fasteners (1).
6) Remove the center under cowling (2) from the left side cowling assembly (3).

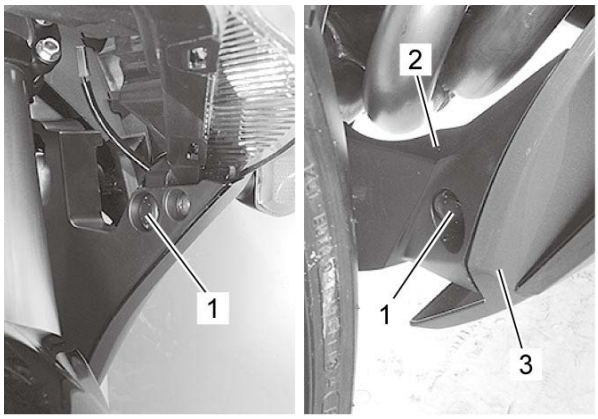

7) Remove the bolts (1) and left side cowling assembly (2).

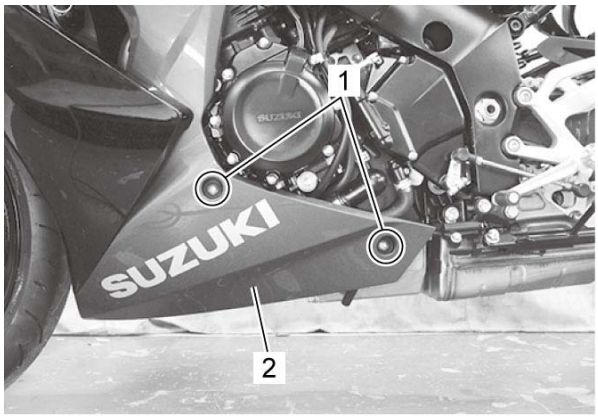

8) Remove the inner under cowling and under cowling. Refer to ***Side Cowling Construction (GSX-***

S1000F/FA).

Installation

Install the left side cowling assembly in the reverse order of removal. Pay attention to the following points:

- Install the left side cover (1) to the body cowling (2).

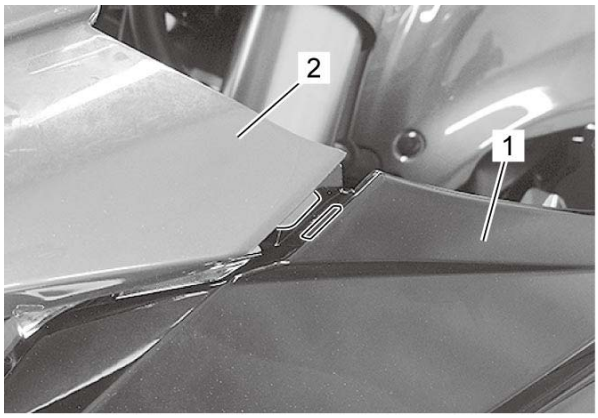

- Tighten the screw (1) to the specified torque.

Tightening torque

Headlight screw (a): 2 N·m (0.20 kgf-m, 1.50 lbf-ft)

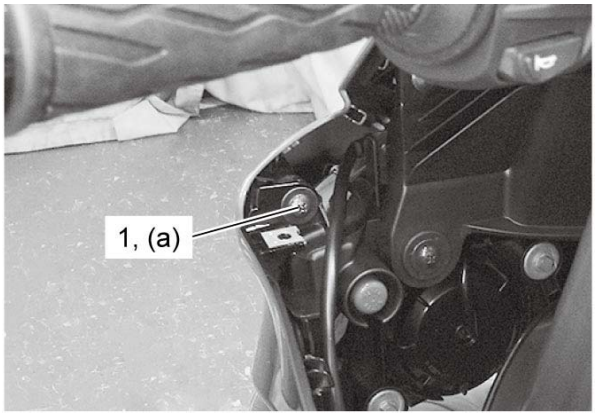

- Install the left meter panel (1). Refer to ***Right Side Cowling Assembly***.

NOTE:
The same procedures are applicable to both the right and left meter panels.

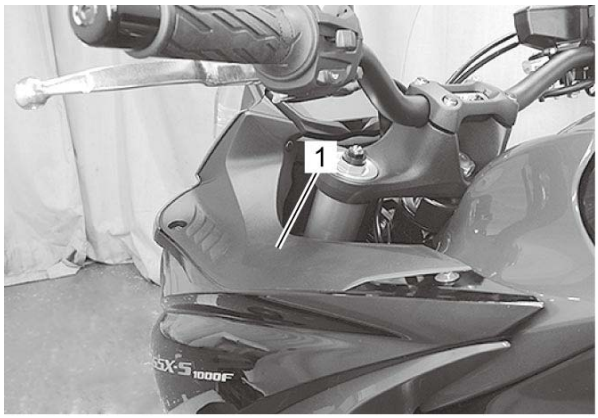
1

Side Cowling Construction (GSX-S1000F/FA)

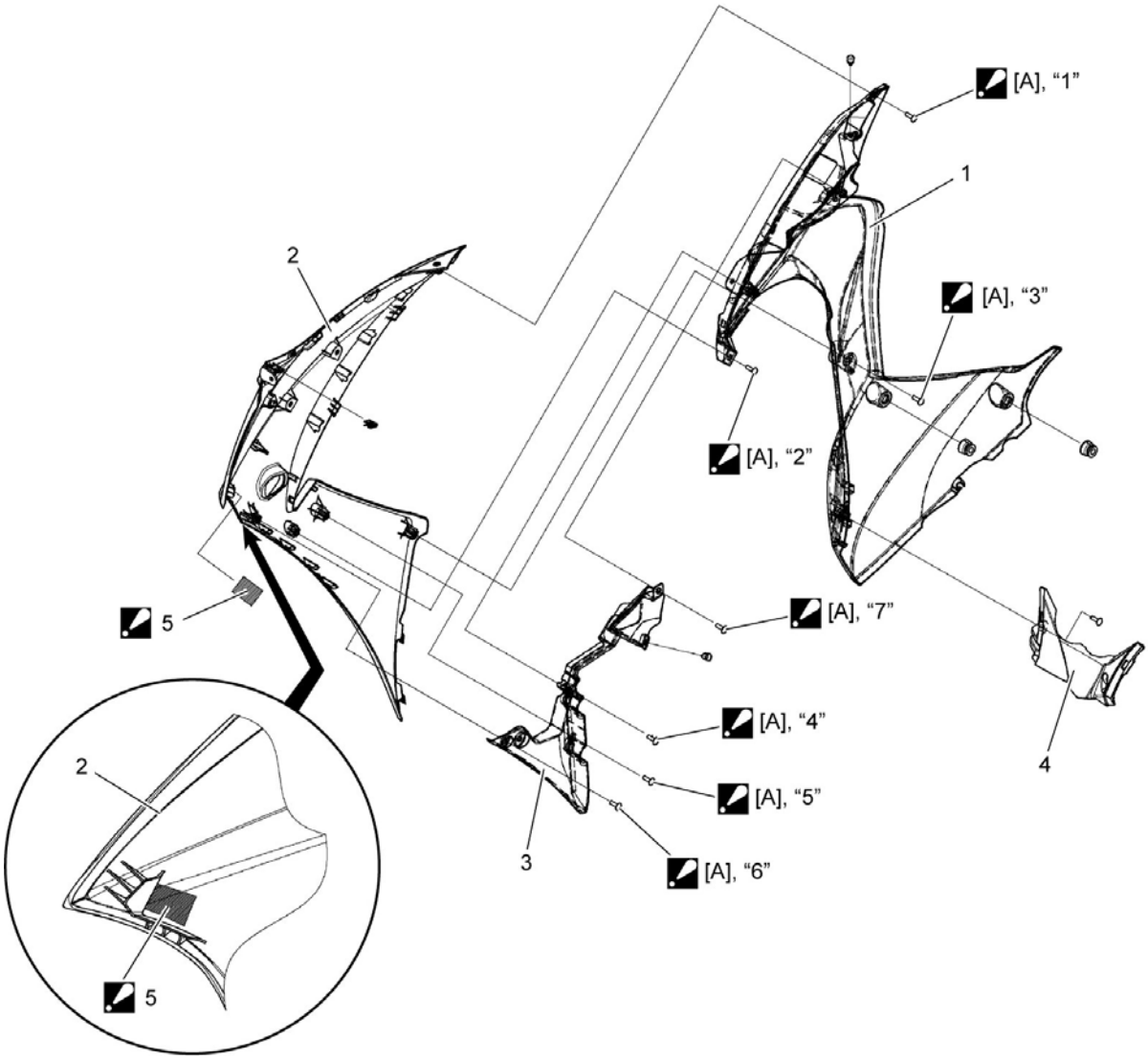

[A]:	Assemble the cowling and cover in order of "1" → "2" → "3" → "4" → "5" → "6" → "7".	3.	Inner under cowling
1.	Under cowling	4.	Center under cowling
2.	Side cover	5.	Velcro fastening : Sticking the velcro fastening with the emboss line.

Under Cowling Construction (GSX-S1000/A)

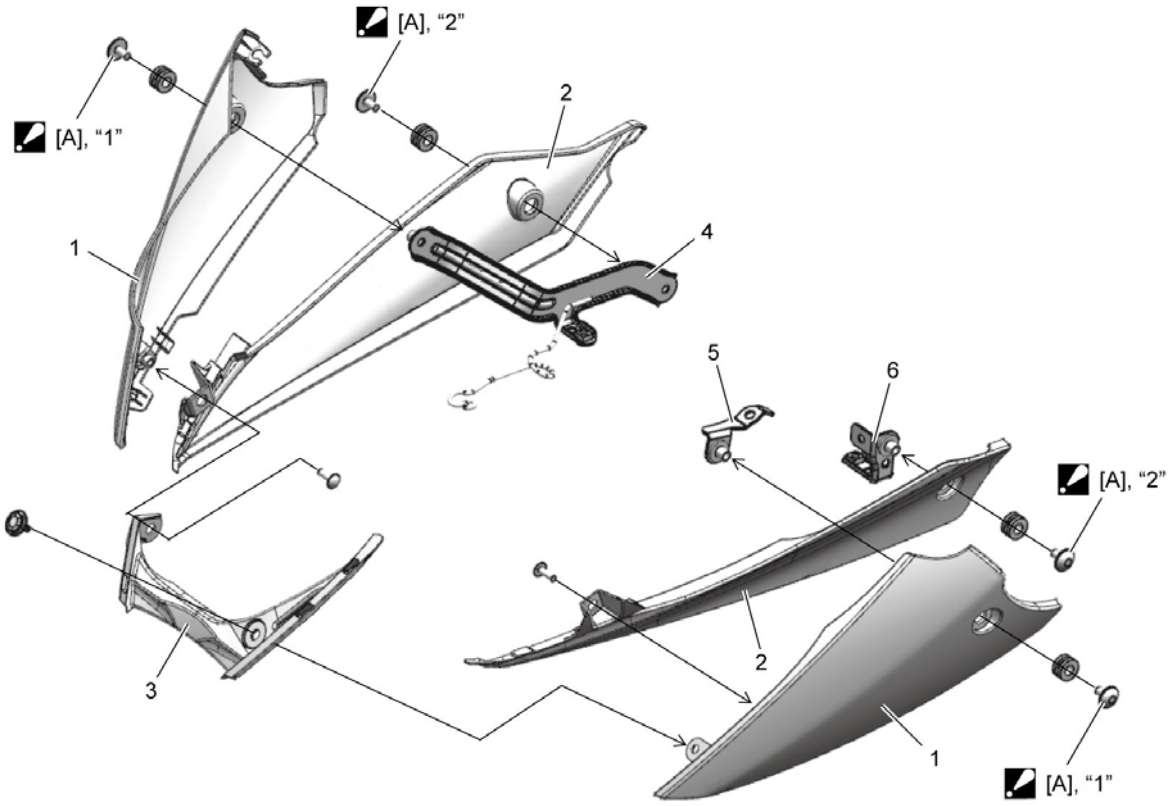

[A]:	Tighten the bolts in order of "1" → "2".	4.	Right under cowling bracket
1.	Under cowling	5.	Left under cowling front bracket
2.	Rear under cowling	6.	Left under cowling rear bracket
3.	Center under cowling		

Under Cowling Removal and Installation (GSX-S1000/A)

Reference: Under Cowling Construction (GSX-S1000/A)

Removal

1) Remove the fastener (1).



2) Remove the left under cowling assembly (1).

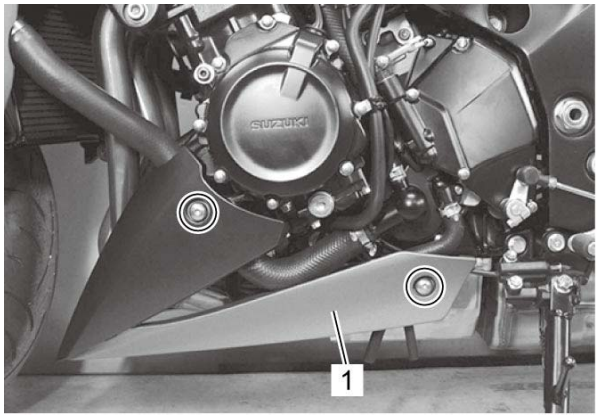

3) Remove the reservoir tank inlet hose (1).

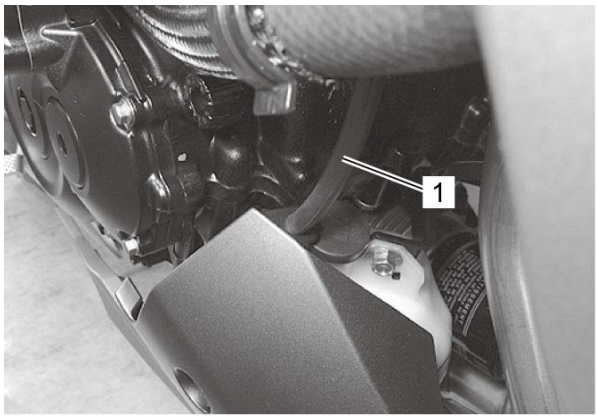

4) Remove the right under cowling (1).

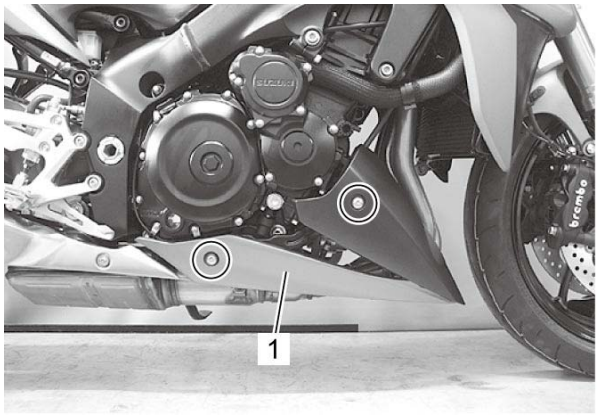

5) Remove the center under cowling (1).



6) Remove the rear under cowling (1).

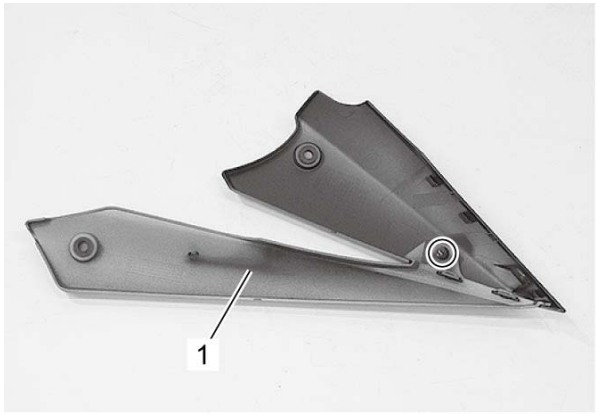

Installation

Install the under cowling in the reverse order of removal. Pay attention to the following points:

- Install the reservoir tank inlet hose (1).

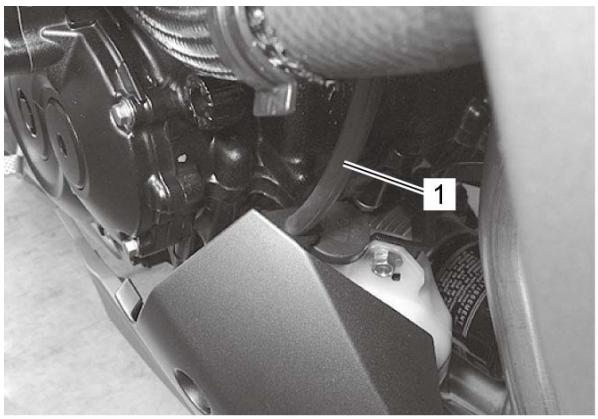

- Tighten the under cowling bolts in order of “1” → “2”.

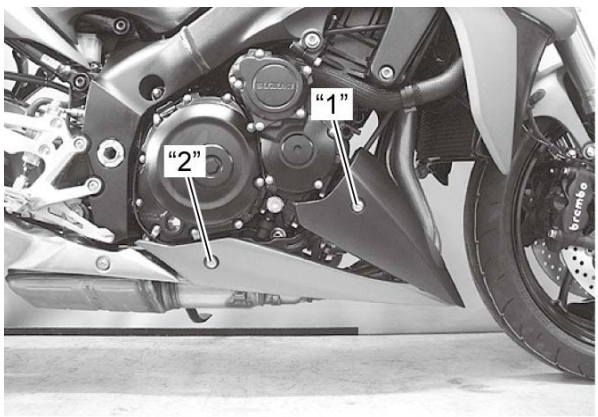

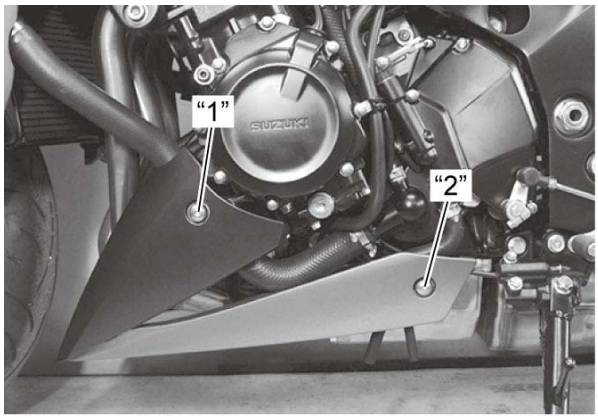
"1"
SUZUKI
"2"

Windscreen / Body Cowling / Side Cowling Construction (GSX-S1000F/FA)

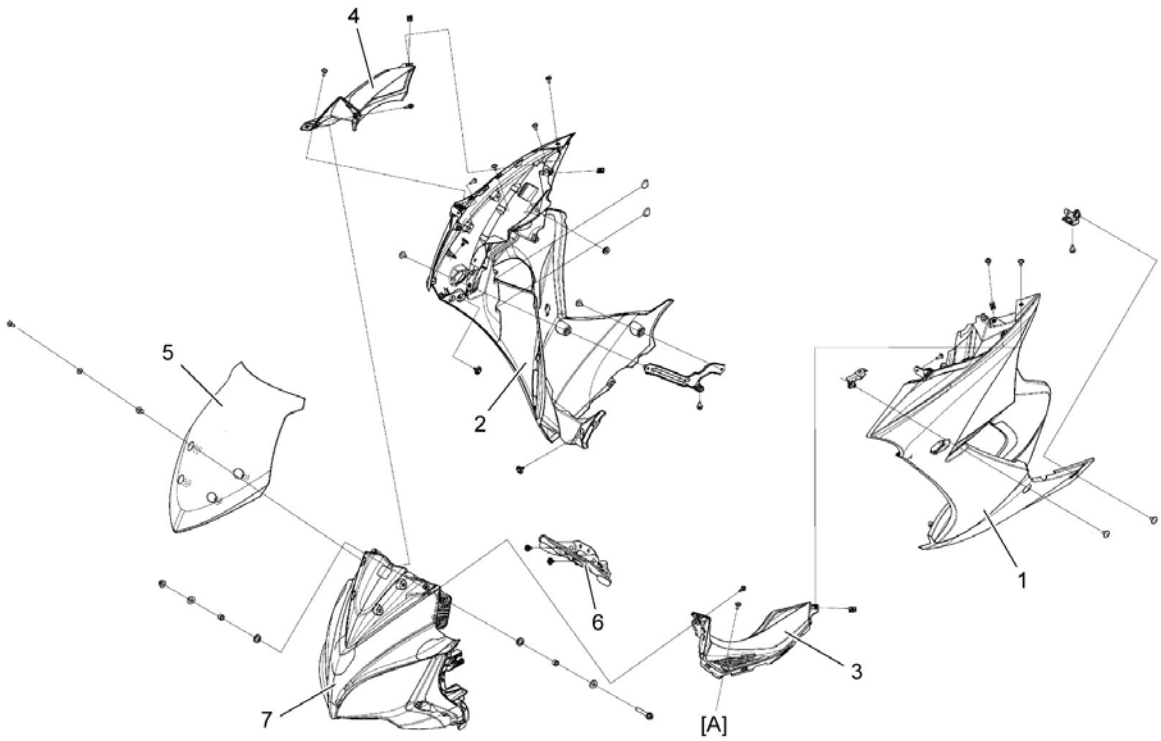

[A]:	To side cowling assembly	4.	Right meter panel
1.	Left side cowling assembly	5.	Windscreen
2.	Right side cowling assembly	6.	Lower bracket cover
3.	Left meter panel	7.	Body cowling assembly

Windscreen Removal and Installation (GSX-S1000F/FA)

Reference: Windscreen / Body Cowling / Side Cowling Construction (GSX-S1000F/FA)

Removal

Remove the windscreen (1).

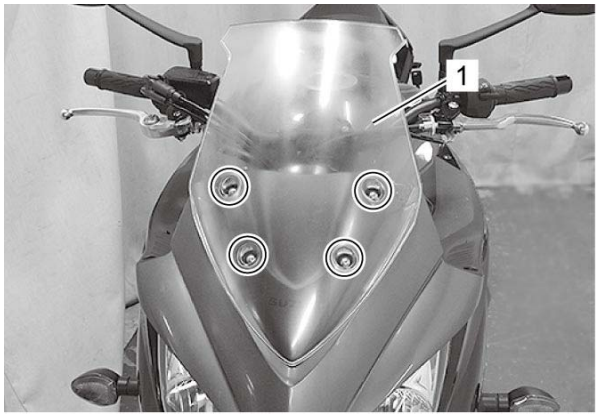

Installation

Install the windscreen in the reverse order of removal.

Tightening Torque Specifications

Fastening part	Tightening torque			Note
	N·m	kgf-m	lbf-ft	
Frame body cover bracket bolt	10	1.0	7.5	☞
Frame body cover bolt	5.5	0.56	4.05	☞
Headlight screw	2	0.20	1.50	☞ ☞ ☞
Fuel tank cover upper screw	10	1.0	7.5	☞
Fuel tank cover upper bolt	10	1.0	7.5	☞
Rear combination light bolt	5.5	0.56	4.05	☞

Reference:
For the tightening torques of fasteners not specified in this page, refer to:
Seat Lock Cable Routing Diagram
Frame Body Cover Construction (GSX-S1000/A)
Front Fender Construction
Fuel Tank Cover / Frame Front Cover Construction
Front Number Plate Construction (If Equipped)
Fasteners Information

Combination Meter Symptom Diagnosis

1) Check combination meter power and ground circuit.

2) Check DTC. ☞

- If some DTC appears during inspection in Step 2), go to applicable DTC diag. flow.
- If any of troubles described in table below has occurred independently even though DTC display is normal during inspection is Step 2), inspect subject place according to instructions in table below.

Condition	Possible Cause	Action
Speedometer does not operate	Wheel speed sensor	*Check wheel speed sensor.* ☞
	Speedometer	*Check speedometer.* ☞
	ECM	*Check ECM.* ☞ ☞ ☞ ☞
	Speedometer circuit	*Repair circuit.* ☞ ☞ ☞ ☞
	Wheel speed sensor circuit	*Repair circuit.* ☞ ☞ ☞ ☞
Fuel level indicator does not operate	Fuel level gauge	*Check fuel level sensor.* ☞
	Fuel level indicator	*Check fuel level indicator.* ☞
	Fuel level gauge circuit	*Repair circuit.* ☞ ☞ ☞ ☞
Oil pressure indicator light does not operate	Oil pressure switch	*Check oil pressure switch.* ☞
	Oil pressure indicator	*Check oil pressure indicator.* ☞
	Oil pressure switch circuit	*Repair circuit.* ☞ ☞ ☞ ☞
Engine coolant temperature indicator does not operate	ECT sensor	*Check ECT sensor.* ☞
	ECT indicator	*Check ECT indicator.* ☞
	ECT sensor circuit	*Repair circuit.* ☞ ☞ ☞ ☞

Horn Symptom Diagnosis



Condition	Possible Cause	Action
Horn does not operate	Faulty horn switch	*Check horn switch.* ☞
	Faulty wiring or grounding	*Repair circuit.*
	Faulty horn	*Check horn.* ☞

Combination Meter System Description

This combination meter mainly consists of LCD (Liquid Crystal Display) and LED (Light Emitting Diode). The LCD indicates, Fuel level indicator (5), Engine coolant temperature indicator (6), Tachometer (7), Fuel consumption/Driving range (8), TC mode OFF / 1 / 2 / 3 indicator (9), Clock (10), Odo / Trip A / Trip B / FI (DTC) / Instrument panel light brightness indicator (11), Speed (12), Gear position (13) and Oil pressure indicator (14) respectively.

LED (Light Emitting Diode)

LED is used for the illumination light and each indicator light.
LED is maintenance free. LED is less power consuming and more resistant to vibration compared to the bulb.

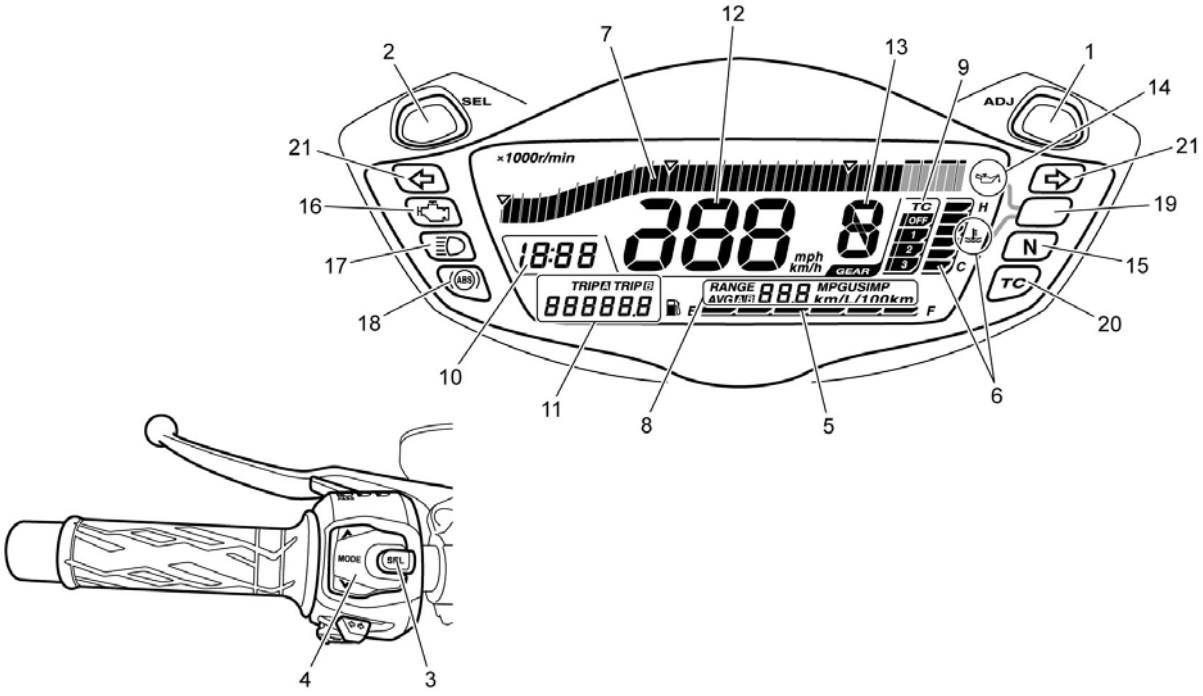

1.	Adjust switch	17.	LED (Hi beam indicator light)
2.	Select switch	18.	LED (ABS indicator light) (If equipped)
3.	Traction control system switch	19.	LED (Engine coolant temperature indicator light / Oil pressure indicator light)
4.	Mode switch (TC mode)	20.	LED (TC indicator light)
15.	LED (Neutral indicator light)	21.	LED (Turn signal indicator light)
16.	LED (MIL)		

Combination Meter Components

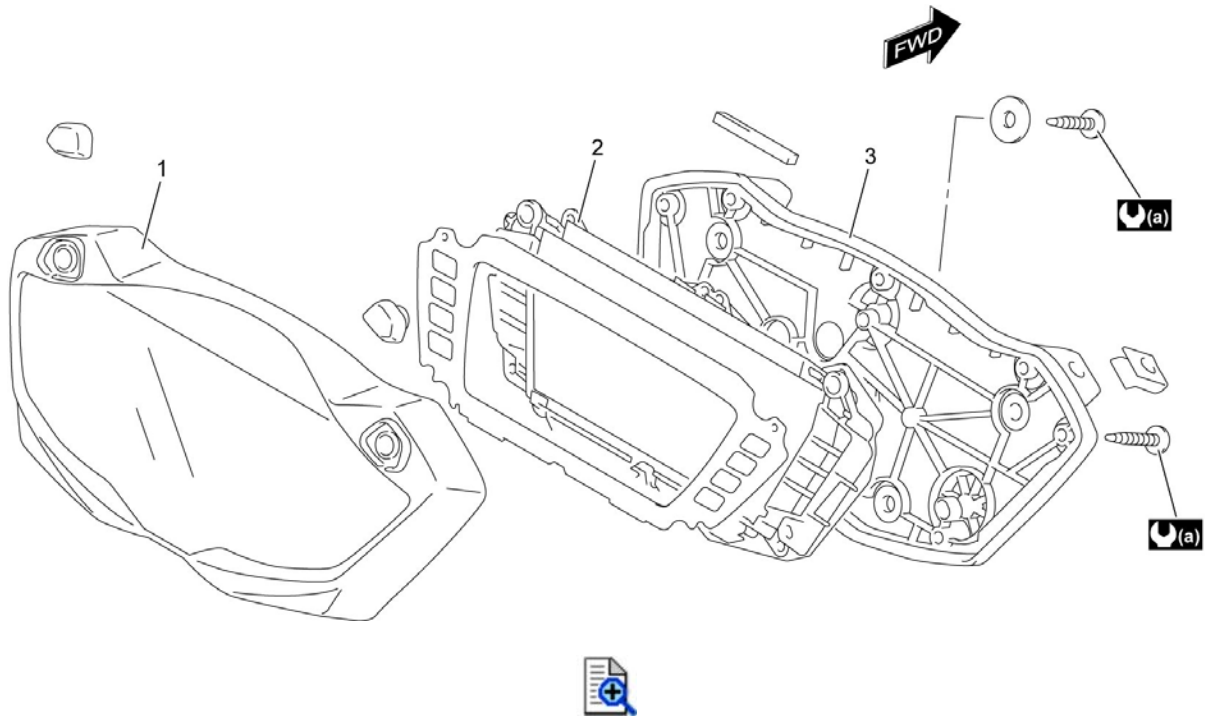

1.	Upper case	3.	Lower case
2.	Combination meter unit	(a):	2 N·m (0.20 kgf-m, 1.50 lbf-ft)

Combination Meter Construction

GSX-S1000/A

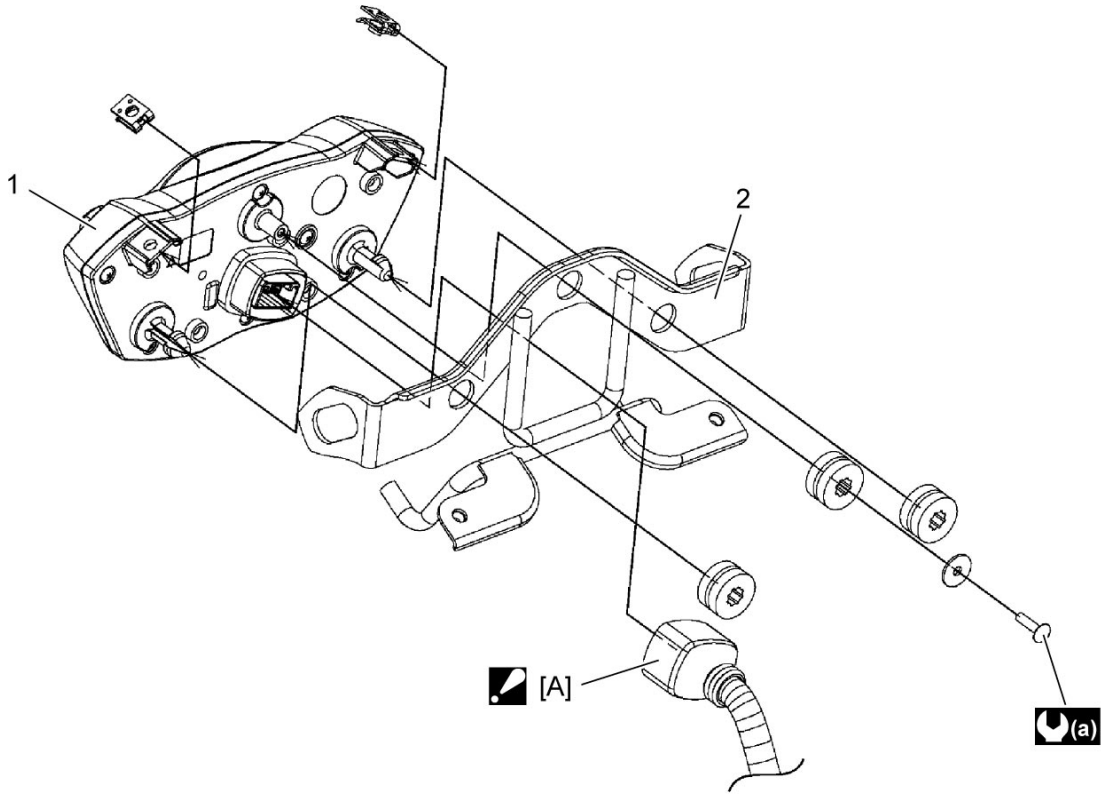

[A]:	Install the coupler boots to the combination meter securely.	2.	Meter brace
1.	Combination meter	(a):	2 N·m (0.20 kgf-m, 1.50 lbf-ft)

GSX-S1000F/FA

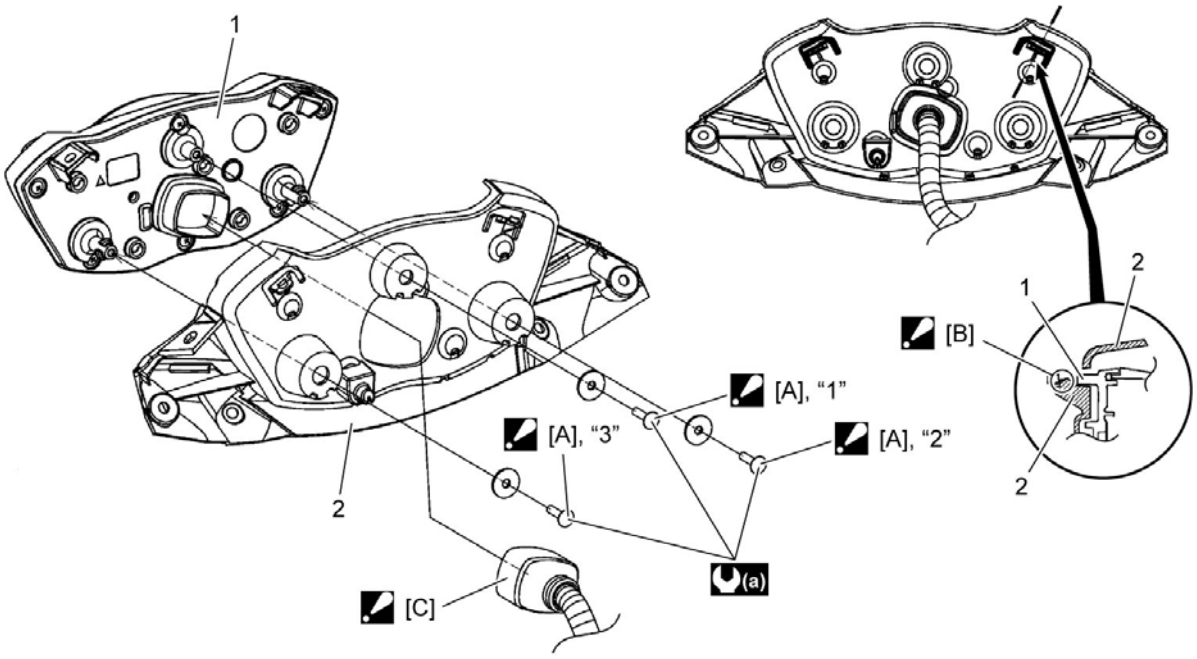

[A]:	Tighten the screws in order of "1" → "2" → "3".	1.	Combination meter
[B]:	Lock the protrusion of rear mater panel securely.	2.	Rear meter panel
[C]:	Install the coupler boots to the combination meter securely.	(a):	2 N·m (0.20 kgf-m, 1.50 lbf-ft)

Combination Meter Cushion Construction (GSX-S1000F/FA)

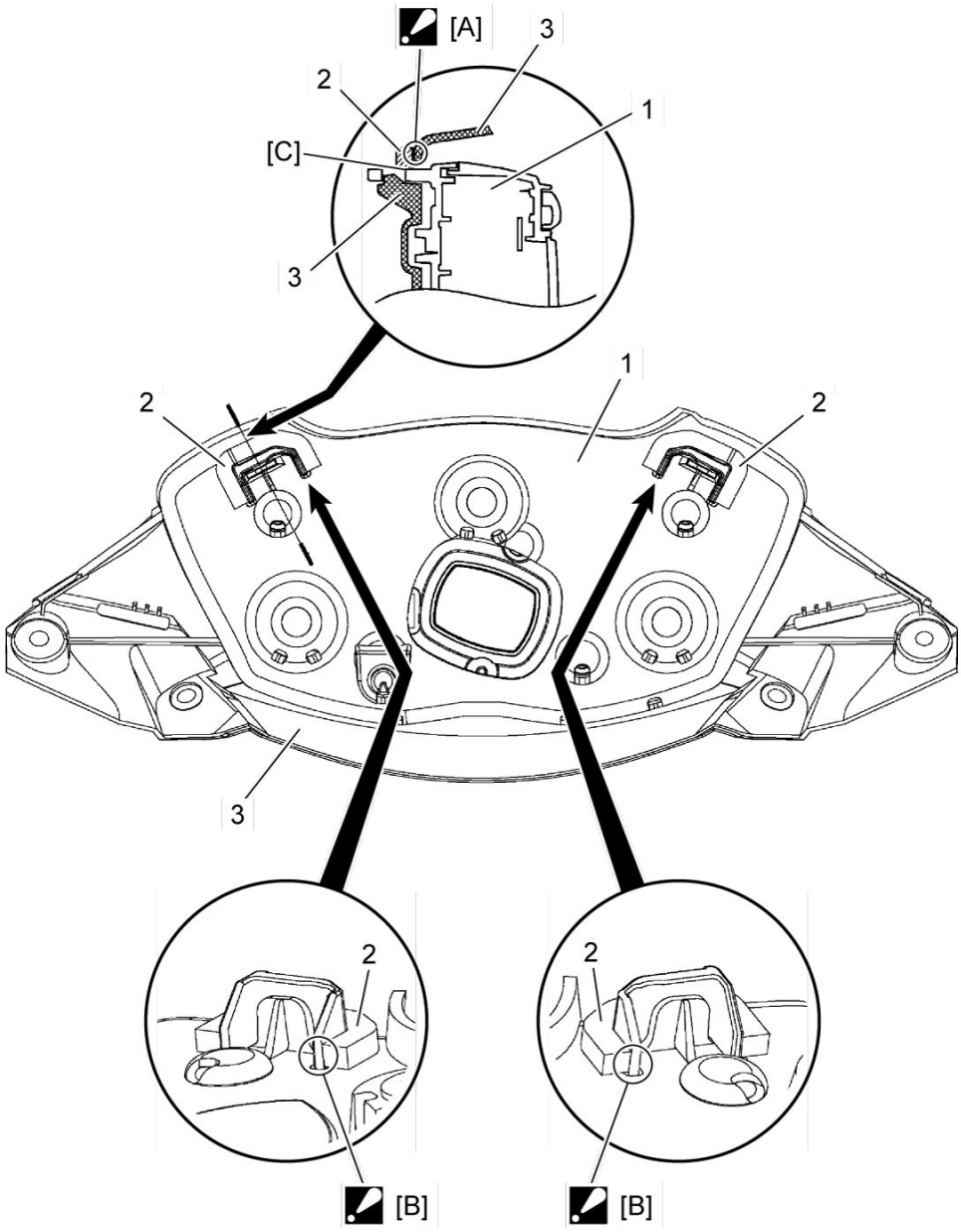

[A]:	Sticking the cushion aligning with the rear meter panel.	1.	Combination meter
[B]:	Sticking the cushion aligning with the edge.	2.	Cushion
[C]:	Sticking surface	3.	Rear meter panel

Combination Meter Disassembly and Reassembly

Refer to ***Combination Meter Removal and Installation***.

Disassembly

Disassemble the combination meter as shown in the combination meter components. ☞

Reassembly

Assemble the combination meter as shown in the combination meter components. ☞

Combination Meter On-Vehicle Inspection

LED Inspection

Check that the LEDs (MIL (1), ABS indicator light (2) (if equipped), Engine coolant temperature indicator light / Oil pressure indicator light (3) and TC indicator light (4) and Neutral indicator (5)) immediately light up when the ignition switch is turned to ON.
Check that other LED's (High-beam indicator light (6) and Turn signal indicator lights (7)) light up/go off by operating the dimmer and turn signal switches.
If abnormal condition is found, replace the combination meter unit with a new one after checking its wire harness/coupler. ☞

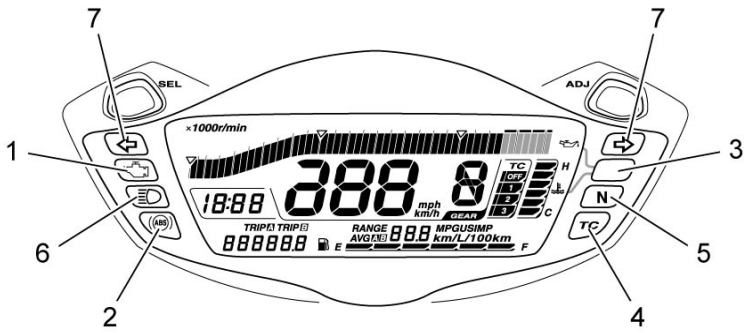

Combination Meter Removal and Installation

Reference: Combination Meter Construction

GSX-S1000 / A

Removal

1) Remove the meter cover (1).



2) Remove the headlight assembly. ☞

3) Disconnect the coupler (1) and remove the combination meter screw (2).

4) Remove the combination meter (3).

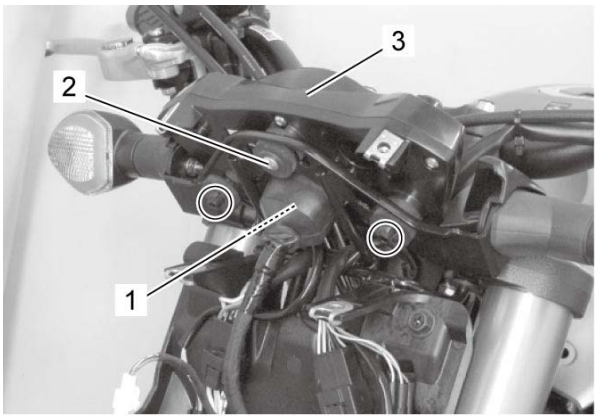

Installation

Install the combination meter in the reverse order of removal. Pay attention to the following points:

- Tighten the screw (1) to the specified torque.

Tightening torque

Speedometer screw (a): 2 N·m (0.20 kgf-m, 1.50 lbf-ft)

- Install the coupler boot (2).

NOTE:

Fix the boot (2) of the combination meter coupler firmly.

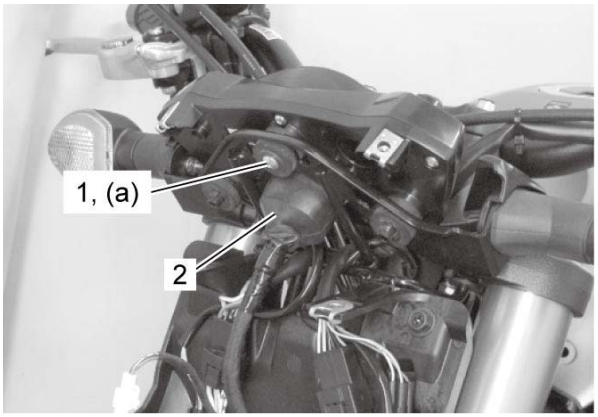

- Install the headlight assembly. ☞

GSX-S1000F/FA

Removal

1) Remove the left and right meter panels. ☞

2) Remove the fasteners (1).

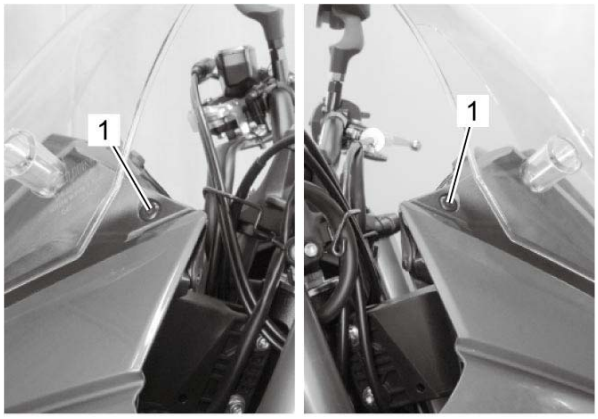

3) Remove the screws (1) and remove the meter rear panel (2).

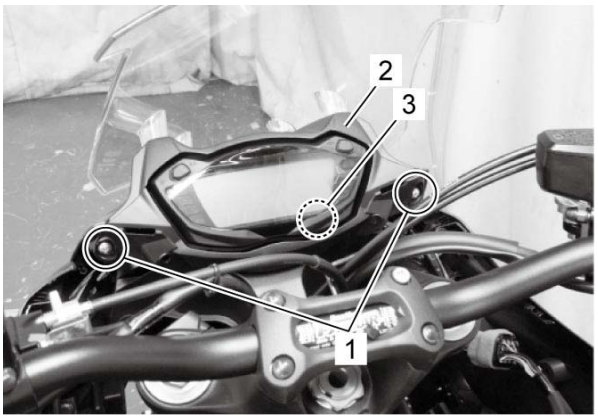

3.	Bushing

4) Disconnect the combination meter coupler (1).

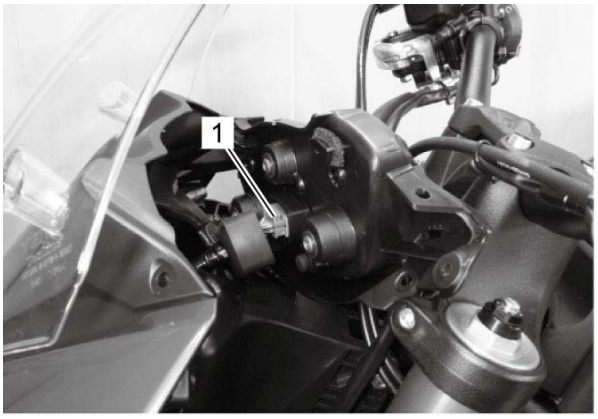

5) Remove the combination meter (1).



Installation

Install the combination meter in the reverse order of removal. Pay attention to the following points:

- Tighten the screws (1) to the specified torque in order of “1” → “2” → “3”.

Tightening torque

Speedometer screw (a): 2 N·m (0.20 kgf-m, 1.50 lbf-ft)

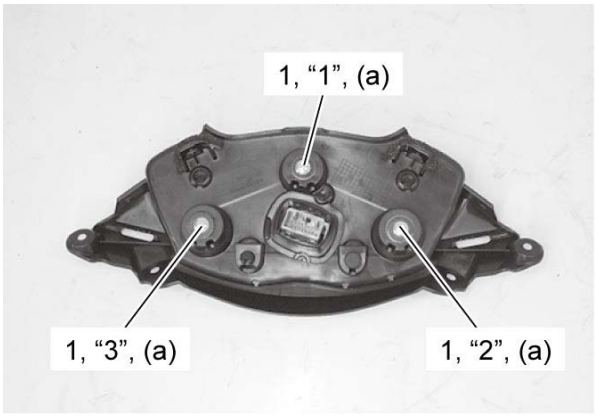

- Install the coupler boot (1).

NOTE:
Fix the boot (1) of the combination meter coupler firmly.

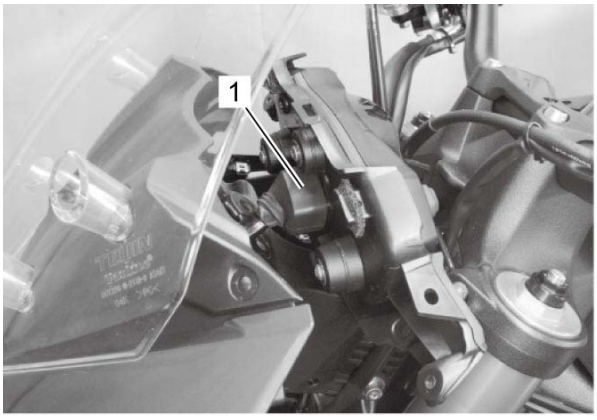

ECT Indicator Light Inspection

1) Lift and support the fuel tank. ☞

2) Disconnect the ECT sensor coupler (1).

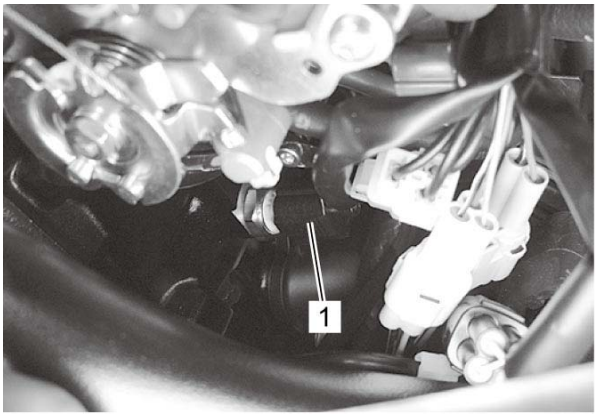

3) Connect a variable resistor (1) between the terminals.

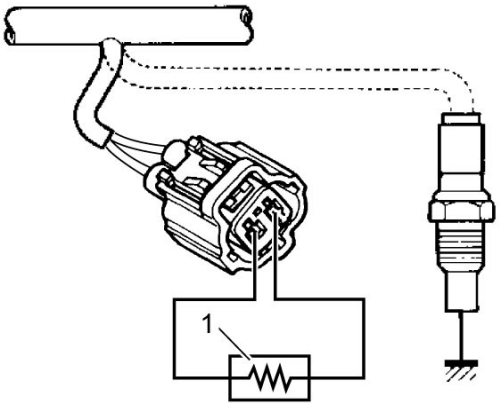

4) Turn the ignition switch ON.

5) Check the LCD and LED operations when the resistance is adjusted to the specified values.
If either one or both indications are abnormal, replace the combination meter assembly with a new one. ☞

Engine coolant temperature indicator		Temperature and resistance
LED	LCD	
ON	Flicker	120 °C (248 °F) Approx. 110 Ω
OFF	ON	[A] [B] 116 °C (241 °F) Approx. 122 Ω; 118 °C (244 °F) Approx. 116 Ω; 113 °C (235 °F) Approx. 131 Ω; 114 °C (237 °F) Approx. 128 Ω; 110 °C (230 °F) Approx. 141 Ω; 111 °C (231 °F) Approx. 138 Ω; 70 °C (158 °F) Approx. 427 Ω; 108 °C (226 °F) Approx. 149 Ω; 50 °C (122 °F) Approx. 811 Ω; 68 °C (154 °F) Approx. 454 Ω; 40 °C (104 °F) Approx. 1149 Ω; 48 °C (118 °F) Approx. 868 Ω
OFF	ON	
OFF	ON	
OFF	ON	
OFF	ON	
OFF	ON	
OFF	ON	38 °C (101 °F) Approx. 1235 Ω

[A]:	When decreasing the temperature	[B]:	When increasing the temperature

6) Connect the ECT sensor coupler.

Fuel Level Indicator Inspection

1) Lift and support the fuel tank. ☞

2) Disconnect the fuel pump coupler (1).

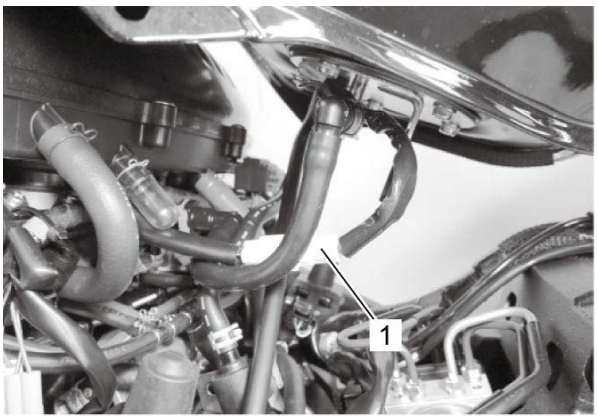

3) Connect a variable resistor (1) between the Y/B and B/W lead wires of the wire harness side coupler.

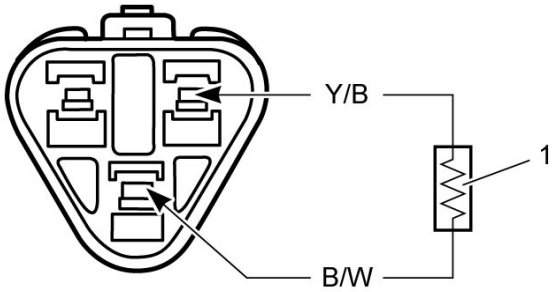

4) Turn the ignition switch ON.

5) Check the display of fuel level indicator (LCD) as shown in the figure.
If any abnormality is found, replace the combination meter with a new one. ☞

NOTE:
It takes approx. 40 seconds that the fuel level indicator indicates the detected fuel level.

Resistance	Fuel level indicator
200 ± 11.5 Ω	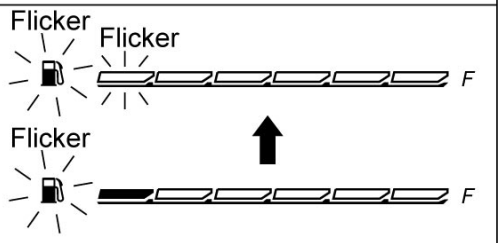
155 ± 8.5 Ω	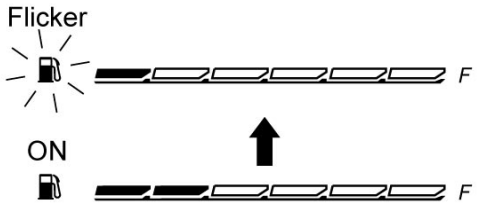
120 ± 7 Ω	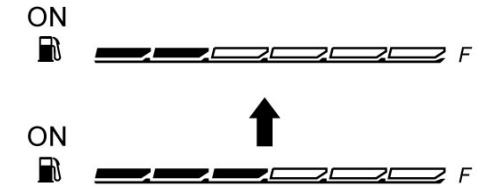
84 ± 5 Ω	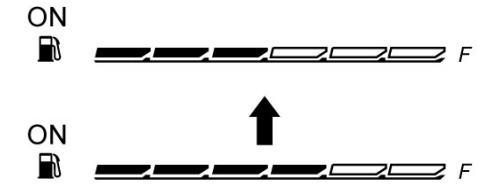
50 ± 4 Ω	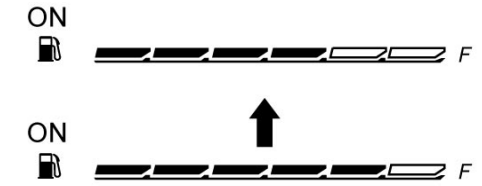
15 ± 2.5 Ω	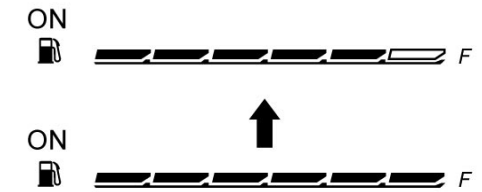

6) Connect the fuel pump coupler and reinstall the fuel tank. ☞

Horn Inspection

Horn Switch Inspection

1) Remove the following parts.
- Headlight assembly (GSX-S1000/A): ☞
- Air cleaner box (GSX-S1000F/FA): ☞

2) Disconnect the left handle switch coupler (1).

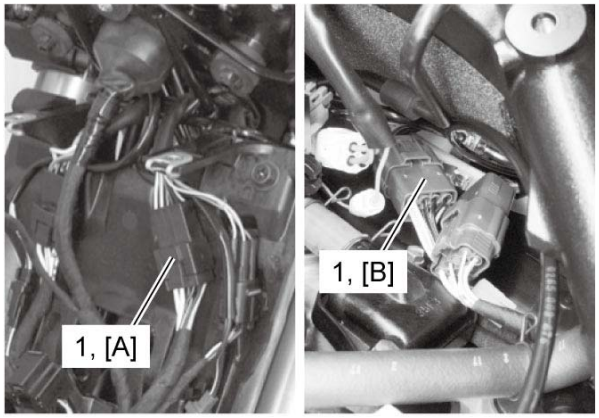

[A]:	GSX-S1000/A	[B]:	GSX-S1000F/FA

3) Inspect the horn switch for continuity with a tester.
If any abnormality is found, replace the left handle switch with a new one. ☞

Color / Position	B/Bl	B/W
•		
PUSH	○———	———○

Horn Inspection

1) Remove the horn. ☞

2) Connect a 12 V battery to the horn terminals. If the sound is not heard from the horn, replace the horn with a new one.

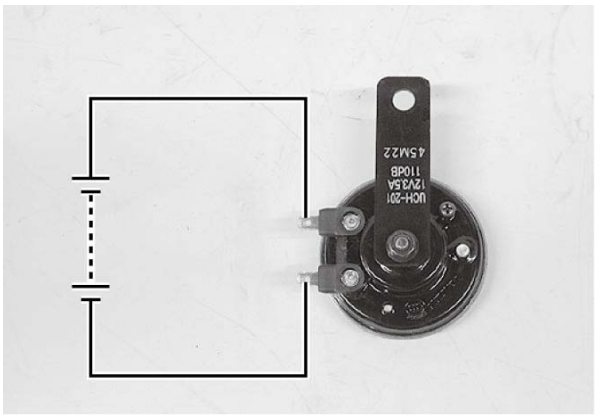
UCH-201
12V 2A
110dB
4SM22

Horn Removal and Installation

Removal

1) Remove the following parts.
- Left frame body cover (GSX-S1000/A): ☞
- Left side cowling assembly (GSX-S1000F/FA): ☞

2) Disconnect the horn terminals (1).

3) Remove the horn plate (2) with horn (3).

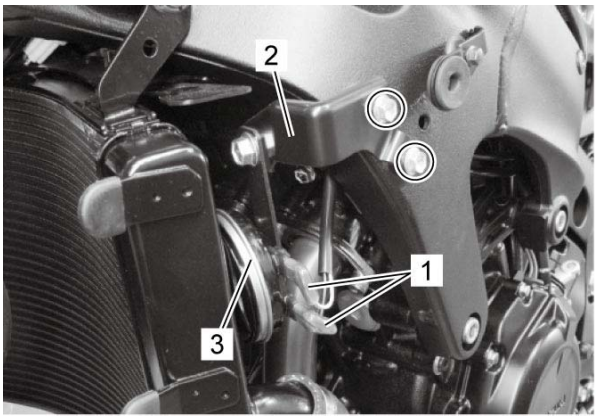

4) Remove the horn (1).



Installation

Install the horn in the reverse order of removal. Pay attention to the following points:
- Tighten the horn bolt (1) to the specified torque.

Tightening torque

Horn bolt (a): 22 N·m (2.2 kgf-m, 16.5 lbf-ft)

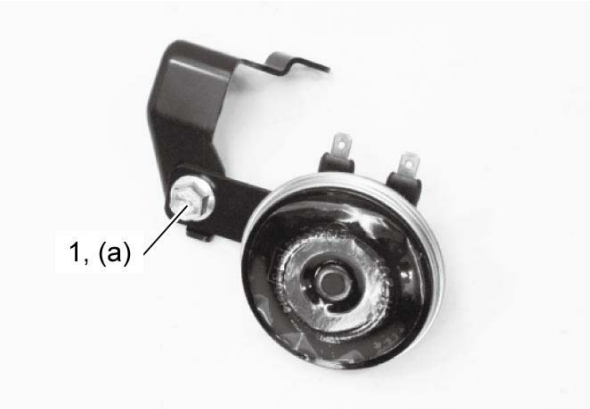

- Tighten the horn plate bolts (1) to the specified torque.

Tightening torque

Horn plate bolt (a): 14 N·m (1.4 kgf-m, 10.5 lbf-ft)

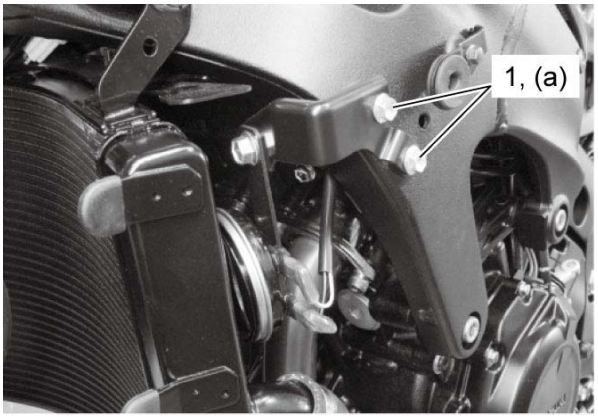

Oil Pressure Indicator Inspection

NOTE:
Before inspecting the oil pressure switch, check if the engine oil level is correct. Refer to *Engine Oil Inspection*.

1) Disconnect the oil pressure switch lead wire (1). Refer to ***Oil Pressure Switch Removal and Installation***.

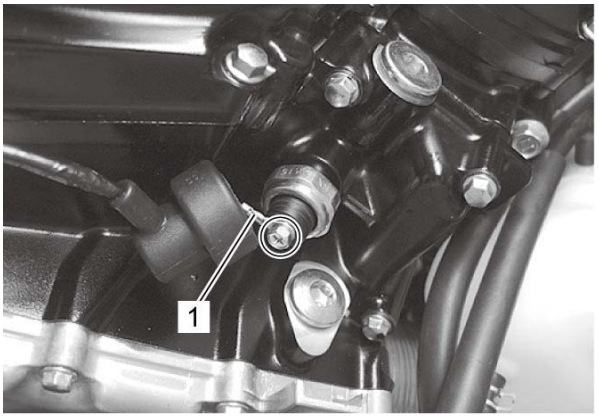

2) Turn the ignition switch ON.

3) Check if the oil pressure indicator (LED) (2) and LCD (3) will light up when grounding the lead wire (1).
If the oil pressure indicator does not light up, replace the combination meter assembly with a new one after checking the connection of couplers.

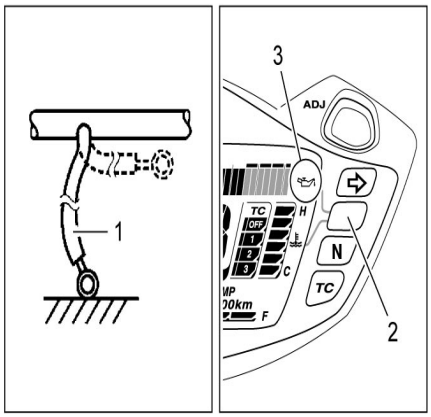

Speedometer On-Vehicle Inspection



If the speedometer, odometer or tripmeter does not function properly, inspect the wheel speed sensors and the coupler connections. If the wheel speed sensors and coupler connections are OK, replace the combination meter with a new one. ☞

Tightening Torque Specifications

Fastening part	Tightening torque			Note
	N·m	kgf-m	lbf-ft	
Speedometer screw	2	0.20	1.50	☞ ☞
Horn bolt	22	2.2	16.5	☞
Horn plate bolt	14	1.4	10.5	☞

Reference:
For the tightening torques of fasteners not specified in this page, refer to:
Combination Meter Construction
Combination Meter Components
Fasteners Information

Body Frame Construction

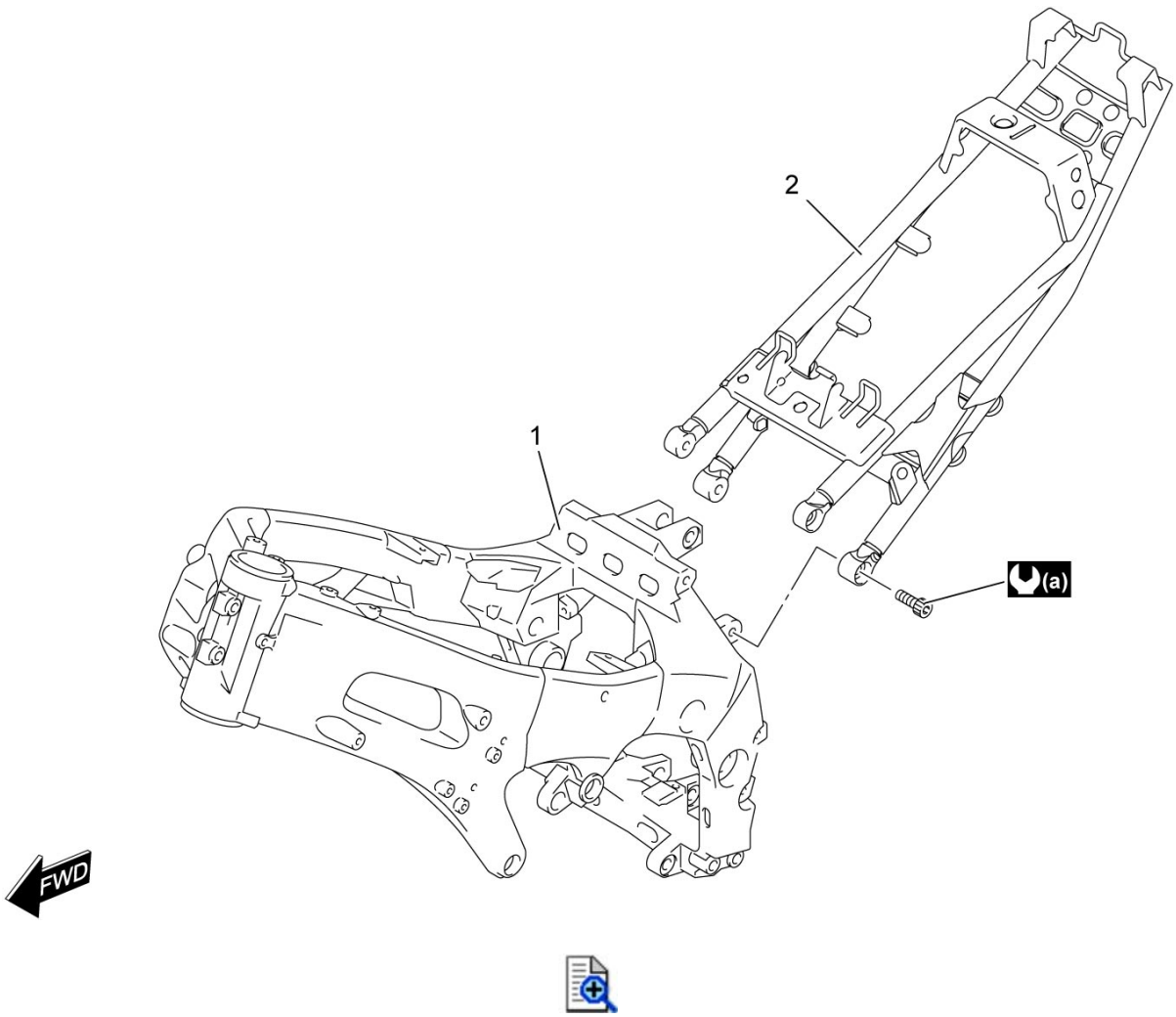

1.	Frame	2.	Seat rail	(a):	50 N·m (5.1 kgf-m, 37.0 lbf-ft)

Front Footrest Bracket Construction

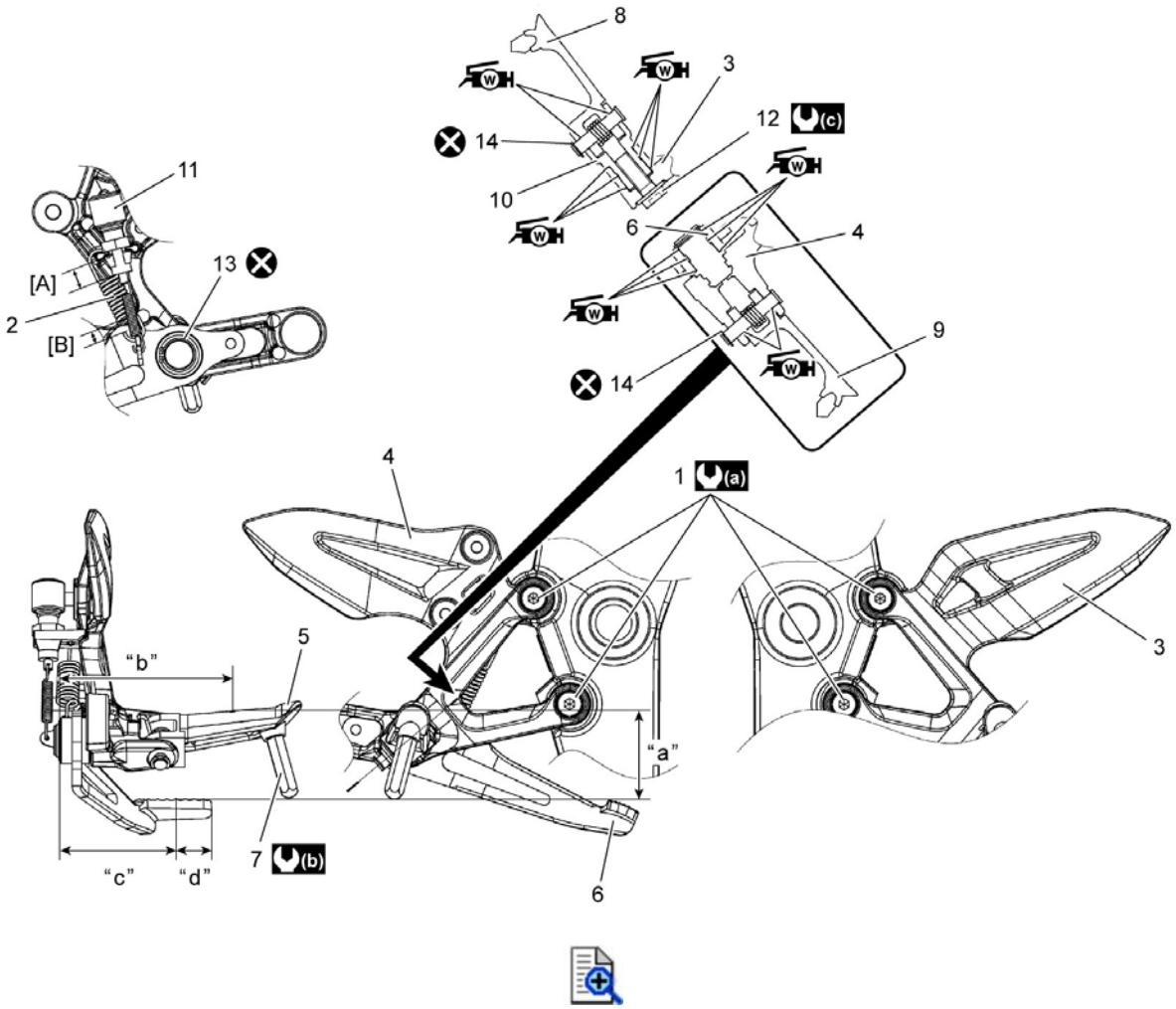

[A]:	Long	8.	Front footrest bar (Left)	"c":	71.1 mm (2.80 in)
[B]:	Short	9.	Front footrest bar (Right)	"d":	21.8 mm (0.858 in)
1.	Footrest bracket bolt	10.	Footrest holder	(a):	26 N·m (2.7 kgf-m, 19.5 lbf-ft)
2.	Front brake pedal spring	11.	Rear brake light switch	(b):	18 N·m (1.8 kgf-m, 13.5 lbf-ft)
3.	Front footrest bracket (Left)	12.	Footrest holder bolt	(c):	35 N·m (3.6 kgf-m, 26.0 lbf-ft)
4.	Front footrest bracket (Right)	13.	Snap ring	(W):	Apply grease to the sliding surface.
5.	Footrest	14.	E-ring	(X):	Do not reuse.
6.	Rear brake pedal	"a":	50 – 60 mm (2.0 – 2.4 in)		
7.	Bank sensor bolt	"b":	105.5 mm (4.154 in)		

Pillion Footrest Construction

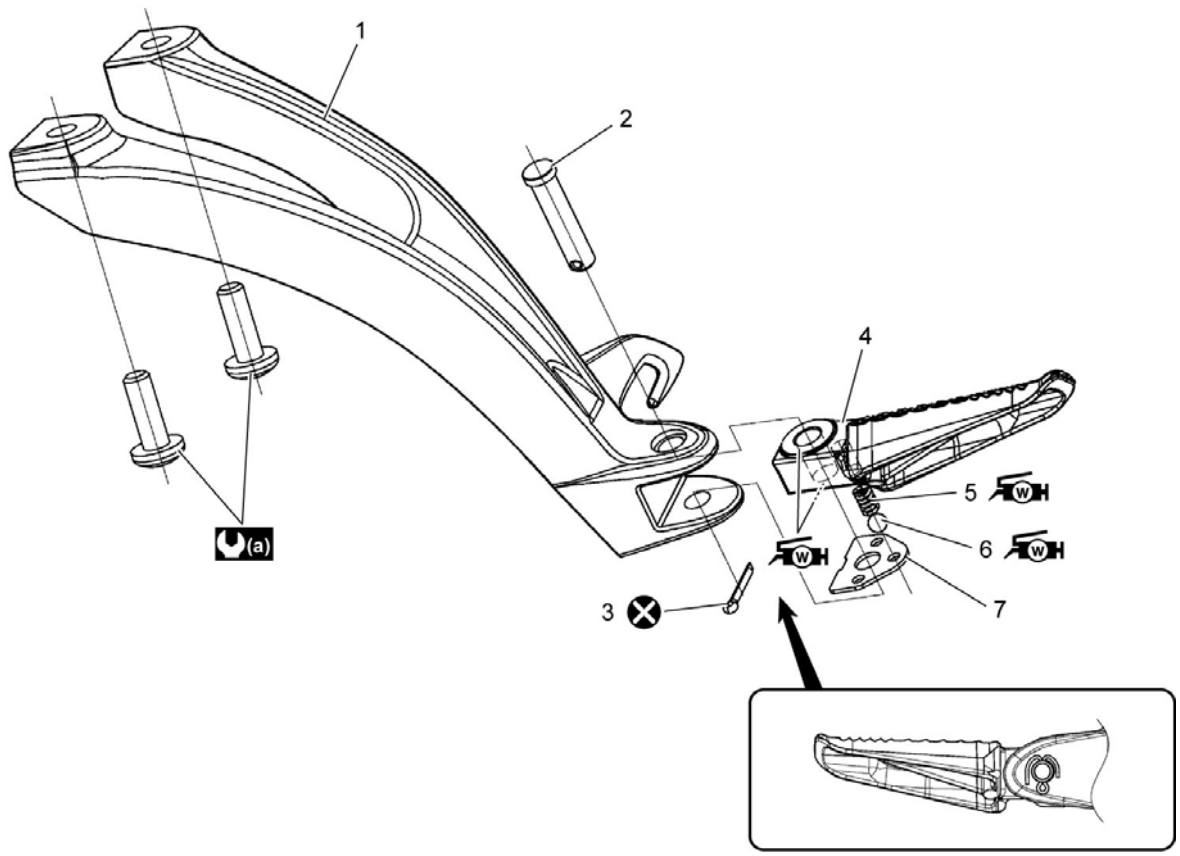

1.	Pillion footrest bracket	6.	Ball
2.	Pillion footrest pin	7.	Pillion footrest plate
3.	Cotter pin	(a):	23 N·m (2.3 kgf-m, 17.0 lbf-ft)
4.	Pillion footrest bar	W:	Apply grease.
5.	Spring	⊗:	Do not reuse.

Side-stand Construction

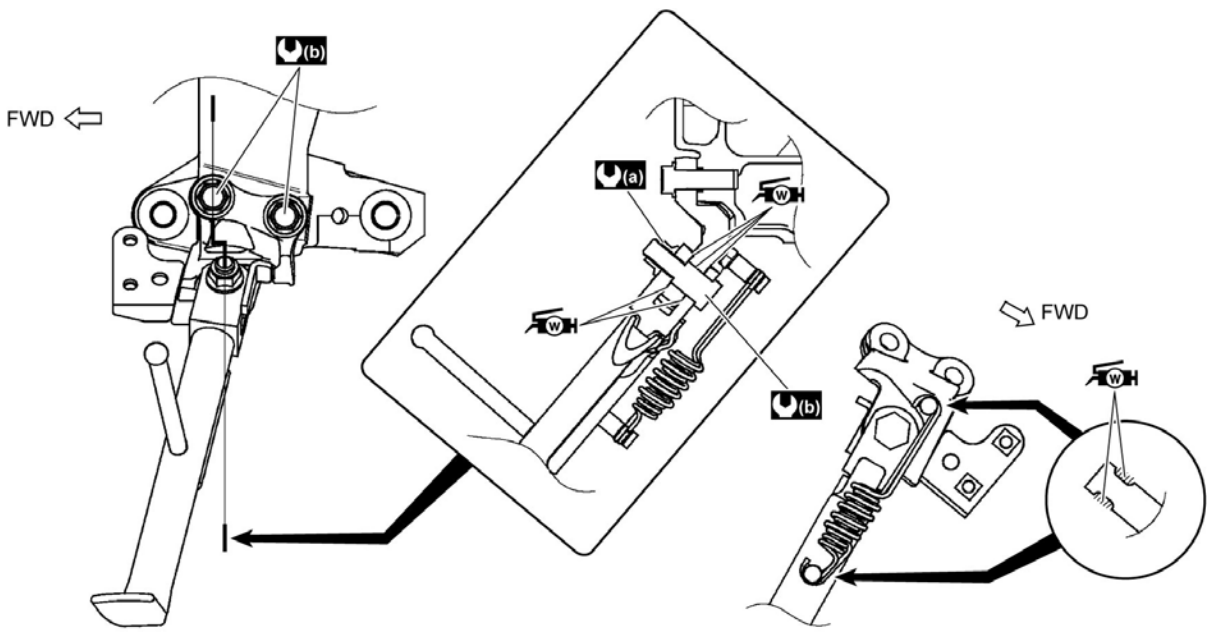

(a):	40 N·m (4.1 kgf-m, 29.5 lbf-ft)	:	Apply grease to the sliding surface.
(b):	50 N·m (5.1 kgf-m, 37.0 lbf-ft)		

Side-stand Removal and Installation

Refer to ***Side-stand Construction***.

Removal

1) Support the motorcycle with a jack or wooden block.

⚠CAUTION:
- **Do not support the motorcycle with the exhaust pipes.**
- **Make sure that the motorcycle is supported securely.**

2) Remove the side-stand.

Installation

Install the side-stand.

How to Read Terminal Nos.

The connector shape and terminal layout shown in this manual are those when viewed from “Z” in the illustration.

NOTE:

- **Molded terminal numbers that are different from the above can be found on some connectors in rare cases.**
- **These molded numbers are not applied in this manual.**

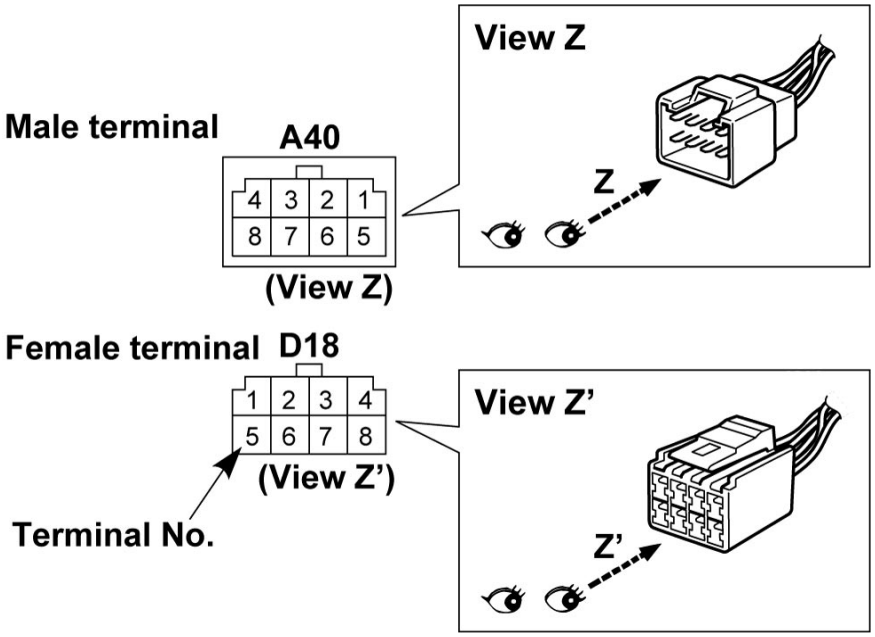

Glossary

English	
ABS CONTROL UNIT	
ABS MOTOR	
ABS VALVE	
AP SENSOR	
AMBIENT AIR TEMP SENSOR	
BATTERY	
BRAKE LIGHT SWITCH	
CARBURETOR SWITCH	
CDI UNIT	
CKP SENSOR	
CLUTCH LEVER POSITION SWITCH	
CLUTCH SWITCH	
COOLING FAN MOTOR	
DIMMER SWITCH	
ECM	
ECT SENSOR	
ENGINE STOP SWITCH	
ET SENSOR	
EVAP SYSTEM PURGE CONTROL SOLENOID VALVE	
EXCV ACTUATOR	
FAN	
FAN RELAY	
FI INDICATOR LIGHT	
FRONT BRAKE LIGHT SWITCH	
FRONT TURN SIGNAL LIGHT	
FRONT WHEEL SPEED SENSOR	
FUEL	
FUEL INJECTOR	
FUEL LEVEL GAUGE	
FUEL PUMP	
FUEL PUMP RELAY	
FUSE BOX	
GENERATOR	
GP SWITCH	
HANDLE SWITCH	
HAZARD SWITCH	
HEADLIGHT	
HIGH BEAM INDICATOR LIGHT	
HO2 SENSOR	
HORN	
HORN SWITCH	
IAP SENSOR	
IAP/TP SENSOR	

IAP/TP/IAT SENSOR	
IAT SENSOR	
IF EQUIPPED	
IGNITION	
IGNITION COIL	
IGNITION SWITCH	
ILLUMINATION LIGHT	
ISC VALVE	
IMMOBILIZER ANTENNA	
LICENSE PLATE LIGHT	
LIGHTING SWITCH	
LIGHT/HORN RELAY	
LOW BEAM RELAY	
MAIN FUSE	
MALFUNCTION INDICATOR LAMP	
MODE SELECT COUPLER	
MODE SWITCH	
O2 SENSOR	
OIL PRESSURE SWITCH	
OPTION	
PASSING LIGHT SWITCH	
PAIR CONTROL SOLENOID VALVE	
POSITION LIGHT	
POWER SOURCE	
REAR BRAKE LIGHT SWITCH	
REAR COMBINATION LIGHT	
REAR TURN SIGNAL LIGHT	
REAR WHEEL SPEED SENSOR	
REGULATOR/RECTIFIER	
SELECT SWITCH	
SIDE-STAND DIODE	
SIDE-STAND RELAY	
SIDE-STAND SWITCH	
SIGNAL	
SPEED SENSOR	
SPEEDOMETER	
SPEEDOMETER LIGHT	
STARTER SWITCH	
STARTER MOTOR	
STARTER RELAY	
STV ACTUATOR	
TO SENSOR	
TP SENSOR	
TRACTION CONTROL SYSTEM SWITCH	
TURN SIGNAL INDICATOR LIGHT	
TURN SIGNAL RELAY	
TURN SIGNAL SWITCH	

Electrical Components Location

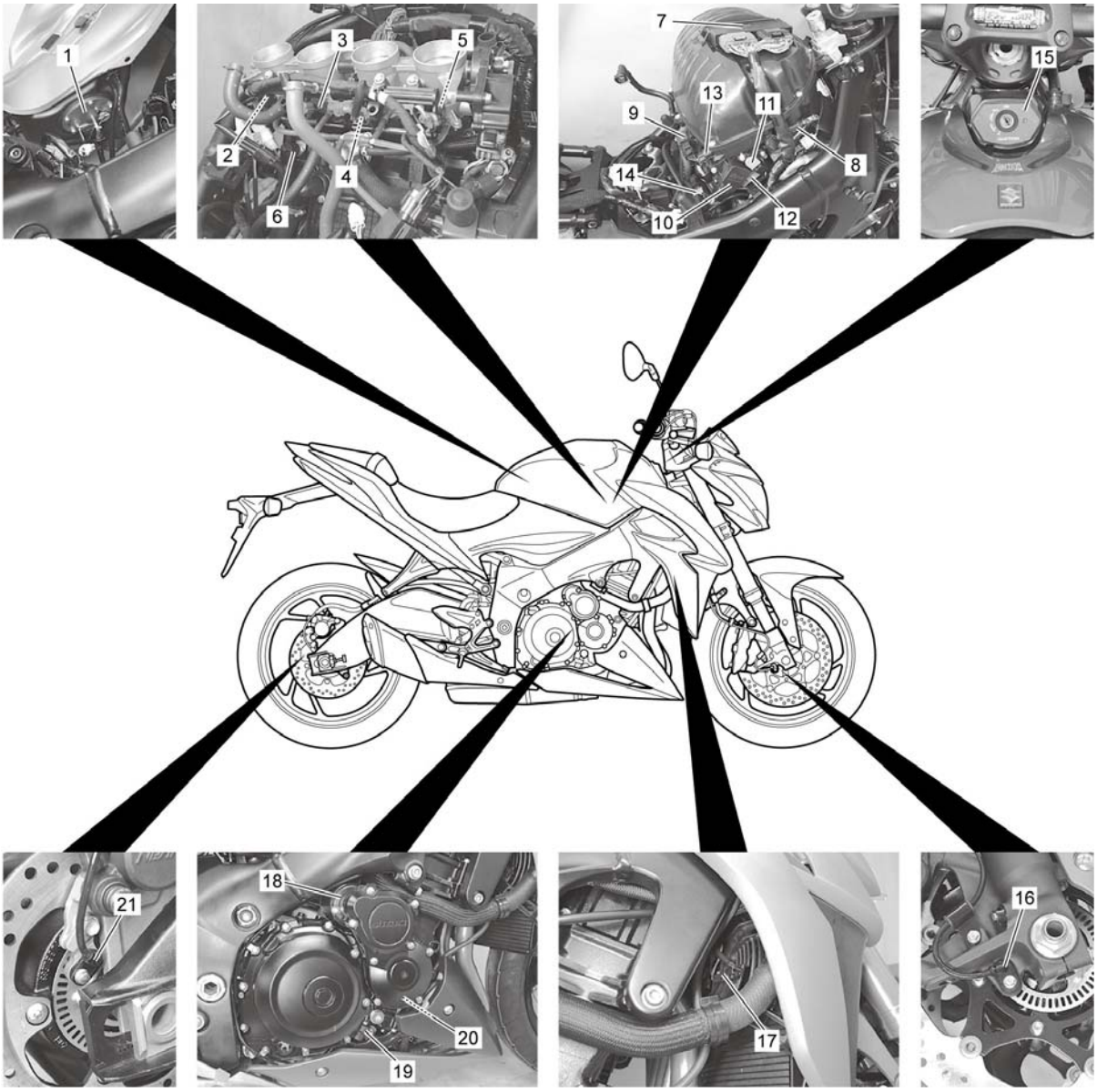

1.	Fuel pump/Fuel level gauge	8.	AP sensor	15.	Immobilizer antenna (If equipped)
2.	Fuel injector #1	9.	IAP sensor	16.	Front wheel speed sensor
3.	Fuel injector #2	10.	STV actuator	17.	Cooling fan
4.	Fuel injector #3	11.	STP sensor	18.	Starter motor
5.	Fuel injector #4	12.	TP sensor	19.	Oil pressure switch
6.	ECT sensor	13.	IAT sensor	20.	CKP sensor

7.	ECM	14.	EVAP system purge control solenoid valve (If equipped)	21.	Rear wheel speed sensor

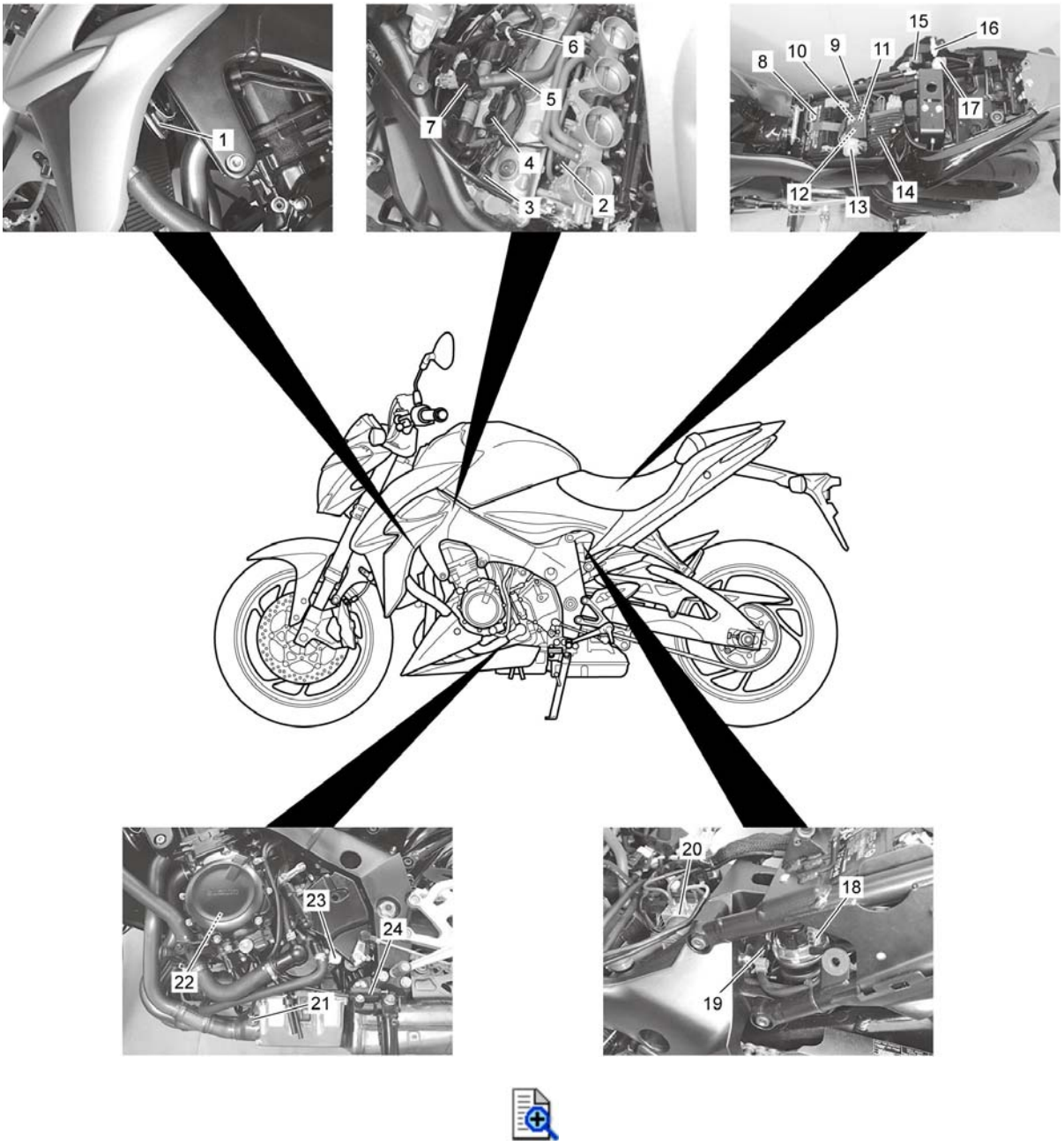

1.	Horn	9.	Fuse box	17.	Mode select coupler (6P)
2.	ISC valve	10.	Cooling fan relay	18.	TO sensor
3.	Ignition coil #1	11.	Side-stand relay	19.	EXCV actuator
4.	Ignition coil #2	12.	Fuel pump relay	20.	ABS control unit/HU
5.	Ignition coil #3	13.	Starter relay/Main fuse	21.	HO2 sensor
6.	Ignition coil #4	14.	Regulator/rectifier	22.	Generator
7.	PAIR control solenoid valve	15.	Turn signal relay	23.	GP switch

8.	Battery	16.	Mode select coupler (2P)	24.	Side-stand switch

Wiring Harness Routing Diagram

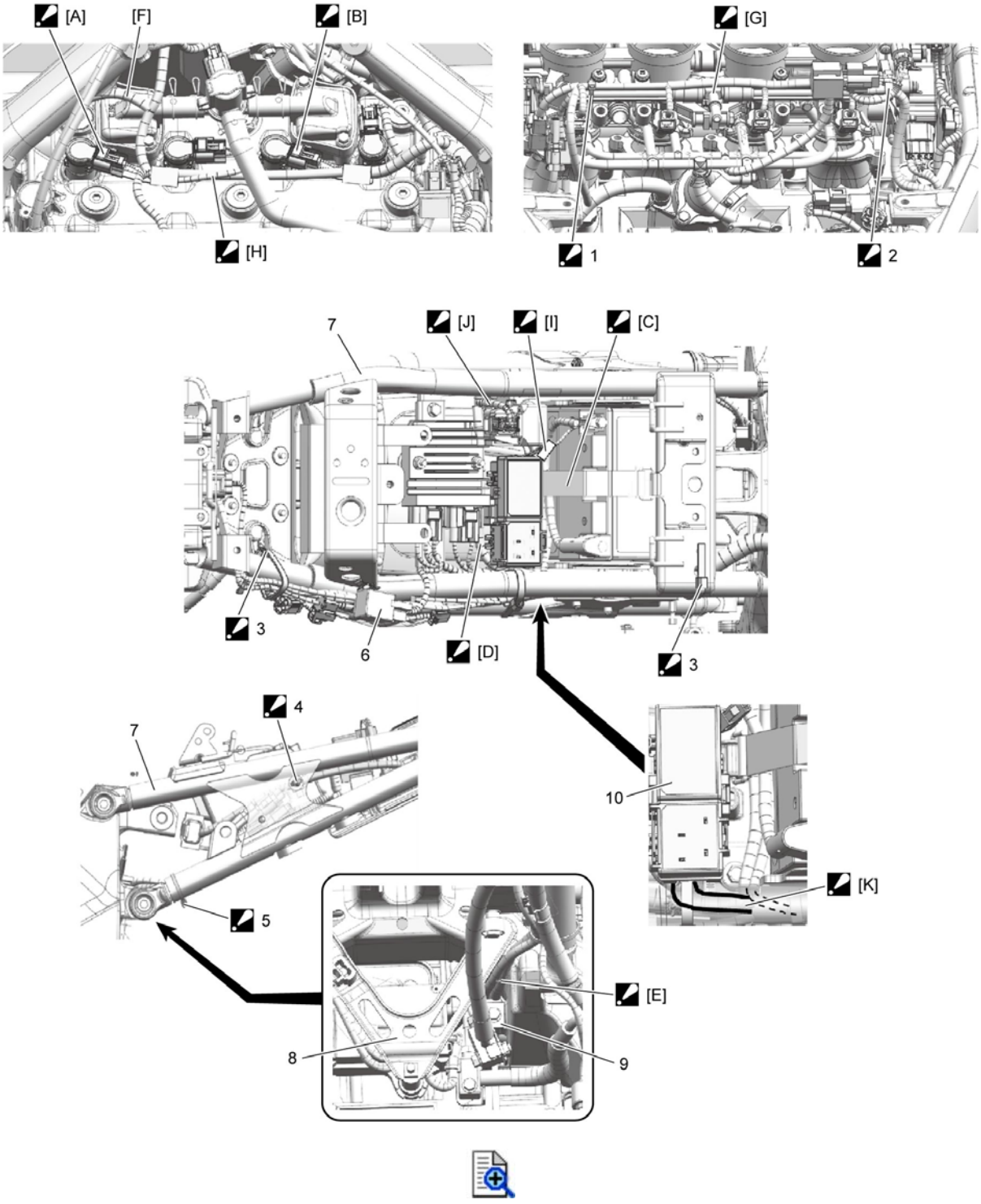

[A]:	Touch the ignition coil/plug cap #1 to the PAIR reed valve cover.	1.	Clamp : Clamp the green tape position of the wiring harness. Cut off the excess tip of the clamp.
[B]:	Touch the ignition coil/plug cap #3 to the PAIR reed valve cover. Before connecting the ignition coil/plug cap #1,	2.	Clamp : Clamp the wiring harness on the L-shape guide.

	connect the ignition coil/plug cap #3.		
[C]:	Pass the battery (+) lead wire and starter motor lead wire into the battery band.	3.	Clamp : Pass the clamp into the hole of frame.
[D]:	Pass the branch wire behind the relay box.	4.	Clamp : After connecting the EXCVA coupler, set the clamp into the hole of the right upper side of the plate.
[E]:	Pass the starter motor lead wire above the rear brake hose bracket. Pass the starter motor lead wire outside of the EXCVA bracket.	5.	Clamp : Clamp the EXCVA lead wire. Cut off the excess tip of the clamp.
[F]:	To horn	6.	Turn signal relay
[G]:	Pass the wiring harness above the nipple joint.	7.	Seat rail
[H]:	Pass the ignition coil/plug cap #2 above the main line.	8.	EXCVA bracket
[I]:	Pass the battery (–) lead wire (thin line) above the battery (+) lead wire and starter motor lead wire.	9.	Rear brake hose bracket
[J]:	Pass the starter motor lead wire to the left side of the starter relay coupler. Do not pass the behind of the starter relay.	10.	Relay box
[K]:	Pass the fuse branch wire under the frame and do not pass the upper of the starter motor lead wire and battery (–) lead wire.		

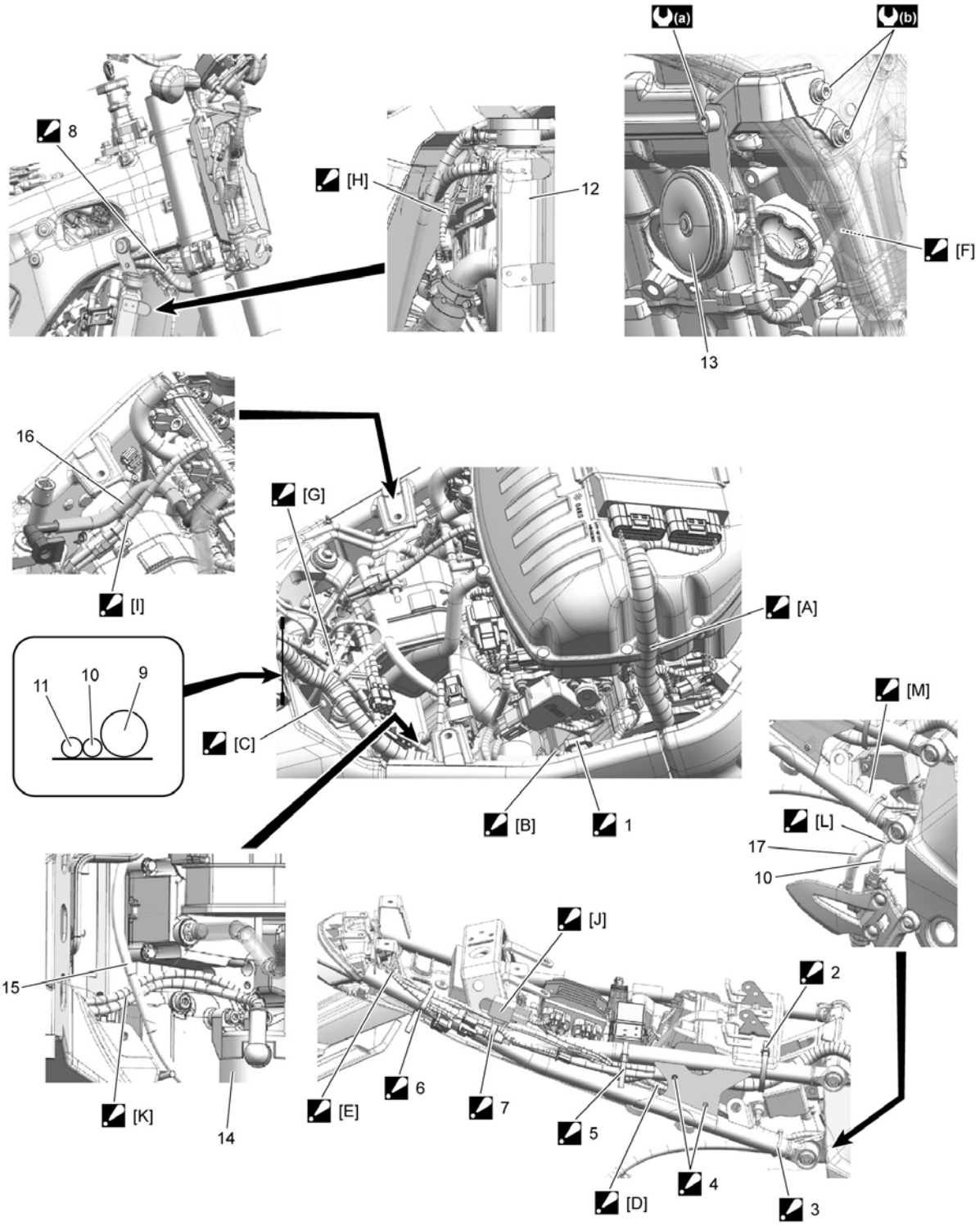

[A]:	Pass the ECM lead wire into the groove of air cleaner box.	4.	Clamp : Set the clamp into the hole of the plate.
[B]:	Pass the CKP sensor lead wire in front of the water hose and air bleed hose. Pass the CKP sensor lead wire under the rib of frame.	5.	Clamp : Clamp the wiring harness, regulator/rectifier lead wire and rear turn signal lead wires (license plate light lead wire).

[C]:	Set the clamp into the hole of plate.	6.	Clamp : Clamp the white tape position of the wiring harness. Clamp the rear turn signal lead wires and license plate light lead wire.
[D]:	Set the wiring harness, starter motor lead wire from above.	7.	Clamp : Clamp the turn signal relay, rear turn signal lead wires, license plate light lead wire and wiring harness.
[E]:	Pass the wiring harness to the inside of plate.	8.	Clamp : Set the clamp into the hole of plate.
[F]:	Pass the horn lead wire outside of the front brake hose.	9.	Main harness
[G]:	Pass the ABS control unit lead wire and rear brake light switch lead wire under the brake hose.	10.	Rear brake light switch lead wire
[H]:	Pass the cooling fan motor lead wire to the inside and lower side of reservoir tank inlet hose, air bleed hose and clutch cable.	11.	Rear wheel speed sensor lead wire.
[I]:	Pass the fuel pump lead wire above the fuel feed hose.	12.	Radiator
[J]:	Turn signal relay touch the clamp.	13.	Horn
[K]:	Pass the starter motor lead wire and engine ground lead wire under the clutch cable.	14.	Starter motor
[L]:	Pass the rear brake light switch lead wire above the rear reservoir tank hose.	15.	Clutch cable
[M]:	Pass the rear brake light switch lead wire behind of the starter motor lead wire and battery (–) lead wire.	16.	Fuel feed hose
1.	Clamp : Insert the guide to the rib center of frame.	17.	Rear reservoir tank hose
2.	Clamp : Clamp the white tape position of the wiring harness. Clamp the rear wheel speed sensor lead wire and rear brake light switch lead wire. Pass the clamp into the hole of frame.	(a):	22 N·m (2.2 kgf-m, 16.5 lbf-ft)
3.	Clamp : Clamp the starter motor lead wire, battery (–) lead wire and rear brake light switch lead wire. Cut off the excess tip of the clamp.	(b):	14 N·m (1.4 kgf-m, 10.5 lbf-ft)

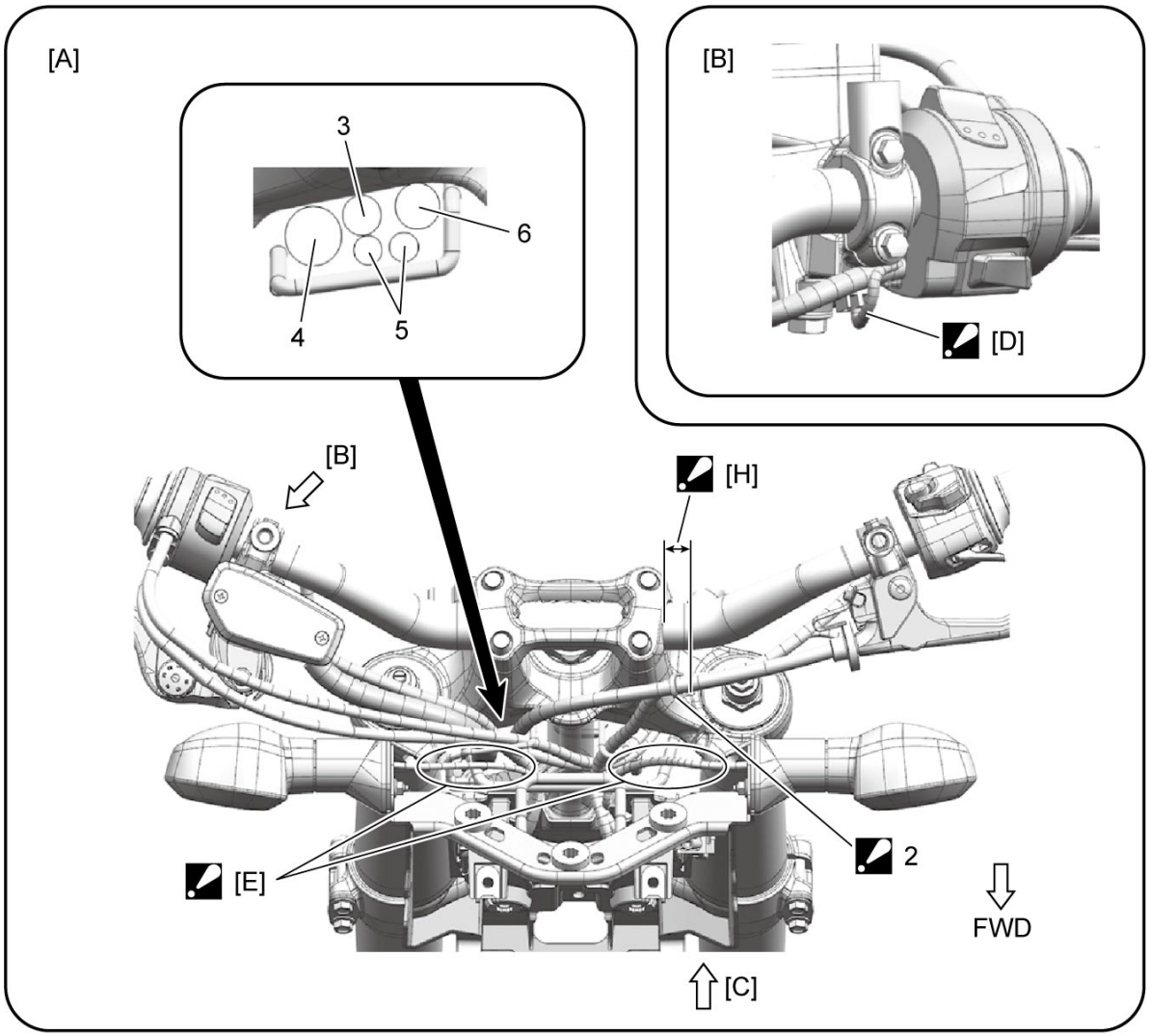
[A]
3
6
4
5
[B]
[D]
[B]
[H]
[E]
2
FWD
[C]

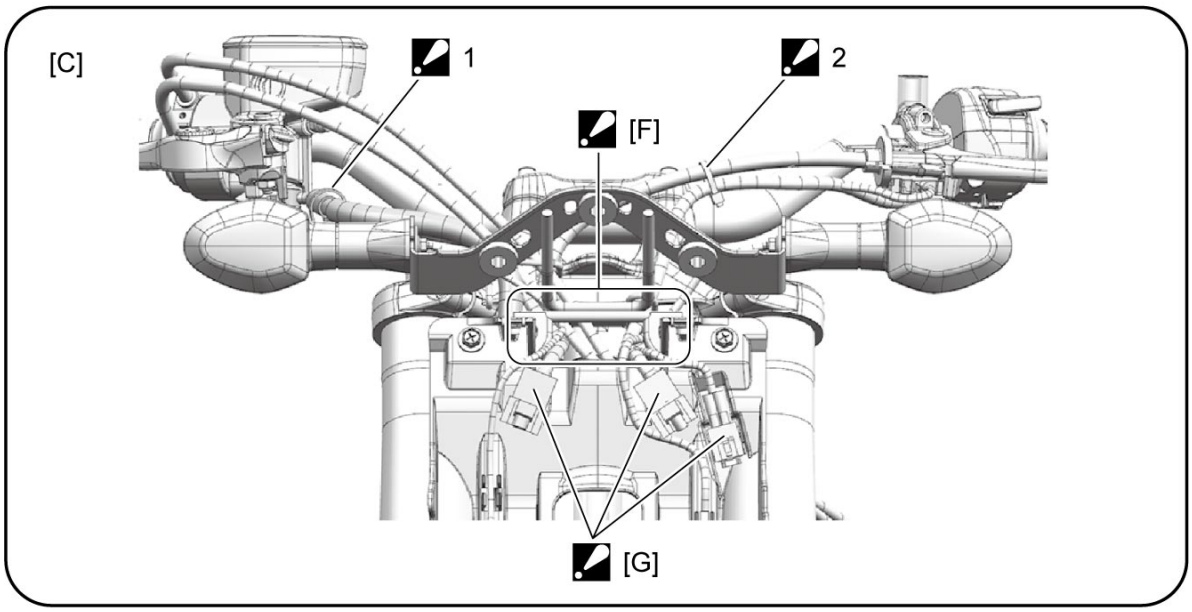
[C]
1
2
[F]
[G]

[A]:	GSX-S1000/A	[H]:	Set the clamp within 10 – 50 mm (0.39 –
[B]:	VIEW [B]	1.	Clamp : Clamp the front brake hose and right handle switch lead wire.

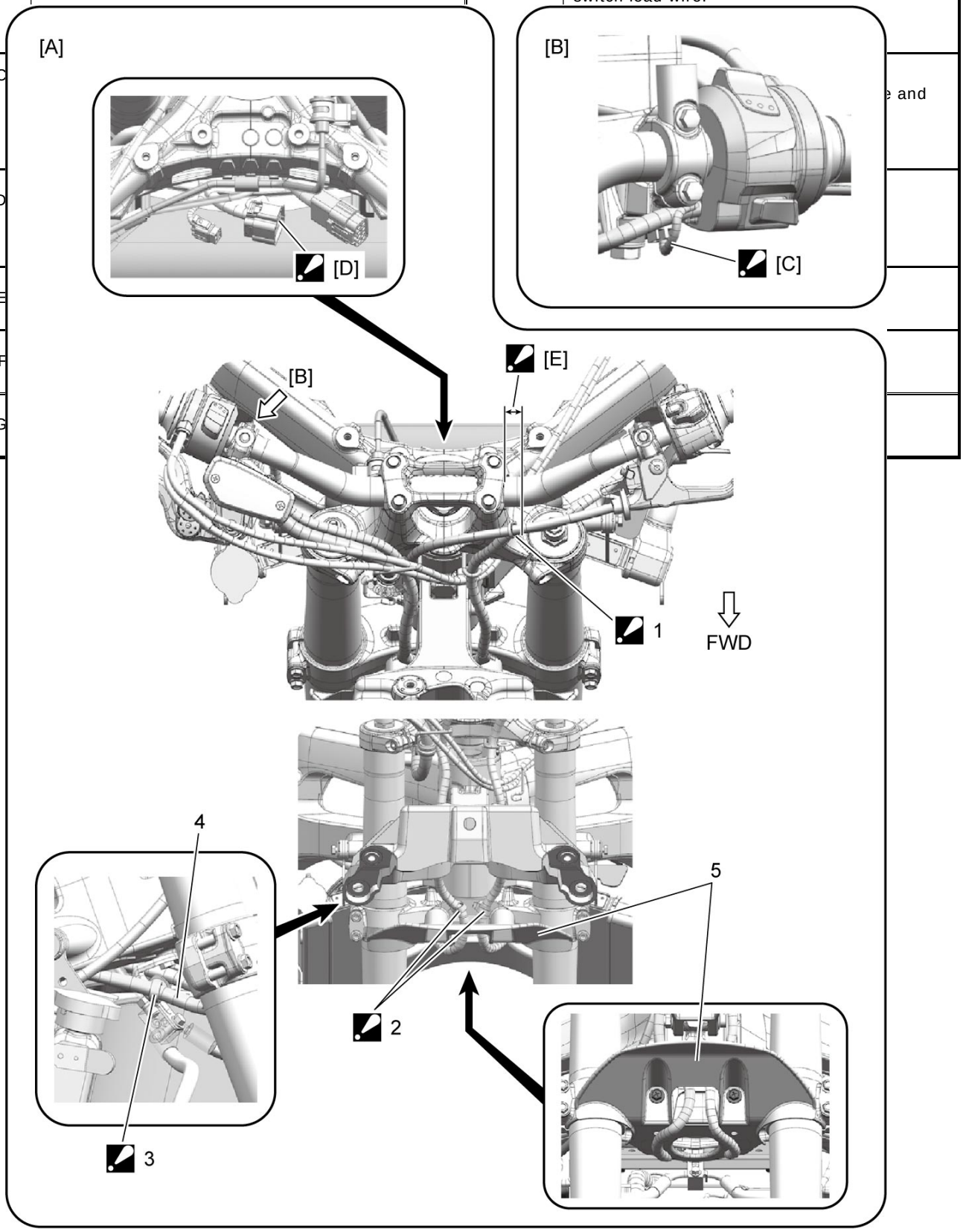

[A]:	GSX-S1000F/FA	1.	Clamp : Clamp the left handle switch lead wire and clutch cable. Cut off the excess tip of the clamp. Clamp end should face downward.
[B]:	VIEW [B]	2.	Clamp : Set the clamp into the hole of lower bracket cover.
[C]:	Pass the front brake switch lead wire branch wire under the right handle switch lead wire, and pass the right side of union bolt of front brake master cylinder.	3.	Clamp : Set the clamp into the hole of front brake hose lower clamp.
[D]:	Fit the left handle switch coupler to the hole of radiator heat shield.	4.	Right handle switch lead wire.
[E]:	Set the clamp within 10 – 50 mm (0.39 – 1.96 in) from the handlebar holder end.	5.	Lower bracket cover

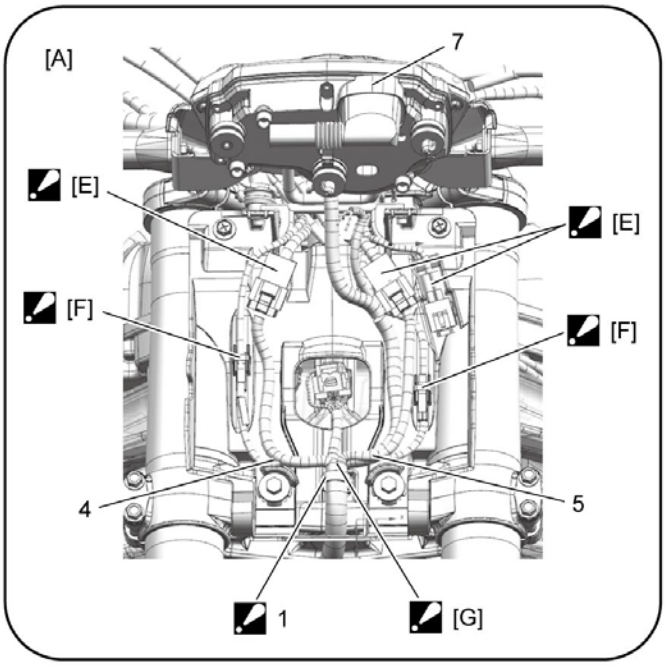

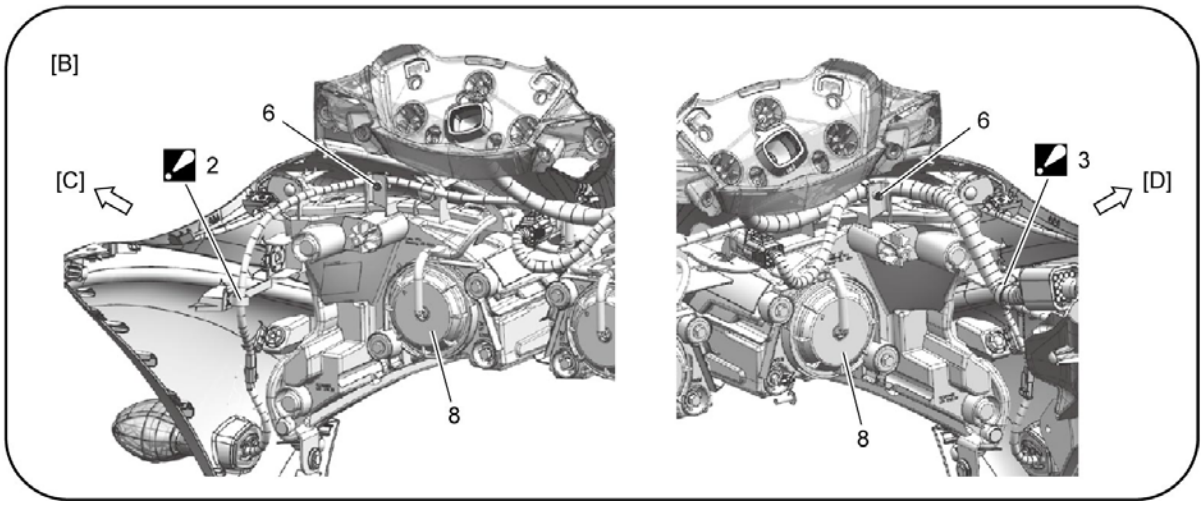

[A]:	GSX-S1000/A	2.	Clamp : Clamp the wiring harness No. 2.
[B]:	GSX-S1000F/FA	3.	Clamp : Clamp the wiring harness No. 2 and right front turn signal light lead wire.
[C]:	Left side	4.	Right handle switch lead wire, right front turn signal lead wire.
[D]:	Right side	5.	Combination meter lead wire, position light lead wire (If equipped), left handle switch lead wire, left front turn signal lead wire.
[E]:	Insert the protrusion of couplers into the hole of rear body cowling.	6.	Fixed clamp
[F]:	Set the front turn signal lead wire coupler to the rib of rear body cowling.	7.	Combination meter

[G]:	Do not twist the wiring harness.	8.	Headlight
1.	Clamp : Set the clamp into the hole of rear body cowling.		

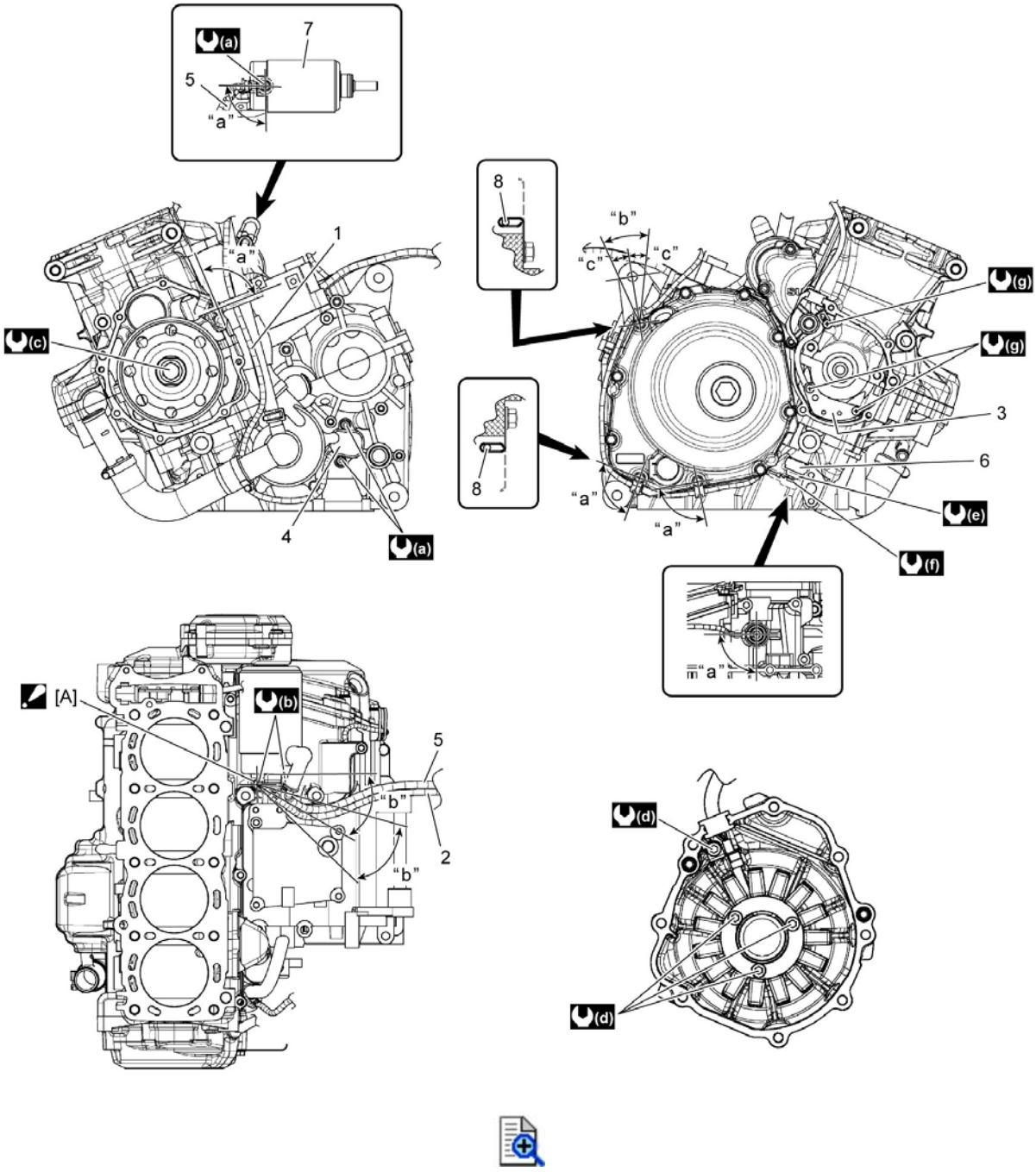

[A]:	Install the battery (–) lead wire within range of 15° – 45° from the frame surface of starter motor as shown.	"b":	30°
1.	Gear position switch lead wire	"c":	15°
2.	Battery (–) lead wire	(a):	6 N·m (0.61 kgf-m, 4.45 lbf-ft)

3.	CKP sensor	(b):	10 N·m (1.0 kgf-m, 7.5 lbf-ft)
4.	Gear position switch	(c):	160 N·m (16.3 kgf-m, 118.0 lbf-ft)
5.	Starter motor lead wire	(d):	11 N·m (1.1 kgf-m, 8.5 lbf-ft)
6.	Oil pressure switch	(e):	13 N·m (1.3 kgf-m, 9.5 lbf-ft)
7.	Starter motor	(f):	1.5 N·m (0.15 kgf-m, 1.10 lbf-ft)
8.	Oil pressure switch lead wire	(g):	4.5 N·m (0.46 kgf-m, 3.35 lbf-ft)
“a”:	75° – 105°		

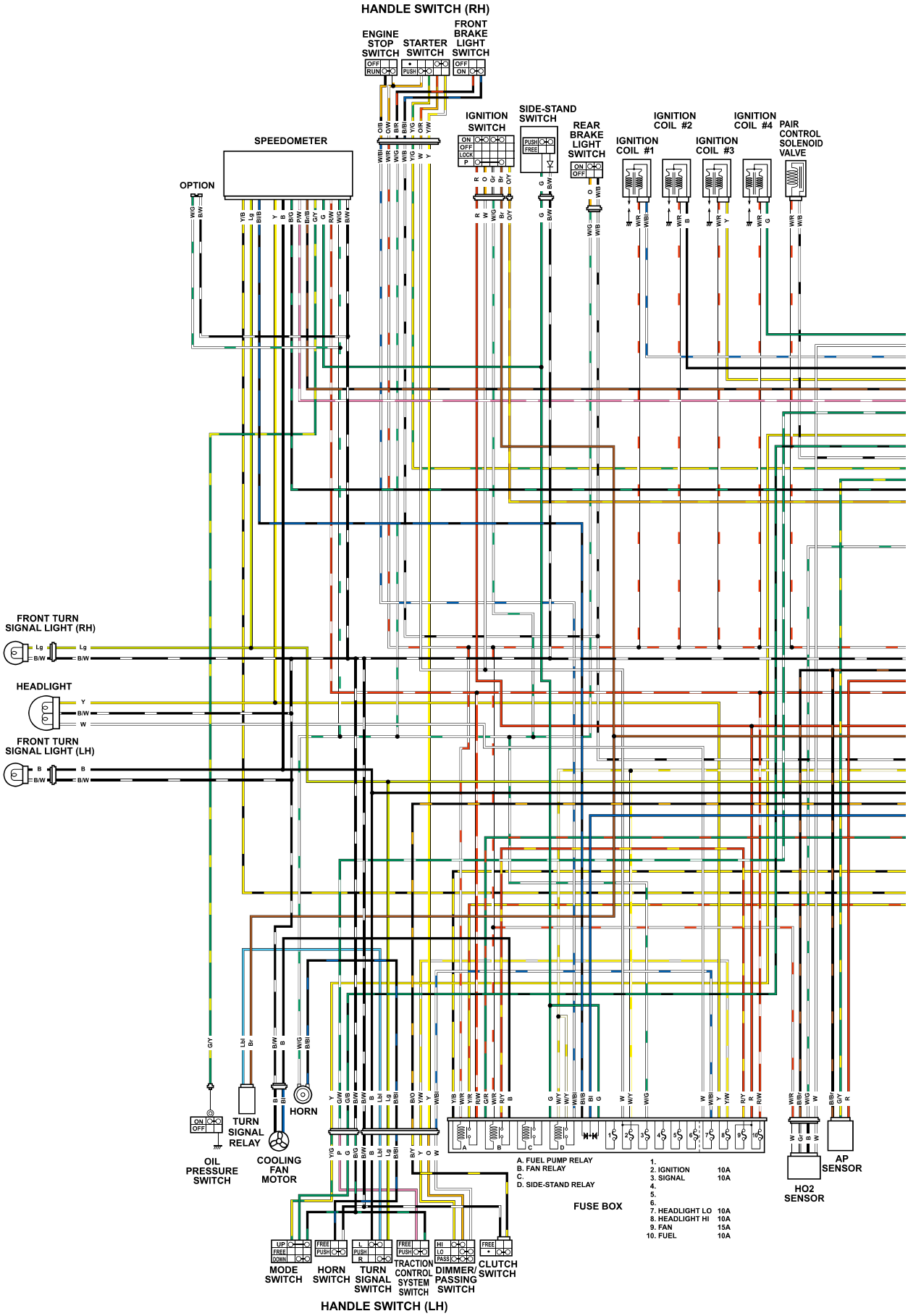
HANDLE SWITCH (RH)
ENGINE STOP SWITCH
STARTER SWITCH
FRONT BRAKE LIGHT SWITCH
IGNITION SWITCH
SIDE-STAND SWITCH
REAR BRAKE LIGHT SWITCH
IGNITION COIL #1
IGNITION COIL #2
IGNITION COIL #3
IGNITION COIL #4
PAIR CONTROL SOLENOID VALVE
SPEEDOMETER
OPTION
FRONT TURN SIGNAL LIGHT (RH)
HEADLIGHT
FRONT TURN SIGNAL LIGHT (LH)
HORN
OIL PRESSURE SWITCH
TURN SIGNAL RELAY
COOLING FAN MOTOR
A. FUEL PUMP RELAY
B. FAN RELAY
C.
D. SIDE-STAND RELAY
FUSE BOX
1.
2. IGNITION 10A
3. SIGNAL 10A
4.
5.
6.
7. HEADLIGHT LO 10A
8. HEADLIGHT HI 10A
9. FAN 15A
10. FUEL 10A
HO2 SENSOR
AP SENSOR
MODE SWITCH
HORN SWITCH
TURN SIGNAL SWITCH
TRACTION CONTROL SYSTEM SWITCH
DIMMER/ PASSING SWITCH
CLUTCH SWITCH
HANDLE SWITCH (LH)

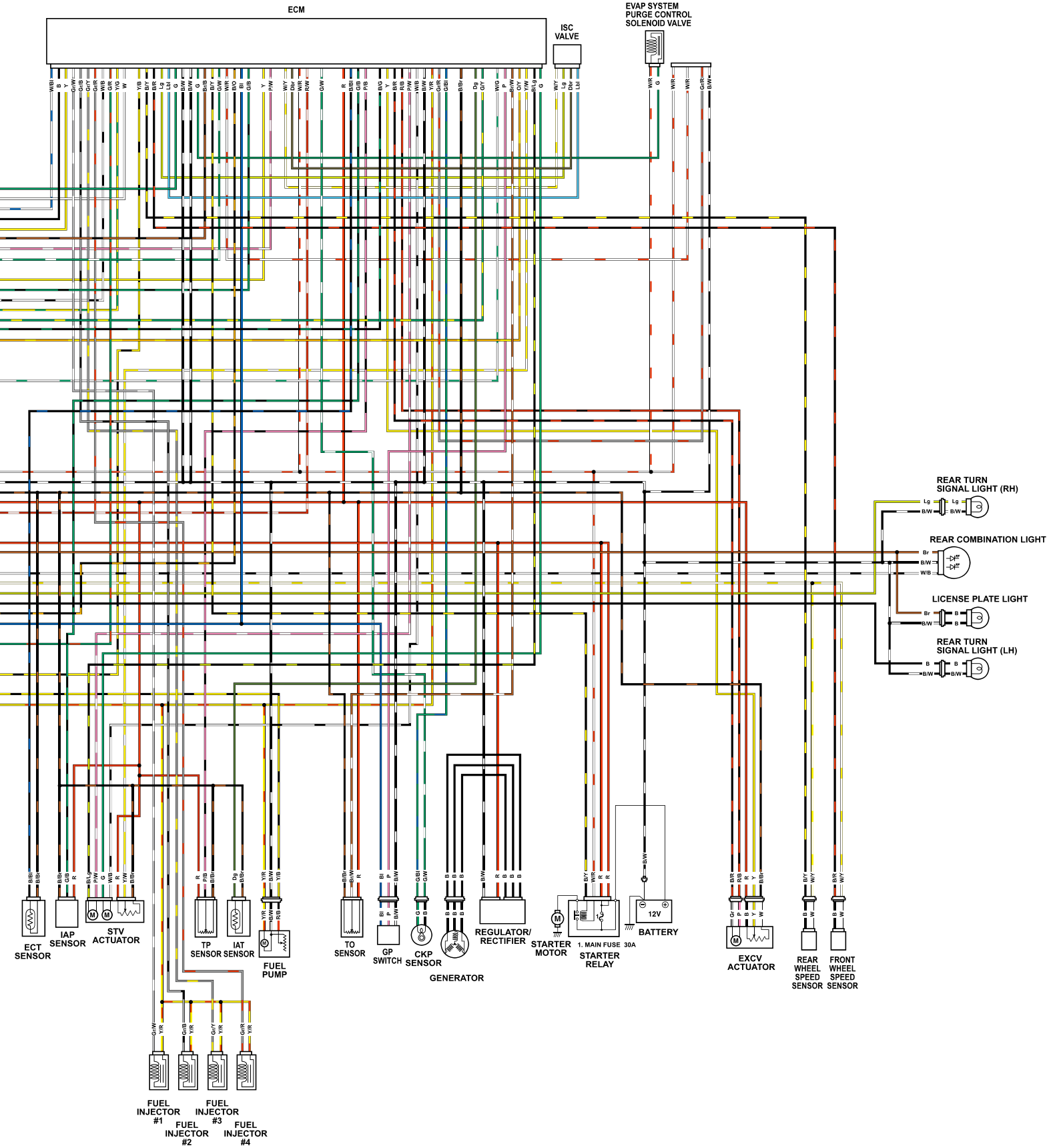
ECM
ISC VALVE
EVAP SYSTEM PURGE CONTROL SOLENOID VALVE
REAR TURN SIGNAL LIGHT (RH)
REAR COMBINATION LIGHT
LICENSE PLATE LIGHT
REAR TURN SIGNAL LIGHT (LH)
ECT SENSOR
IAP SENSOR
STV ACTUATOR
TP SENSOR
IAT SENSOR
FUEL PUMP
TO SENSOR
GP SWITCH
CKP SENSOR
GENERATOR
REGULATOR/ RECTIFIER
STARTER MOTOR
1. MAIN FUSE 30A
STARTER RELAY
12V
BATTERY
EXCV ACTUATOR
REAR WHEEL SPEED SENSOR
FRONT WHEEL SPEED SENSOR
FUEL INJECTOR #1
FUEL INJECTOR #2
FUEL INJECTOR #3
FUEL INJECTOR #4

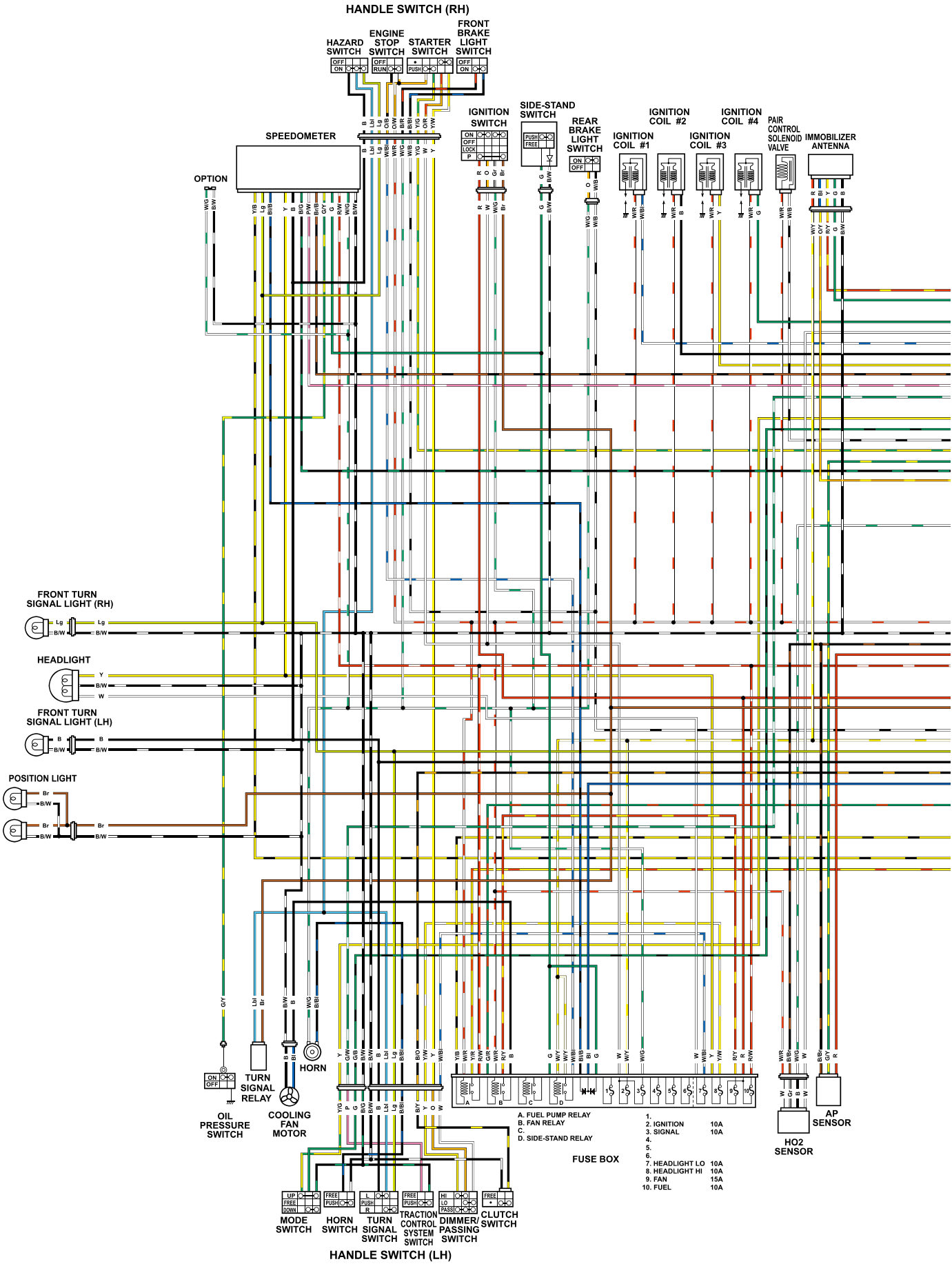
HANDLE SWITCH (RH)
HAZARD SWITCH
ENGINE STOP SWITCH
STARTER SWITCH
FRONT BRAKE LIGHT SWITCH
SPEEDOMETER
OPTION
IGNITION SWITCH
SIDE-STAND SWITCH
REAR BRAKE LIGHT SWITCH
IGNITION COIL #1
IGNITION COIL #2
IGNITION COIL #3
IGNITION COIL #4
PAIR CONTROL SOLENOID VALVE
IMMOBILIZER ANTENNA
FRONT TURN SIGNAL LIGHT (RH)
HEADLIGHT
FRONT TURN SIGNAL LIGHT (LH)
POSITION LIGHT
HORN
OIL PRESSURE SWITCH
TURN SIGNAL RELAY
COOLING FAN MOTOR
A. FUEL PUMP RELAY
B. FAN RELAY
C.
D. SIDE-STAND RELAY
FUSE BOX
1.
2. IGNITION 10A
3. SIGNAL 10A
4.
5.
6.
7. HEADLIGHT LO 10A
8. HEADLIGHT HI 10A
9. FAN 15A
10. FUEL 10A
HO2 SENSOR
AP SENSOR
MODE SWITCH
HORN SWITCH
TURN SIGNAL SWITCH
TRACTION CONTROL SYSTEM SWITCH
DIMMER/ PASSING SWITCH
CLUTCH SWITCH
HANDLE SWITCH (LH)

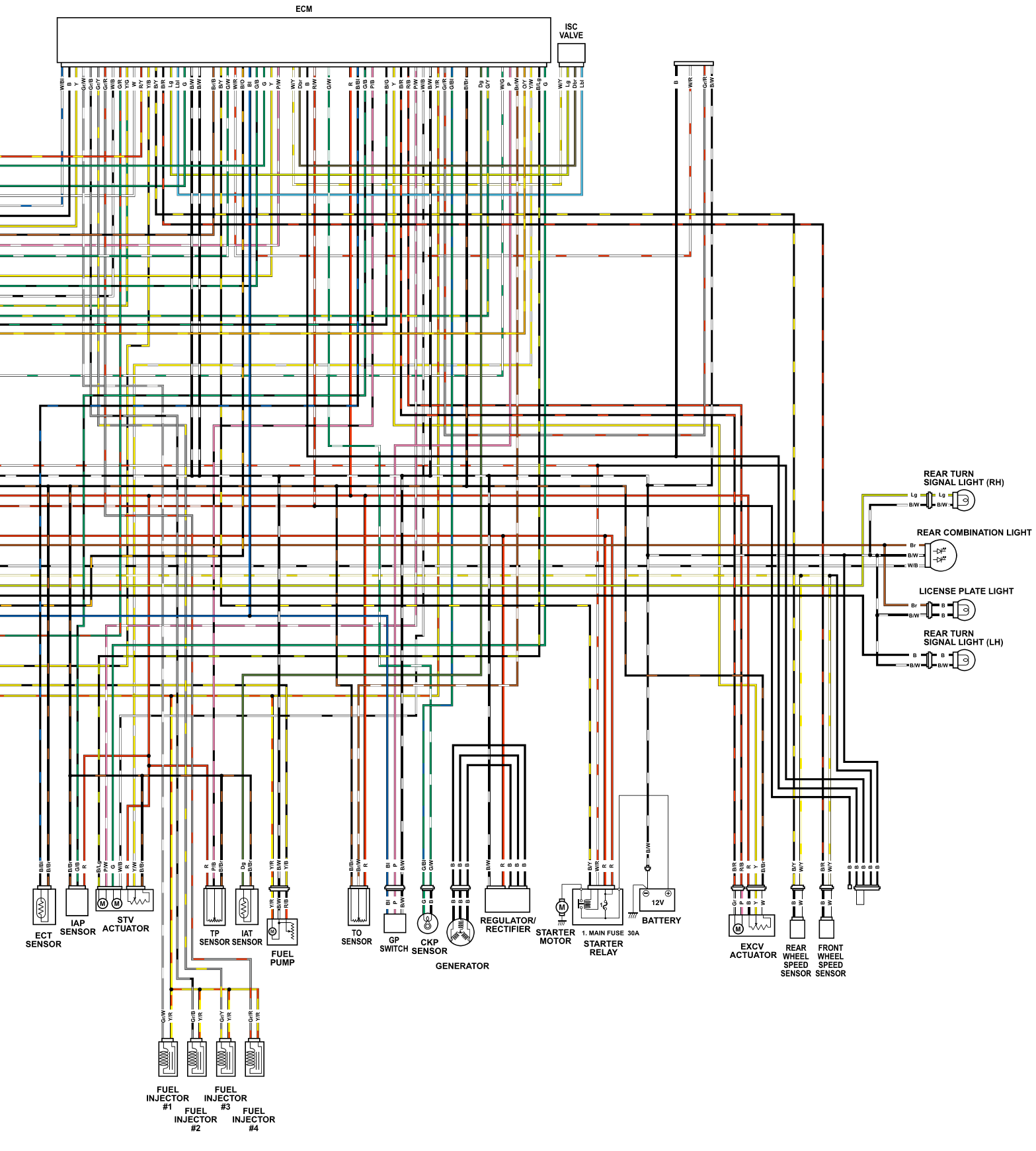
ECM
ISC VALVE
REAR TURN SIGNAL LIGHT (RH)
REAR COMBINATION LIGHT
LICENSE PLATE LIGHT
REAR TURN SIGNAL LIGHT (LH)
ECT SENSOR
IAP SENSOR
STV ACTUATOR
TP SENSOR
IAT SENSOR
FUEL PUMP
TO SENSOR
GP SWITCH
CKP SENSOR
GENERATOR
REGULATOR/ RECTIFIER
STARTER MOTOR
1. MAIN FUSE 30A
STARTER RELAY
12V
BATTERY
EXCV ACTUATOR
REAR WHEEL SPEED SENSOR
FRONT WHEEL SPEED SENSOR
FUEL INJECTOR #1
FUEL INJECTOR #2
FUEL INJECTOR #3
FUEL INJECTOR #4

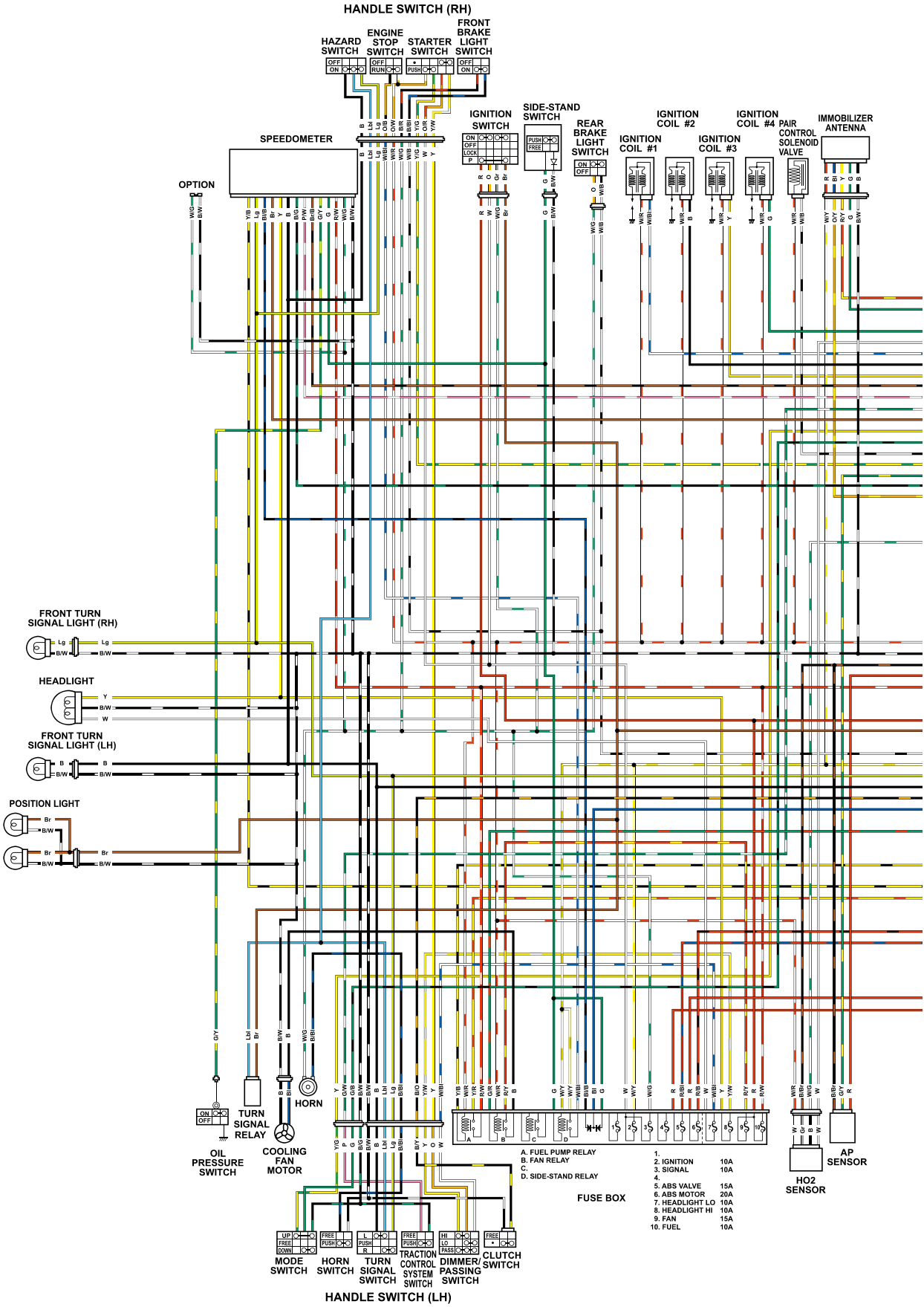
HANDLE SWITCH (RH)
HAZARD SWITCH
ENGINE STOP SWITCH
STARTER SWITCH
FRONT BRAKE LIGHT SWITCH
IGNITION SWITCH
SIDE-STAND SWITCH
REAR BRAKE LIGHT SWITCH
IGNITION COIL #1
IGNITION COIL #2
IGNITION COIL #3
IGNITION COIL #4
PAIR CONTROL SOLENOID VALVE
IMMOBILIZER ANTENNA
SPEEDOMETER
OPTION
FRONT TURN SIGNAL LIGHT (RH)
HEADLIGHT
FRONT TURN SIGNAL LIGHT (LH)
POSITION LIGHT
OIL PRESSURE SWITCH
TURN SIGNAL RELAY
COOLING FAN MOTOR
HORN
A. FUEL PUMP RELAY
B. FAN RELAY
C.
D. SIDE-STAND RELAY
FUSE BOX
1.
2. IGNITION 10A
3. SIGNAL 10A
4.
5. ABS VALVE 15A
6. ABS MOTOR 20A
7. HEADLIGHT LO 10A
8. HEADLIGHT HI 10A
9. FAN 15A
10. FUEL 10A
HO2 SENSOR
AP SENSOR
MODE SWITCH
HORN SWITCH
TURN SIGNAL SWITCH
TRACTION CONTROL SYSTEM SWITCH
DIMMER/ PASSING SWITCH
CLUTCH SWITCH
HANDLE SWITCH (LH)

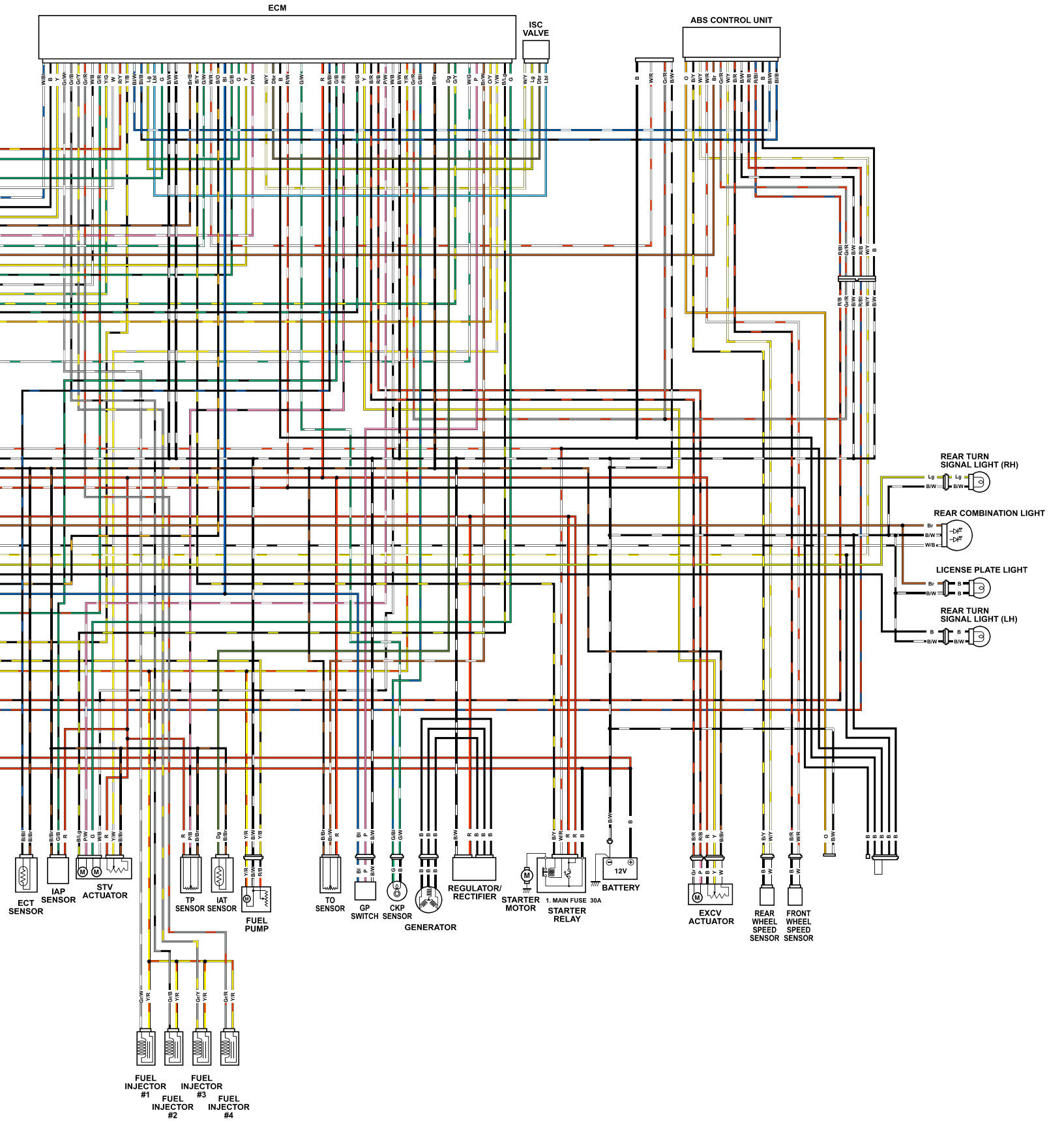
ECM
ISC VALVE
ABS CONTROL UNIT
REAR TURN SIGNAL LIGHT (RH)
REAR COMBINATION LIGHT
LICENSE PLATE LIGHT
REAR TURN SIGNAL LIGHT (LH)
ECT SENSOR
IAP SENSOR
STV ACTUATOR
TP SENSOR
IAT SENSOR
FUEL PUMP
TO SENSOR
GP SWITCH
CKP SENSOR
GENERATOR
REGULATOR/ RECTIFIER
STARTER MOTOR
1. MAIN FUSE 30A
STARTER RELAY
12V
BATTERY
EXCV ACTUATOR
REAR WHEEL SPEED SENSOR
FRONT WHEEL SPEED SENSOR
FUEL INJECTOR #1
FUEL INJECTOR #2
FUEL INJECTOR #3
FUEL INJECTOR #4

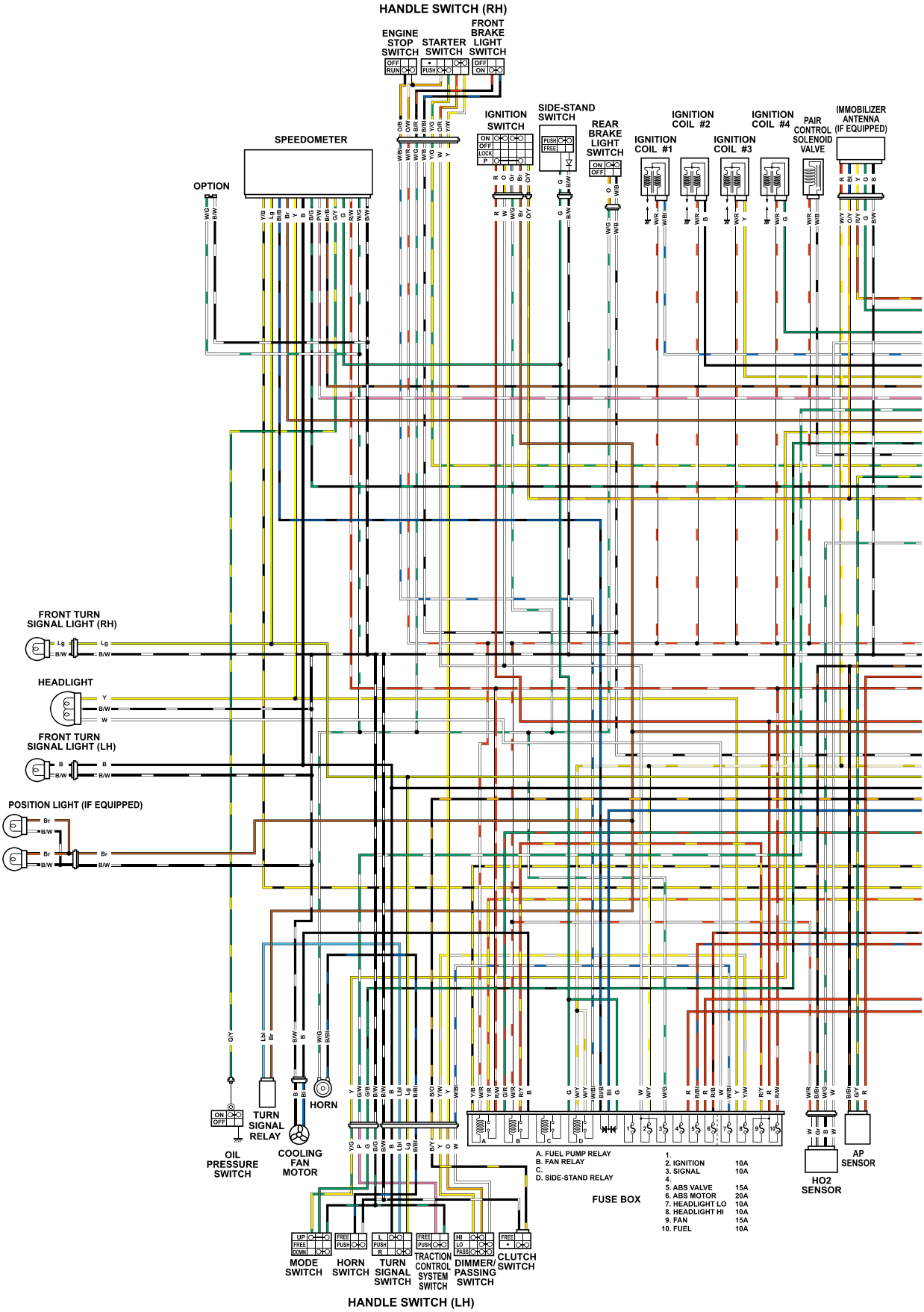
HANDLE SWITCH (RH)
ENGINE STOP SWITCH
STARTER SWITCH
FRONT BRAKE LIGHT SWITCH
IGNITION SWITCH
SIDE-STAND SWITCH
REAR BRAKE LIGHT SWITCH
IGNITION COIL #1
IGNITION COIL #2
IGNITION COIL #3
IGNITION COIL #4
PAIR CONTROL SOLENOID VALVE
IMMOBILIZER ANTENNA (IF EQUIPPED)
SPEEDOMETER
OPTION
FRONT TURN SIGNAL LIGHT (RH)
HEADLIGHT
FRONT TURN SIGNAL LIGHT (LH)
POSITION LIGHT (IF EQUIPPED)
TURN SIGNAL RELAY
HORN
OIL PRESSURE SWITCH
COOLING FAN MOTOR
A. FUEL PUMP RELAY
B. FAN RELAY
C.
D. SIDE-STAND RELAY
FUSE BOX
1.
2. IGNITION 10A
3. SIGNAL 10A
4.
5. ABS VALVE 15A
6. ABS MOTOR 20A
7. HEADLIGHT LO 10A
8. HEADLIGHT HI 10A
9. FAN 15A
10. FUEL 10A
HO2 SENSOR
AP SENSOR
MODE SWITCH
HORN SWITCH
TURN SIGNAL SWITCH
TRACTION CONTROL SYSTEM SWITCH
DIMMER/ PASSING SWITCH
CLUTCH SWITCH
HANDLE SWITCH (LH)

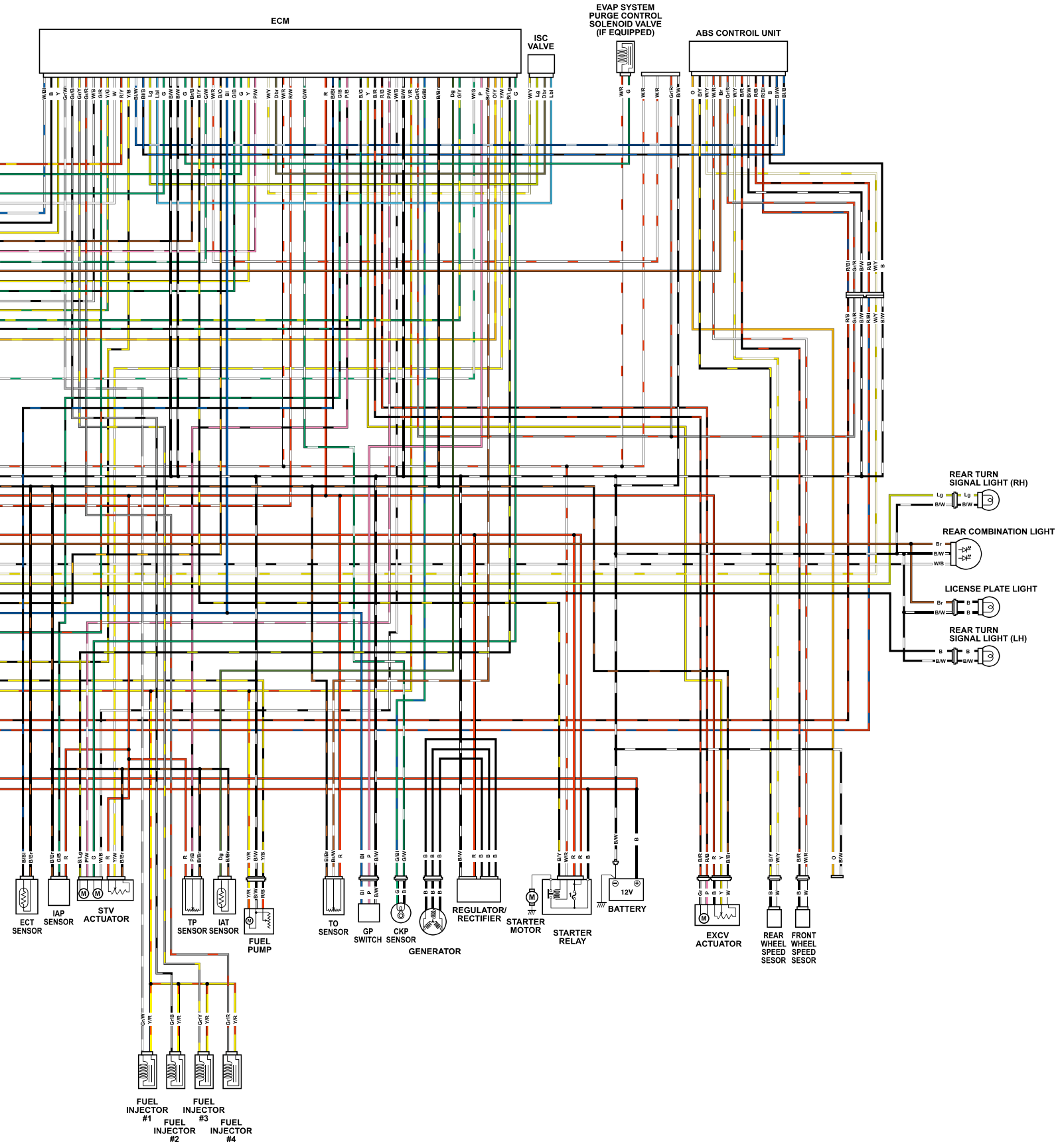
ECM
ISC VALVE
EVAP SYSTEM PURGE CONTROL SOLENOID VALVE (IF EQUIPPED)
ABS CONTROIL UNIT
REAR TURN SIGNAL LIGHT (RH)
REAR COMBINATION LIGHT
LICENSE PLATE LIGHT
REAR TURN SIGNAL LIGHT (LH)
ECT SENSOR
IAP SENSOR
STV ACTUATOR
TP SENSOR
IAT SENSOR
FUEL PUMP
TO SENSOR
GP SWITCH
CKP SENSOR
GENERATOR
REGULATOR/ RECTIFIER
STARTER MOTOR
STARTER RELAY
BATTERY
12V
EXCV ACTUATOR
REAR WHEEL SPEED SESOR
FRONT WHEEL SPEED SESOR
FUEL INJECTOR #1
FUEL INJECTOR #2
FUEL INJECTOR #3
FUEL INJECTOR #4

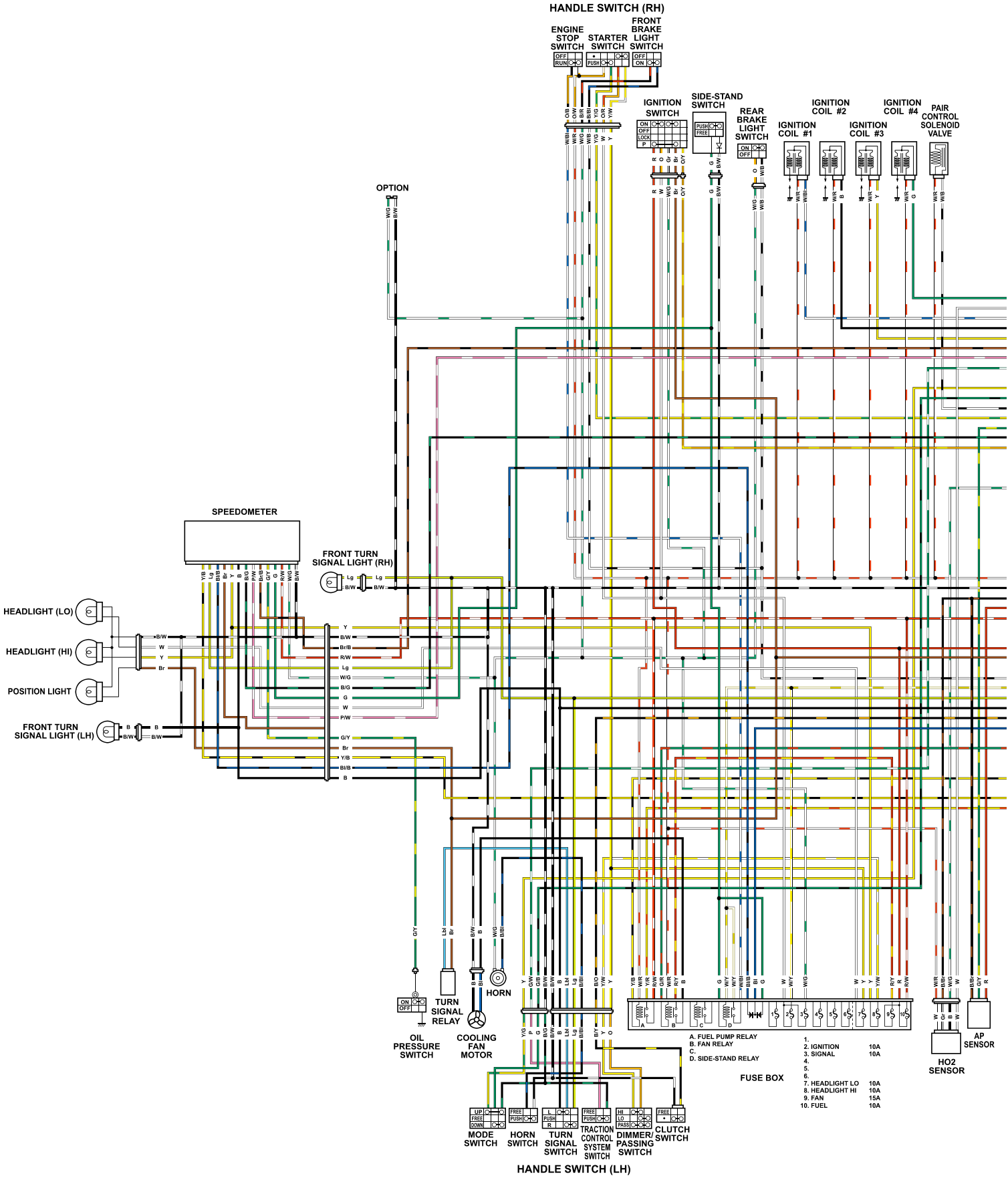
HANDLE SWITCH (RH)
ENGINE STOP SWITCH
STARTER SWITCH
FRONT BRAKE LIGHT SWITCH
IGNITION SWITCH
SIDE-STAND SWITCH
REAR BRAKE LIGHT SWITCH
IGNITION COIL #1
IGNITION COIL #2
IGNITION COIL #3
IGNITION COIL #4
PAIR CONTROL SOLENOID VALVE
OPTION
SPEEDOMETER
FRONT TURN SIGNAL LIGHT (RH)
HEADLIGHT (LO)
HEADLIGHT (HI)
POSITION LIGHT
FRONT TURN SIGNAL LIGHT (LH)
OIL PRESSURE SWITCH
TURN SIGNAL RELAY
HORN
COOLING FAN MOTOR
A. FUEL PUMP RELAY
B. FAN RELAY
C.
D. SIDE-STAND RELAY
FUSE BOX
1.
2. IGNITION 10A
3. SIGNAL 10A
4.
5.
6.
7. HEADLIGHT LO 10A
8. HEADLIGHT HI 10A
9. FAN 15A
10. FUEL 10A
HO2 SENSOR
AP SENSOR
MODE SWITCH
HORN SWITCH
TURN SIGNAL SWITCH
TRACTION CONTROL SYSTEM SWITCH
DIMMER/ PASSING SWITCH
CLUTCH SWITCH
HANDLE SWITCH (LH)

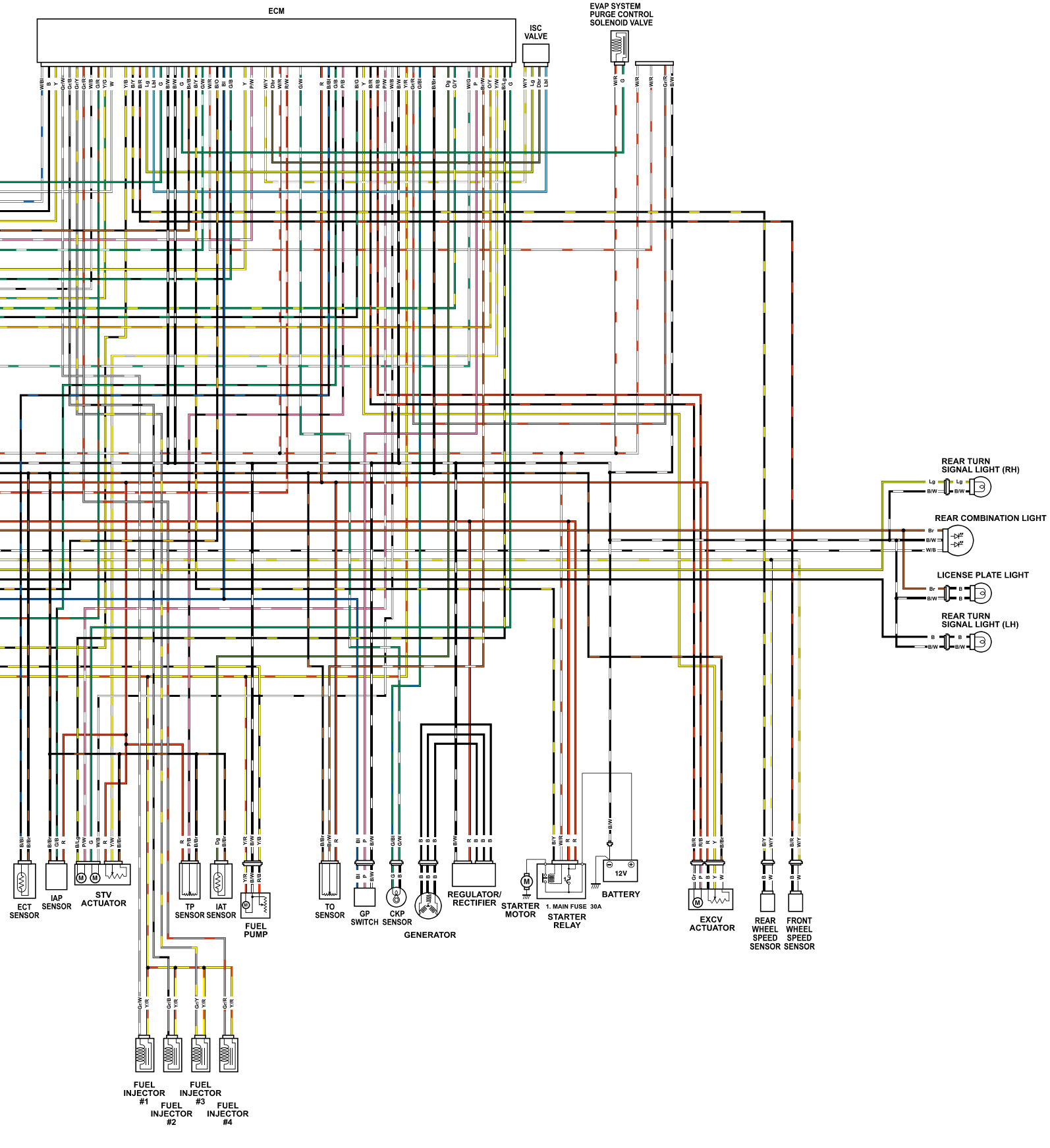
ECM
ISC VALVE
EVAP SYSTEM PURGE CONTROL SOLENOID VALVE
REAR TURN SIGNAL LIGHT (RH)
REAR COMBINATION LIGHT
LICENSE PLATE LIGHT
REAR TURN SIGNAL LIGHT (LH)
ECT SENSOR
IAP SENSOR
STV ACTUATOR
TP SENSOR
IAT SENSOR
FUEL PUMP
TO SENSOR
GP SWITCH
CKP SENSOR
GENERATOR
REGULATOR/ RECTIFIER
STARTER MOTOR
1. MAIN FUSE 30A
STARTER RELAY
12V
BATTERY
EXCV ACTUATOR
REAR WHEEL SPEED SENSOR
FRONT WHEEL SPEED SENSOR
FUEL INJECTOR #1
FUEL INJECTOR #2
FUEL INJECTOR #3
FUEL INJECTOR #4

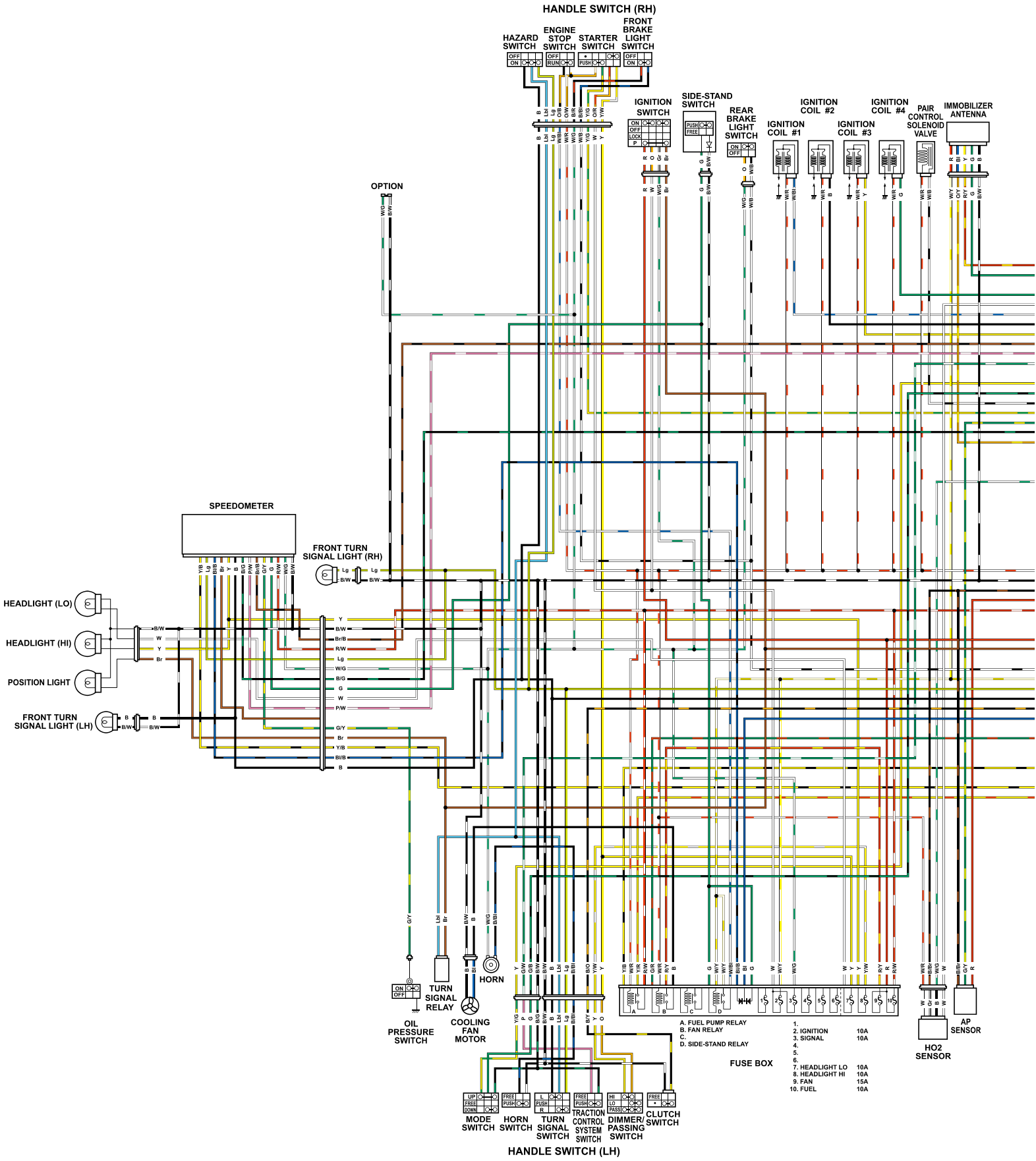
HANDLE SWITCH (RH)
HAZARD SWITCH
ENGINE STOP SWITCH
STARTER SWITCH
FRONT BRAKE LIGHT SWITCH
IGNITION SWITCH
SIDE-STAND SWITCH
REAR BRAKE LIGHT SWITCH
IGNITION COIL #1
IGNITION COIL #2
IGNITION COIL #3
IGNITION COIL #4
PAIR CONTROL SOLENOID VALVE
IMMOBILIZER ANTENNA
OPTION
SPEEDOMETER
FRONT TURN SIGNAL LIGHT (RH)
HEADLIGHT (LO)
HEADLIGHT (HI)
POSITION LIGHT
FRONT TURN SIGNAL LIGHT (LH)
OIL PRESSURE SWITCH
TURN SIGNAL RELAY
COOLING FAN MOTOR
HORN
A. FUEL PUMP RELAY
B. FAN RELAY
C.
D. SIDE-STAND RELAY
FUSE BOX
1.
2. IGNITION 10A
3. SIGNAL 10A
4.
5.
6.
7. HEADLIGHT LO 10A
8. HEADLIGHT HI 10A
9. FAN 15A
10. FUEL 10A
HO2 SENSOR
AP SENSOR
MODE SWITCH
HORN SWITCH
TURN SIGNAL SWITCH
TRACTION CONTROL SYSTEM SWITCH
DIMMER/ PASSING SWITCH
CLUTCH SWITCH
HANDLE SWITCH (LH)

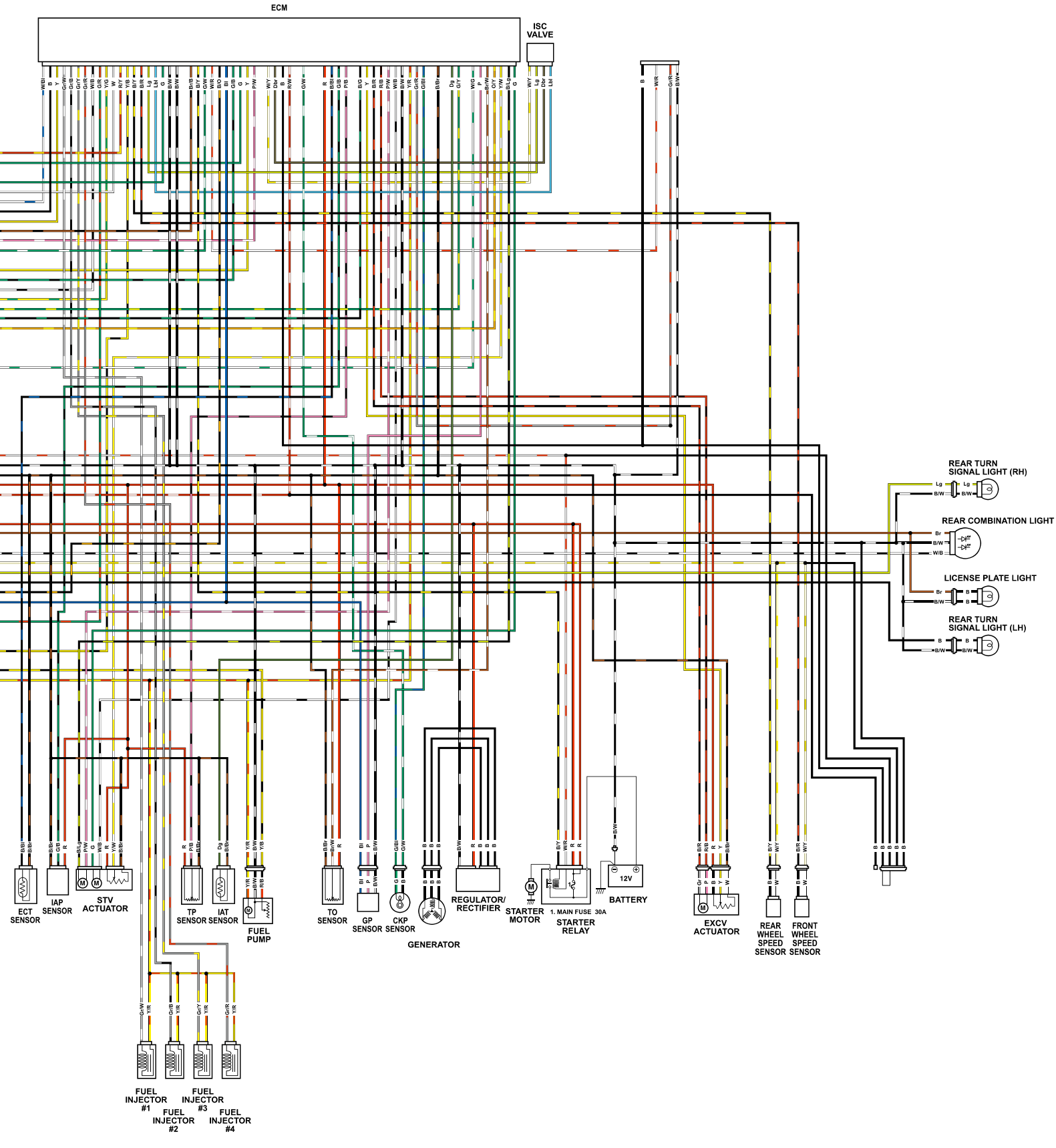
ECM
ISC VALVE
REAR TURN SIGNAL LIGHT (RH)
REAR COMBINATION LIGHT
LICENSE PLATE LIGHT
REAR TURN SIGNAL LIGHT (LH)
ECT SENSOR
IAP SENSOR
STV ACTUATOR
TP SENSOR
IAT SENSOR
FUEL PUMP
TO SENSOR
GP SENSOR
CKP SENSOR
GENERATOR
REGULATOR/ RECTIFIER
STARTER MOTOR
1. MAIN FUSE 30A
STARTER RELAY
12V
BATTERY
EXCV ACTUATOR
REAR WHEEL SPEED SENSOR
FRONT WHEEL SPEED SENSOR
FUEL INJECTOR #1
FUEL INJECTOR #2
FUEL INJECTOR #3
FUEL INJECTOR #4

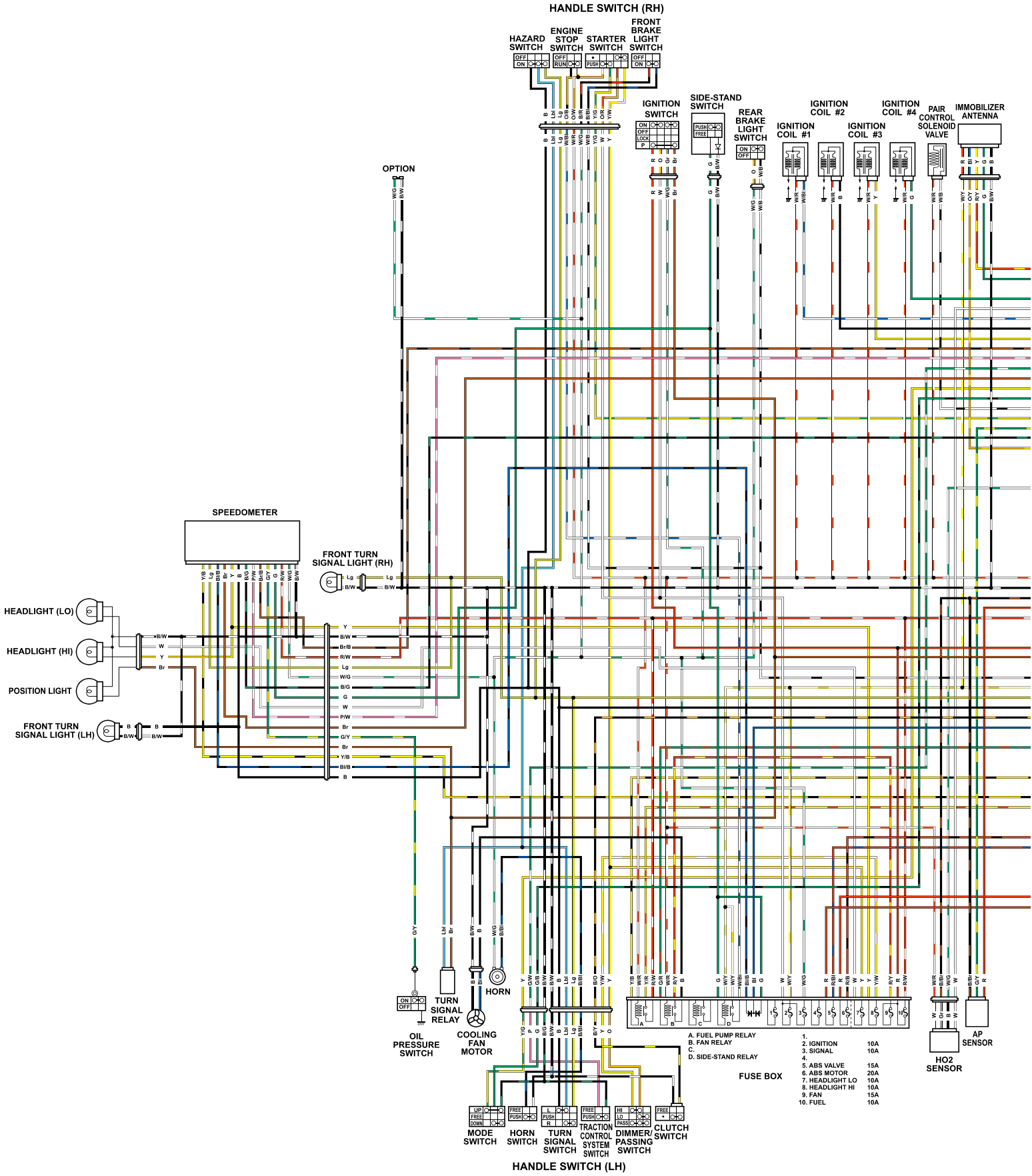
HANDLE SWITCH (RH)
HAZARD SWITCH
ENGINE STOP SWITCH
STARTER SWITCH
FRONT BRAKE LIGHT SWITCH
IGNITION SWITCH
SIDE-STAND SWITCH
REAR BRAKE LIGHT SWITCH
IGNITION COIL #1
IGNITION COIL #2
IGNITION COIL #3
IGNITION COIL #4
PAIR CONTROL SOLENOID VALVE
IMMOBILIZER ANTENNA
OPTION
SPEEDOMETER
FRONT TURN SIGNAL LIGHT (RH)
HEADLIGHT (LO)
HEADLIGHT (HI)
POSITION LIGHT
FRONT TURN SIGNAL LIGHT (LH)
OIL PRESSURE SWITCH
TURN SIGNAL RELAY
HORN
COOLING FAN MOTOR
A. FUEL PUMP RELAY
B. FAN RELAY
C.
D. SIDE-STAND RELAY
FUSE BOX
1.
2. IGNITION 10A
3. SIGNAL 10A
4.
5. ABS VALVE 15A
6. ABS MOTOR 20A
7. HEADLIGHT LO 10A
8. HEADLIGHT HI 10A
9. FAN 15A
10. FUEL 10A
HO2 SENSOR
AP SENSOR
MODE SWITCH
HORN SWITCH
TURN SIGNAL SWITCH
TRACTION CONTROL SYSTEM SWITCH
DIMMER/ PASSING SWITCH
CLUTCH SWITCH
HANDLE SWITCH (LH)

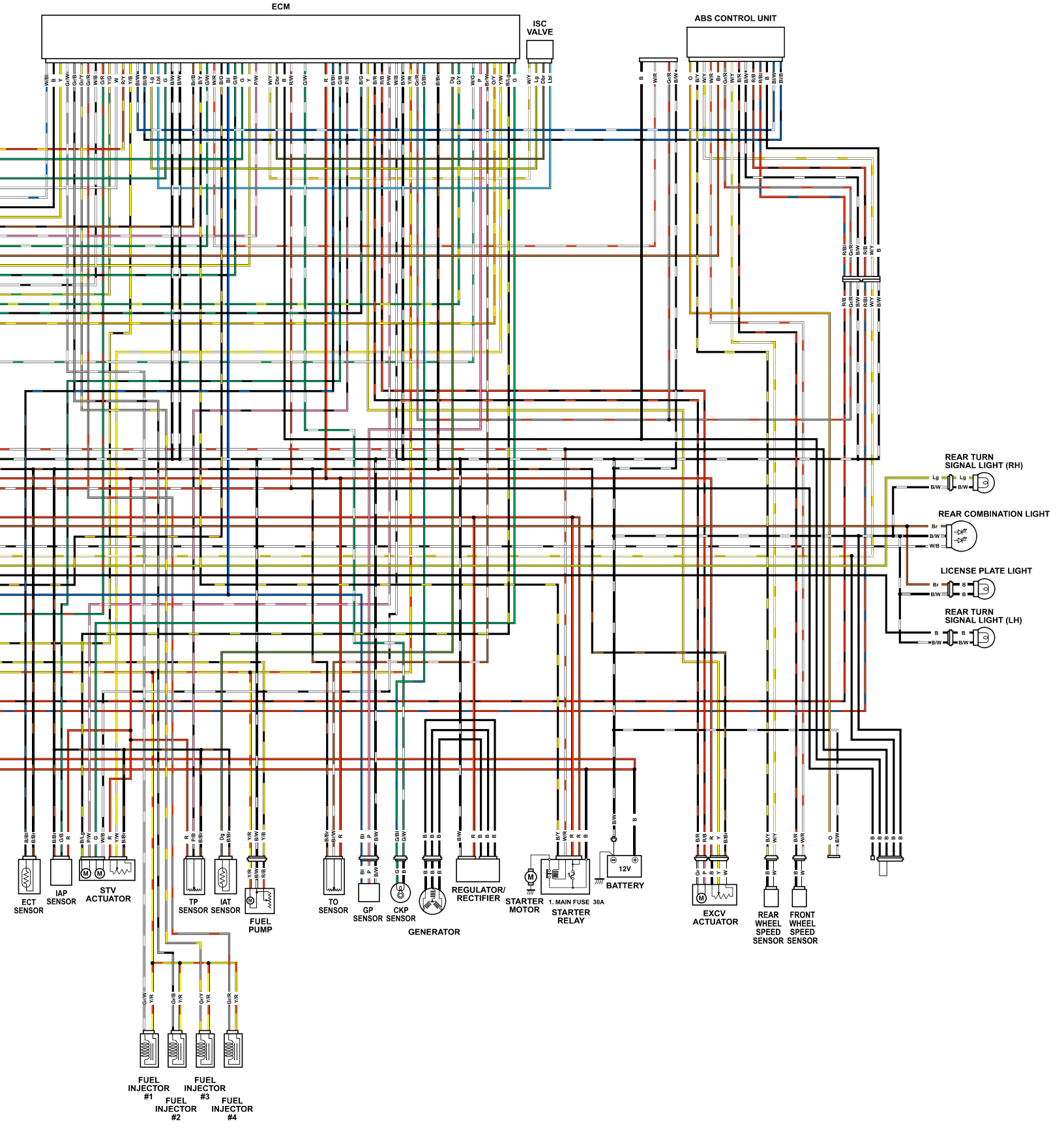
ECM
ISC VALVE
ABS CONTROL UNIT
REAR TURN SIGNAL LIGHT (RH)
REAR COMBINATION LIGHT
LICENSE PLATE LIGHT
REAR TURN SIGNAL LIGHT (LH)
ECT SENSOR
IAP SENSOR
STV ACTUATOR
TP SENSOR
IAT SENSOR
FUEL PUMP
TO SENSOR
GP SENSOR
CKP SENSOR
GENERATOR
REGULATOR/ RECTIFIER
STARTER MOTOR
1. MAIN FUSE 30A
STARTER RELAY
12V
BATTERY
EXCV ACTUATOR
REAR WHEEL SPEED SENSOR
FRONT WHEEL SPEED SENSOR
FUEL INJECTOR #1
FUEL INJECTOR #2
FUEL INJECTOR #3
FUEL INJECTOR #4

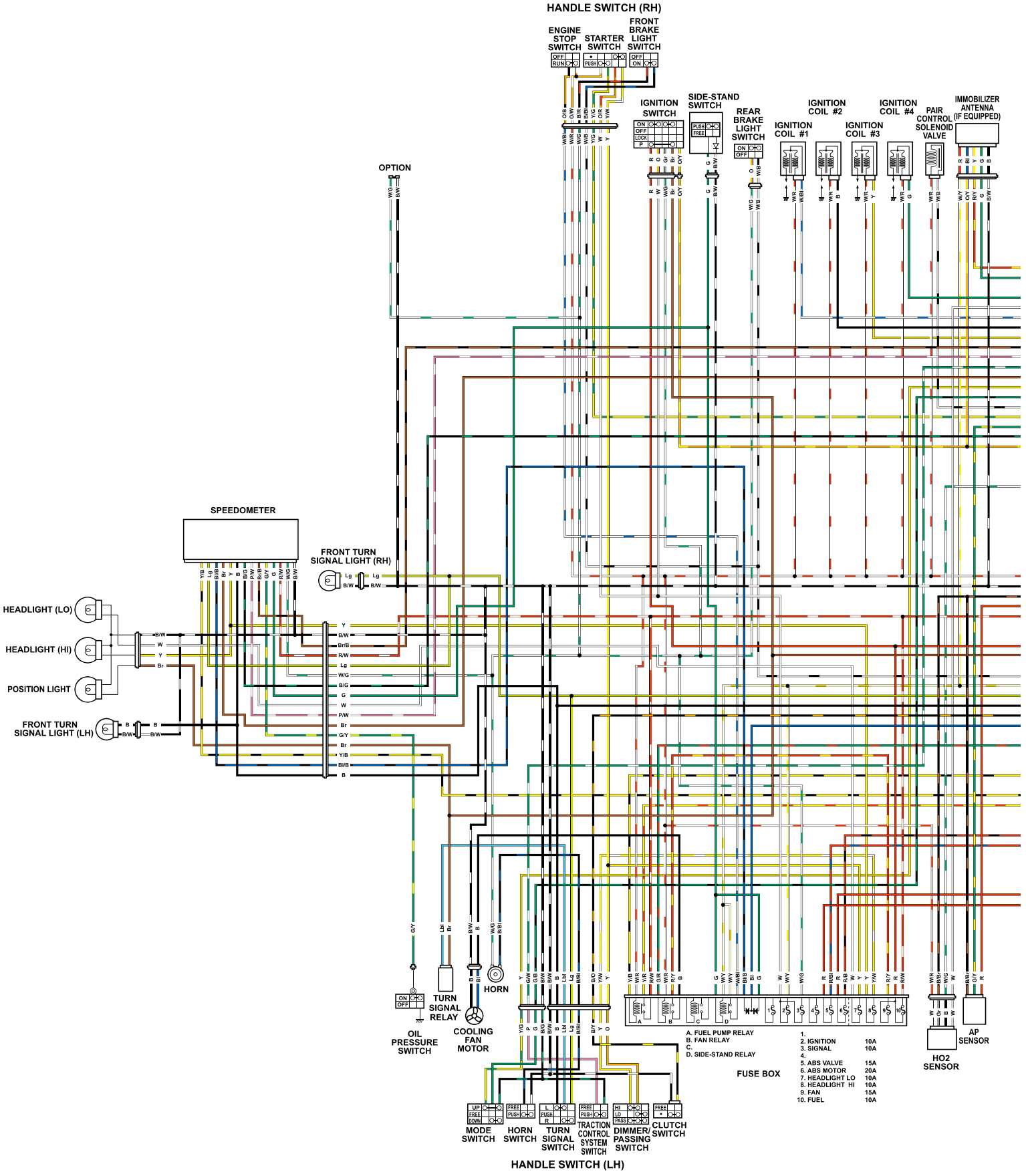
HANDLE SWITCH (RH)
ENGINE STOP SWITCH
STARTER SWITCH
FRONT BRAKE LIGHT SWITCH
IGNITION SWITCH
SIDE-STAND SWITCH
REAR BRAKE LIGHT SWITCH
IGNITION COIL #1
IGNITION COIL #2
IGNITION COIL #3
IGNITION COIL #4
PAIR CONTROL SOLENOID VALVE
IMMOBILIZER ANTENNA (IF EQUIPPED)
OPTION
SPEEDOMETER
FRONT TURN SIGNAL LIGHT (RH)
HEADLIGHT (LO)
HEADLIGHT (HI)
POSITION LIGHT
FRONT TURN SIGNAL LIGHT (LH)
HORN
TURN SIGNAL RELAY
OIL PRESSURE SWITCH
COOLING FAN MOTOR
A. FUEL PUMP RELAY
B. FAN RELAY
C.
D. SIDE-STAND RELAY
FUSE BOX
1.
2. IGNITION 10A
3. SIGNAL 10A
4.
5. ABS VALVE 15A
6. ABS MOTOR 20A
7. HEADLIGHT LO 10A
8. HEADLIGHT HI 10A
9. FAN 15A
10. FUEL 10A
AP SENSOR
HO2 SENSOR
MODE SWITCH
HORN SWITCH
TURN SIGNAL SWITCH
TRACTION CONTROL SYSTEM SWITCH
DIMMER/ PASSING SWITCH
CLUTCH SWITCH
HANDLE SWITCH (LH)

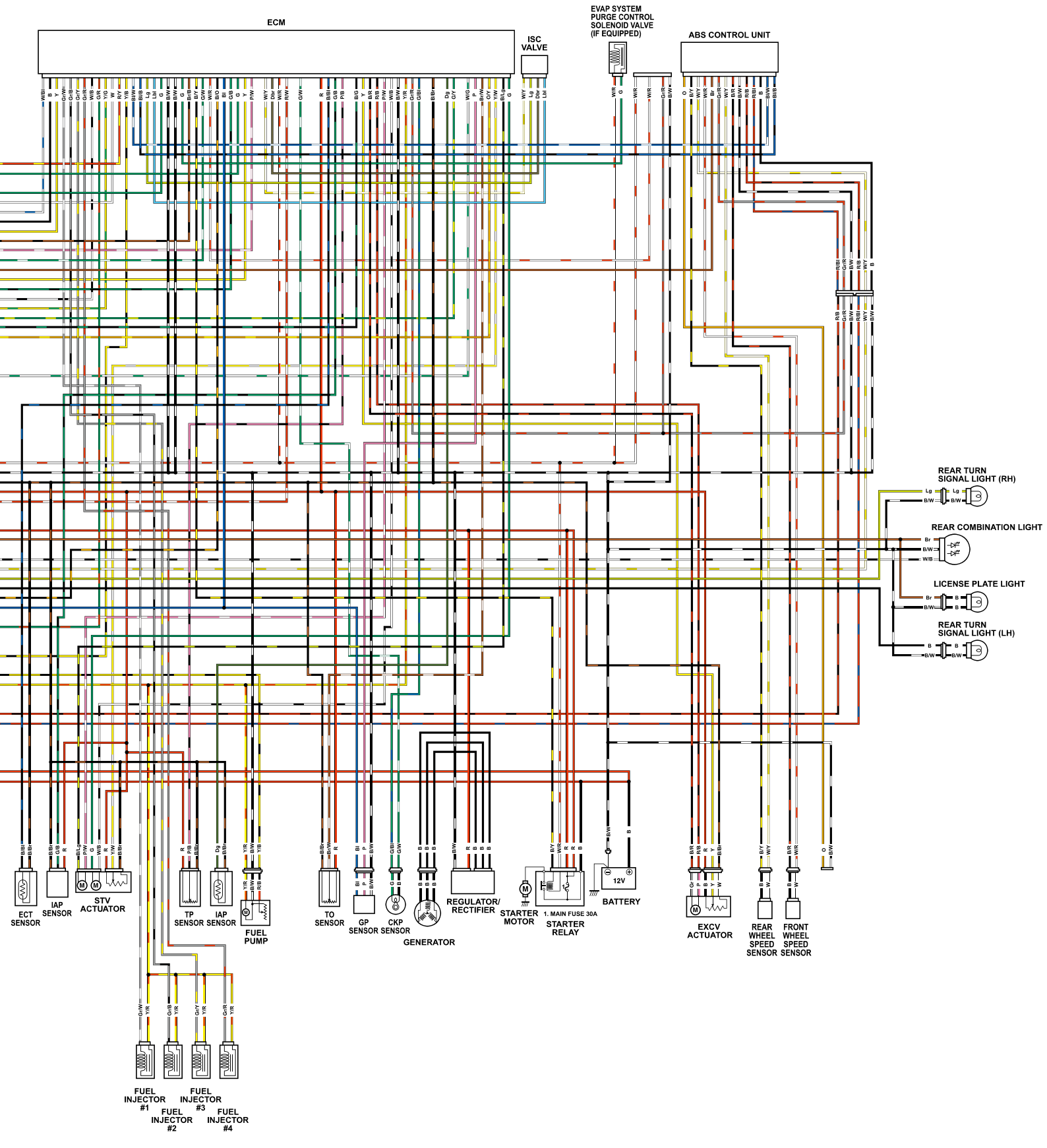
ECM
ISC VALVE
EVAP SYSTEM PURGE CONTROL SOLENOID VALVE (IF EQUIPPED)
ABS CONTROL UNIT
REAR TURN SIGNAL LIGHT (RH)
REAR COMBINATION LIGHT
LICENSE PLATE LIGHT
REAR TURN SIGNAL LIGHT (LH)
ECT SENSOR
IAP SENSOR
STV ACTUATOR
TP SENSOR
IAP SENSOR
FUEL PUMP
TO SENSOR
GP SENSOR
CKP SENSOR
GENERATOR
REGULATOR/ RECTIFIER
STARTER MOTOR
1. MAIN FUSE 30A
STARTER RELAY
12V
BATTERY
EXCV ACTUATOR
REAR WHEEL SPEED SENSOR
FRONT WHEEL SPEED SENSOR
FUEL INJECTOR #1
FUEL INJECTOR #2
FUEL INJECTOR #3
FUEL INJECTOR #4

GSX-S1000/A/F/FA

OWNER'S MANUAL



This manual should be considered a permanent part of the motorcycle and should remain with the motorcycle when resold or otherwise transferred to a new owner or operator. The manual contains important safety information and instructions which should be read carefully before operating the motorcycle.

IMPORTANT

BREAK-IN (RUNNING-IN) INFORMATION FOR YOUR MOTORCYCLE

The first 1600 km (1000 miles) are the most important in the life of your motorcycle. Proper break-in operation during this time will help ensure maximum life and performance from your new motorcycle. Suzuki parts are manufactured of high quality materials, and machined parts are finished to close tolerances. Proper break-in operation allows the machined surfaces to polish each other and mate smoothly.

Motorcycle reliability and performance depend on special care and restraint exercised during the break-in period. It is especially important that you avoid operating the engine in a manner which could expose the engine parts to excessive heat.

Please refer to the BREAK-IN (RUNNING-IN) section for specific break-in recommendations.

⚠ WARNING/⚠ CAUTION/ *NOTICE*/*NOTE*

Please read this manual and follow its instructions carefully. To emphasize special information, the symbol ⚠ and the words **WARNING**, **CAUTION**, ***NOTICE*** and *NOTE* have special meanings. Pay particular attention to messages highlighted by these signal words:

⚠ WARNING

Indicates a potential hazard that could result in death or serious injury.

⚠ CAUTION

Indicates a potential hazard that could result in minor or moderate injury.

NOTICE

Indicates a potential hazard that could result in vehicle or equipment damage.

NOTE: Indicates special information to make maintenance easier or instructions clearer.

FOREWORD

Motorcycling is one of the most exhilarating sports and to ensure your riding enjoyment, you should become thoroughly familiar with the information presented in this Owner's Manual before riding the motorcycle.

The proper care and maintenance that your motorcycle requires is outlined in this manual. By following these instructions explicitly you will ensure a long trouble free operating life for your motorcycle. Your authorized Suzuki dealer has experienced technicians that are trained to provide your machine with the best possible service with the right tools and equipment.

All information, illustrations and specifications contained in this manual are based on the latest product information available at the time of publication. Due to improvements or other changes, there may be some discrepancies between information in this manual and your motorcycle. Suzuki reserves the right to make changes at any time.

Please note that this manual applies to all specifications or all respective destinations and explains all equipment. Therefore, your model may have different standard features than shown in this manual.



SUZUKI MOTOR CORPORATION

TABLE OF CONTENTS

CONSUMER INFORMATION 1

CONTROLS 2

FUEL, ENGINE OIL AND COOLANT RECOMMENDATIONS 3

BREAK-IN (RUNNING-IN) AND INSPECTION BEFORE RIDING 4

RIDING TIPS 5

INSPECTION AND MAINTENANCE 6

TROUBLESHOOTING 7

STORAGE PROCEDURE AND MOTORCYCLE CLEANING 8

SPECIFICATIONS

INDEX

CONSUMER INFORMATION

ACCESSORY USE AND MOTORCYCLE LOADING 1-2
SAFE RIDING RECOMMENDATION FOR MOTORCYCLE RIDERS 1-4
LABELS 1-5
SERIAL NUMBER LOCATION 1-6
NOISE CONTROL SYSTEM (AUSTRALIA ONLY) 1-6

ACCESSORY USE AND MOTORCYCLE LOADING

ACCESSORY USE

The addition of unsuitable accessories can lead to unsafe operating conditions. It is not possible for Suzuki to test each accessory on the market or combinations of all the available accessories; however, your dealer can assist you in selecting quality accessories and installing them correctly. Use extreme caution when selecting and installing the accessories on your motorcycle and consult your Suzuki dealer if you have any questions.

⚠ WARNING

Improper installation of accessories or modification of the motorcycle may cause changes in handling which could lead to an accident.

Never use improper accessories, and make sure that any accessories that are used are properly installed. All parts and accessories added to the motorcycle should be genuine Suzuki parts or their equivalent designed for use on this motorcycle. Install and use them according to their instructions. If you have any questions, contact your Suzuki dealer.

ACCESSORY INSTALLATION GUIDELINES

- Install aerodynamic-affecting accessories, such as a fairing, windshield, backrests, saddlebags, and travel trunks, as low as possible, as close to the motorcycle and as near the center of gravity as is feasible. Check that the mounting brackets and other attachment hardware are rigidly mounted.
- Inspect for proper ground clearance and bank angle. Inspect that the accessory does not interfere with the operation of the suspension, steering or other control operations.
- Accessories fitted to the handlebars or the front fork area can create serious stability problems. The extra weight will cause the motorcycle to be less responsive to your steering control. The weight may also cause oscillations in the front end and lead to instability problems. Accessories added to the handlebars or front fork of the machine should be as light as possible and kept to a minimum.
- Certain accessories displace the rider from his or her normal riding position. This limits the freedom of movement of the rider and may limit his or her control ability.
- Additional electrical accessories may overload the existing electrical system. Severe overloads may damage the wiring harness or create a dangerous situation due to the loss of electrical power during the operation of the motorcycle.
- Do not pull a trailer or sidecar. This motorcycle is not designed to pull a trailer or sidecar.

LOADING LIMIT

⚠ WARNING

Overloading or improper loading can cause loss of motorcycle control and an accident.

Follow loading limits and loading guidelines in this manual.

Never exceed the G.V.W. (Gross Vehicle Weight) of this motorcycle. The G.V.W. is the combined weight of the machine, accessories, payload, rider and passenger. When selecting your accessories, keep in mind the weight of the rider as well as the weight of the accessories. The additional weight of the accessories may not only create an unsafe riding condition but may also affect the riding stability.

G.V.W.: 400 kg (880 lbs)
at the tire pressure (cold)
Front: 250 kPa (2.50 kgf/cm^2, 36 psi)
Rear: 290 kPa (2.90 kgf/cm^2, 42 psi)

LOADING GUIDELINES

This motorcycle is primarily intended to carry small items when you are not riding with a passenger. Follow the loading guidelines below:

- Balance the load between the left and right side of the motorcycle and fasten it securely.
- Keep cargo weight low and as close to the center of the motorcycle as possible.
- Do not attach large or heavy items to the handlebars, front forks or rear fender.
- Do not install a luggage carrier or a luggage box protruding over the tail end of the motorcycle.
- Do not carry any items that protrude over the tail end of the motorcycle.
- Check that both tires are properly inflated to the specified tire pressure for your loading conditions. Refer to page 6-43.
- Improperly loading your motorcycle can reduce your ability to balance and steer the motorcycle. You should ride at reduced speeds, less than 130 km/h (80 mph), when you are carrying cargo or have added accessories.
- Adjust suspension setting as necessary.

⚠ WARNING

Placing objects in the space behind the fairing can interfere with steering and can cause loss of control.

Do not carry any objects in the space behind the fairing.

MODIFICATION
Modification of the motorcycle, or removal of original equipment may render the vehicle unsafe or illegal.

The frame of this motorcycle is made of an aluminium alloy. Therefore, never make any modifications such as drilling or welding to the frame as it weakens the strength of the frame significantly. Failure to heed this warning could result in an unsafe vehicle operating condition and subsequent accident. Suzuki will not be responsible in any way for personal injury or damage to the motorcycle caused by frame modifications. Bolt on accessories that do not modify the frame in any way may be installed provided that the GVW is not exceeded.

⚠ WARNING

Modification to an aluminum alloy frame, such as drilling or welding, weakens the frame. This could result in an unsafe operating condition and may lead to an accident.

Never make any modifications to the frame.

SAFE RIDING RECOMMENDATION FOR MOTORCYCLE RIDERS

Motorcycle riding is great fun and an exciting sport. Motorcycle riding also requires that some extra precautions be taken to ensure the safety of the rider and passenger. These precautions are:

WEAR A HELMET
Motorcycle safety equipment starts with a quality helmet. One of the most serious injuries that can happen is a head injury. ALWAYS wear a properly approved helmet. You should also wear suitable eye protection.

RIDING APPAREL
Loose, fancy clothing can be uncomfortable and unsafe when riding your motorcycle. Choose good quality motorcycle riding apparel when riding your motorcycle.

INSPECTION BEFORE RIDING
Review thoroughly the instructions in the “INSPECTION BEFORE RIDING” section of this manual. Do not forget to perform an entire safety inspection to ensure the safety of the rider and its passenger.

FAMILIARIZE YOURSELF WITH THE MOTORCYCLE
Your riding skill and your mechanical knowledge form the foundation for safe riding practices. We suggest that you practice riding your motorcycle in a non-traffic situation until you are thoroughly familiar with your machine and its controls. Remember practice makes perfect.

KNOW YOUR LIMITS

Ride within the boundaries of your own skill at all times. Knowing these limits and staying within them will help you to avoid accidents.

BE EXTRA SAFETY CONSCIOUS ON BAD WEATHER DAYS

Riding on bad weather days, especially wet ones, requires extra caution. Braking distances double on a rainy day. Stay off the painted surface marks, manhole covers and greasy appearing areas as they can be especially slippery. Use extreme caution at railway crossings and on metal gratings and bridges. Whenever in doubt about road condition, slow down!

RIDE DEFENSIVELY

The most common type of motorcycle accident occurs when a car traveling towards a motorcycle turns round corner in front of the motorcyclist. Ride defensively. Wise motorcyclist uses a strategy of assuming they are invisible to other drivers, even in broad daylight. Wear bright, reflecting clothing. Turn on the headlight and taillight every time even on a bright, sunny day to attract driver's attention. Do not ride in another driver's blind spot.

LABELS

Read and follow all the labels on the motorcycle. Make sure you understand all of the labels. Do not remove any labels from the motorcycle.

SERIAL NUMBER LOCATION

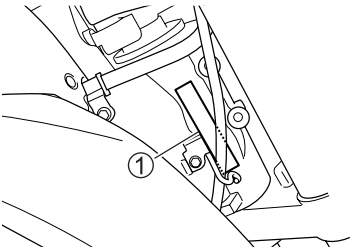

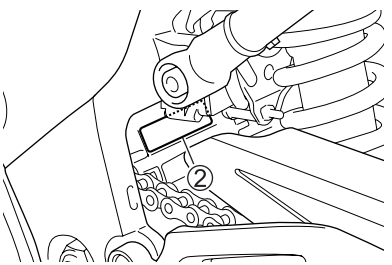

The frame and/or engine serial numbers are used to register the motorcycle. They are also used to assist your dealer when ordering parts or referring to special service information. The frame number ① is stamped on the steering head tube. The engine serial number ② is stamped on the crankcase assembly.

Please write down the numbers in the box provided below for your future reference.

Frame number:

Engine number:

NOISE CONTROL SYSTEM (AUSTRALIA ONLY)

TAMPERING WITH NOISE CONTROL SYSTEM PROHIBITED

Owners are warned that the law may prohibit:

(a) The removal or rendering inoperative by any person other than for purposes of maintenance, repair or replacement, of any device or element of design incorporated into any new vehicle for the purpose of noise control prior to its sale or delivery to the ultimate purchaser or while it is in use; and

(b) The use of the vehicle after such device or element of design has been removed or rendered inoperative by any person.

CONTROLS

LOCATION OF PARTS 2-2
KEY 2-5
IGNITION SWITCH 2-7
INSTRUMENT PANEL 2-10
LEFT HANDLEBAR 2-24
RIGHT HANDLEBAR 2-29
FUEL TANK CAP 2-32
GEARSHIFT LEVER 2-33
REAR BRAKE PEDAL 2-33
SEAT LOCK AND HELMET HOLDERS 2-34
LUGGAGE STRAPS 2-36
SIDE STAND 2-37
SUSPENSION ADJUSTMENT 2-38

LOCATION OF PARTS

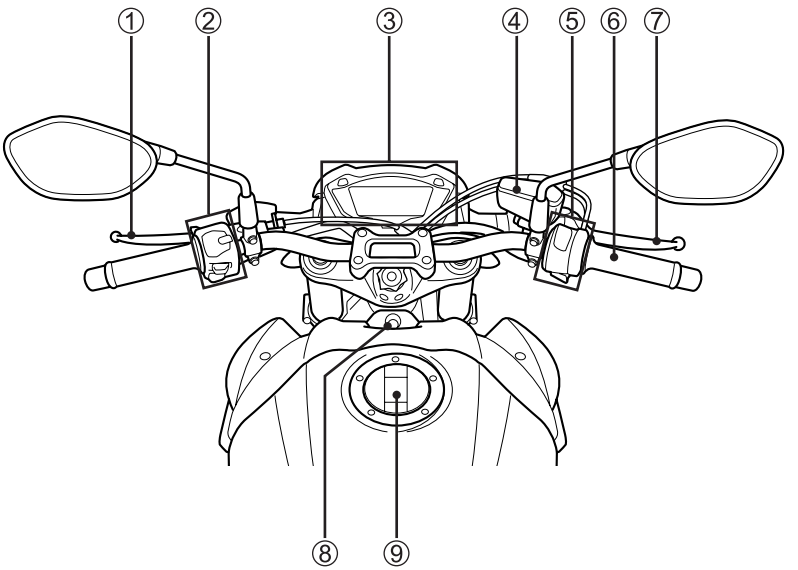

GSX-S1000/A

① Clutch lever
② Left handlebar switches
③ Instrument panel
④ Front brake fluid reservoir
⑤ Right handlebar switches
⑥ Throttle grip
⑦ Front brake lever
⑧ Ignition switch
⑨ Fuel tank cap

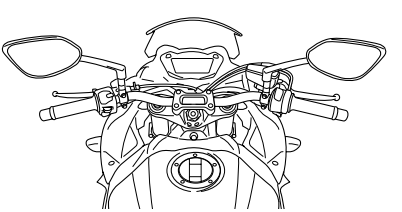

GSX-S1000F/FA

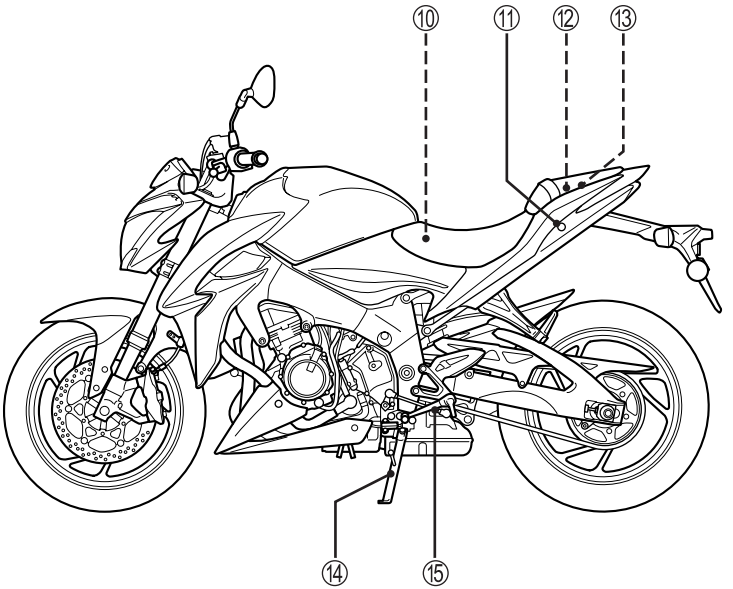

GSX-S1000/A

⑩ Battery
⑪ Seat lock
⑫ Tools
⑬ Helmet holders
⑭ Side stand
⑮ Gearshift lever

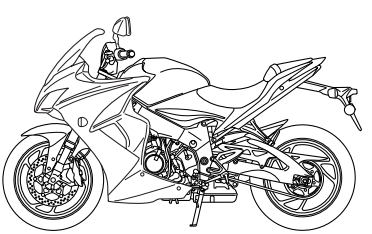

GSX-S1000F/FA

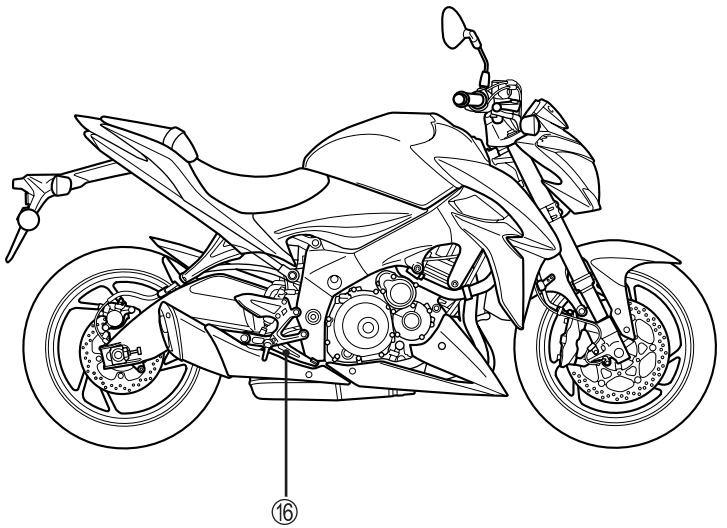

GSX-S1000/A

⑯ Rear brake pedal

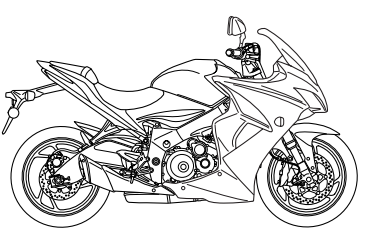

GSX-S1000F/FA

KEY

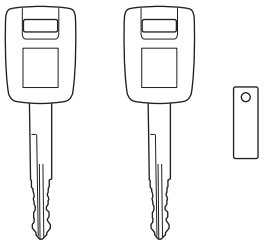

This motorcycle comes equipped with a pair of identical ignition keys. Keep the spare key in a safe place.

If the all keys are lost, the ECM should be replaced. (Immobilizer equipped model)

⚠ WARNING

A long key chain could get caught between the ignition switch and upper bracket. This could interfere with steering and cause loss of control.

Use the ignition key without key chains or other keys attached.

NOTICE

Attaching key holder or some chain to the ignition key can damage plated parts and painted parts around the ignition switch.

Use only the ignition key or a soft key holder to avoid plating and painting damage.

NOTE:

- *Immobilizer identification code is programmed into the key. Therefore, a key made by an ordinary locksmith will not work. Ask your Suzuki dealer if you need to make a spare key.*
- *If you loose the key, ask your Suzuki dealer to have the lost one deactivated.*
- *If you own other vehicles with immobilizer keys, keep those keys away from the ignition switch when using your motorcycle, or they may interfere with your motorcycle immobilizer system. The spare key for your motorcycle also may interfere with your motorcycle immobilizer system. Keep the spare key away from the ignition switch.*
- *Two keys are originally registered to the immobilizer system. It is possible to add two more keys. Ask your Suzuki dealer to make and register additional spare keys.*

IMMOBILIZER INDICATOR (if equipped)

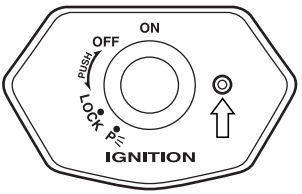

The immobilizer indicator blinks 2 times when the ignition switch is turned on. Then indicator comes on 2 seconds and goes off.

Immobilizer system is designed to help prevent motorcycle theft by electronically disabling the engine starting system. The engine can be started only with your original keys which have an electronic identification code programmed into it. The key communicates the identification code to the ECM when the key is turned to “ON” position.

NOTE:

- *It is impossible to start the engine when the indicator remains blinking.*
- *If the indicator remains blinking, it means immobilizer system communication error between key and ECM or use of wrong key. Turn off the ignition switch and then turn on to communicate immobilizer system properly.*
- *Two ignition keys are originally registered to the immobilizer system. It is possible to add two more keys. The indicator blinks numbers of registered key when the ignition switch is turned on.*

IGNITION SWITCH

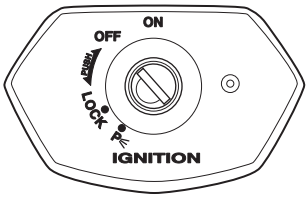

Immobilizer equipped model

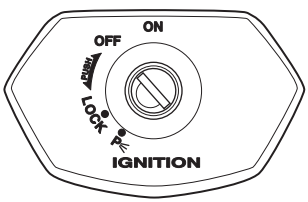

The ignition switch has 4 positions:

"OFF" POSITION
All electrical circuits are cut off. The engine will not start. The key can be removed.

"ON" POSITION
The ignition circuit is completed and the engine can now be started. The headlight and taillight will automatically be turned on when the key is in this position. The key cannot be removed from the ignition switch in this position.

NOTE: Start the engine promptly after turning the key to the "ON" position, or the battery will lose power due to consumption by the headlight and taillight.

"LOCK" POSITION
To lock the steering, turn the handlebar all the way to the left. Push down and turn the key to the "LOCK" position and remove the key. All electrical circuits are cut off.

"P" (Parking) POSITION

When parking the motorcycle, lock the steering and turn the key to the "P" position. The key can now be removed and the position light and taillight will remain lit and the steering will be locked. This position is for night time roadside parking to increase visibility.

⚠ WARNING

Turning the ignition switch to the "P" (PARKING) or "LOCK" position while the motorcycle is moving can be hazardous. Moving the motorcycle while the steering is locked can be hazardous. You could lose your balance and fall, or you could drop the motorcycle.

Stop the motorcycle and place it on the side stand before locking the steering. Never attempt to move the motorcycle when the steering is locked.

⚠ WARNING

If the motorcycle falls down due to a slip or collision, unexpected damage to the motorcycle could cause the engine to keep running, which could result in a fire, or could result in injury from moving parts such as the rear wheel.

If the motorcycle falls down, turn the ignition switch off immediately. Ask your authorized Suzuki dealer to inspect the motorcycle for unseen damage.

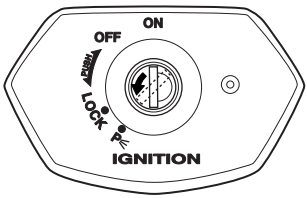

The key hole can be covered by turning the lid.

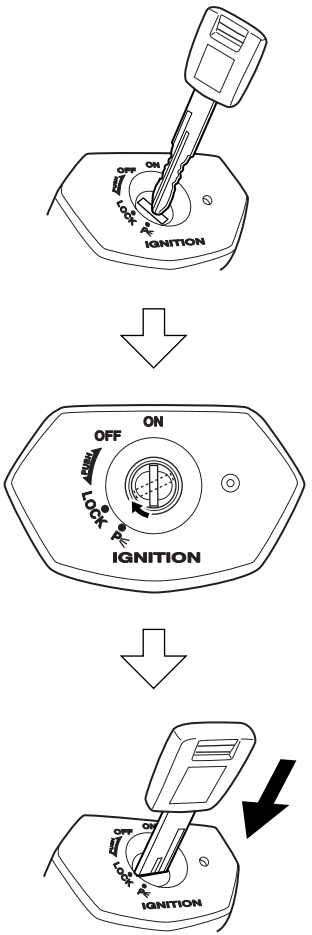

Align the lid hole position to the key hole position when inserting the key.

INSTRUMENT PANEL

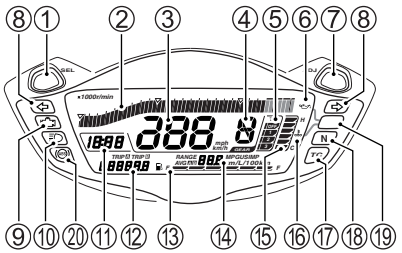

The malfunction indicator light ⑨, traction control system indicator light ⑰, coolant temperature indicator/oil pressure indicator light ⑲, ABS indicator light ⑳ (GSX-S1000A/FA), and LCD's work as follows to confirm their function when the ignition switch is turned to the "ON" position.

- The malfunction indicator light ⑨ comes on for 3 seconds.
- All LCD segments appear and then show the normal display.



When the ignition switch is turned on, all the LCD segments are displayed. At this time, if only km (km/h) is displayed on the LCD, switching to the mile (mph) indication is not available as the meter is of the km specification.

TACHOMETER ②

The tachometer indicates the engine speed in revolutions per minute (r/min).

Press and hold the SEL button ① and turn on the ignition switch. Hold the SEL button ① for 4 seconds to switch tachometer display pattern setting mode.

To change the display pattern, push the SEL button ①. The display pattern changes in the order below.

Normal → Negative/Positive reverse image → 1 segment → 2 segment → Peak hold → Normal

Push the ADJ button ⑦ and returns to the normal display.

SPEEDOMETER ③
The speedometer indicates the road speed in kilometers per hour or miles per hour.

NOTE:
- *Press and hold the ADJ button ⑦ and turn on the ignition switch. Hold the ADJ button ⑦ for 4 seconds to switch between km/h and mph. At the same time, the odometer will be changed between km and mile.*
- *Select km/h or mph, as appropriate, to comply with traffic regulations.*
- *Check km/h and mph display after adjusting the instrument panel display.*

GEAR POSITION INDICATOR ④
The gear position indicator indicates gear position. This indicator displays "N" when the transmission is in neutral.

NOTE: When the display indicates "CHEC" in the odometer display area, the gear position indicator does not indicate a number but indicates "–".

TRACTION CONTROL SYSTEM DISPLAY ⑤
The setting of the traction control system is indicated by OFF, 1, 2 or 3.

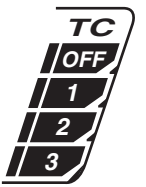

NOTE: For more detailed information on the traction control system, see page 2-26.

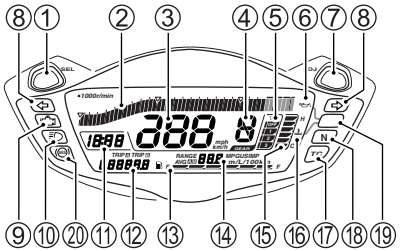

OIL PRESSURE INDICATOR "" ⑥

When the ignition switch is in the "ON" position but the engine has not been started, the symbol "" ⑥ in the display and the indicator light ⑲ comes on. As soon as the engine is started, the symbol "" ⑥ and the indicator light should go out.

When the engine oil pressure drops under the normal operating range, the symbol "" ⑥ in the display appears and the indicator light ⑲ comes on.

NOTICE

Riding the motorcycle with the oil pressure indicator light lit can damage the engine and transmission.

If the oil pressure indicator light comes on, indicating low oil pressure, stop the engine immediately. Check the oil level and add oil if necessary. If there is a proper amount of oil and the light still does not go out, have your authorized Suzuki dealer or a qualified mechanic inspect your motorcycle.

TURN SIGNAL INDICATOR LIGHT "" ⑧

When the turn signals are being operated either to the right or to the left, the indicator light will blink intermittently.

NOTE: If a turn signal light is not operating properly due to bulb filament or circuit failure, the indicator light blinks more quickly to notify the rider of the existence of a problem.

MALFUNCTION INDICATOR LIGHT "⚙" ⑨



If the fuel injection system fails, the malfunction indicator light ⑨ comes on and the display indicates "FI" in the odometer display area in the following two modes;

A. The display ⑫ in the odometer display area alternately indicates "FI" and the odometer/trip meter reading, and the malfunction indicator light ⑨ comes on and remains lit.

B. The display ⑫ in the odometer display area indicates "FI" continuously and the malfunction indicator light ⑨ blinks while cranking the engine.

The engine may continue to run in mode A, but the engine will not run in mode B.

NOTICE

The malfunction indicator light comes on to indicate a problem with the fuel injection system. Riding the motorcycle with the malfunction indicator lit can damage the engine and transmission.

If the display indicates "FI" and the malfunction indicator light comes on, have your authorized Suzuki dealer or a qualified mechanic inspect the fuel injection system as soon as possible.

NOTE:

- *If the display indicates "FI" and the odometer/trip meter reading alternately, and the malfunction indicator light comes on and remains lit, keep the engine running and bring your motorcycle to an authorized Suzuki dealer. If the engine stalls, try restarting the engine after turning the ignition switch off and on.*
- *If the display indicates "FI" continuously and the malfunction indicator light blinks, the engine will not start.*

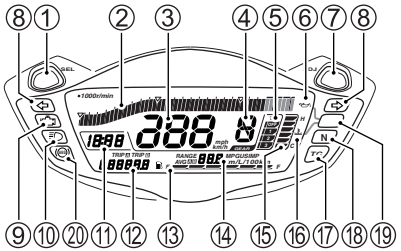



When the display indicates “CHEC” in the odometer display area, check the following items;

- Make sure that the engine stop switch is in the “” position.
- Make sure that the transmission is in neutral or the side stand is fully up.

If the display still indicates “CHEC” after checking the above items, inspect the ignition fuse and the connection of the lead wire couplers.

HIGH BEAM INDICATOR LIGHT “” ⑩

This blue indicator light will be lit when the headlight high beam is turned on.

CLOCK ⑪



Time is shown when the ignition switch is in the “ON” position. The clock has a 12-hour display. Follow the procedure below to adjust the clock.

To adjust the clock, press and hold the SEL button ① and the ADJ button ⑦ simultaneously for 2 seconds until the clock hour display blinks.
Push the ADJ button ⑦ to adjust the hour display.
Push the SEL button ① and the clock minute display blinks. Push the ADJ button ⑦ to adjust the minute display.
Push the SEL button ① to return to the clock mode.

NOTE:

- *When the ADJ button ⑦ is pressed and held, the display will increase continuously.*
- *The clock can be adjusted when the ignition switch is in the “ON” position.*
- *This clock is powered by the battery of the motorcycle. If your motorcycle is to be left unused more than two months, remove the battery from the motorcycle.*

ODOMETER/TRIP METER/ INSTRUMENT PANEL LIGHT BRIGHTNESS ⑫

The display has 4 functions; odometer, two trip meters, and instrument panel light brightness. When the ignition switch is turned to the "ON" position, the test pattern shown below is displayed for 2 seconds. After the test pattern is displayed, the display will show the function that was displayed the last time that the ignition switch was turned off.



NOTE:

- *Press and hold the ADJ button ⑦ and turn on the ignition switch. Hold the ADJ button ⑦ for 4 seconds to switch between km and mile. At this time, the speedometer will be changed between km/h and mph and the instantaneous/ average fuel economy meter will be changed between km/L (L/100 km) and MPG.*
- *Select km or mile, as appropriate, to comply with traffic regulations.*
- *Check the km and mile display after adjusting the instrument panel display.*

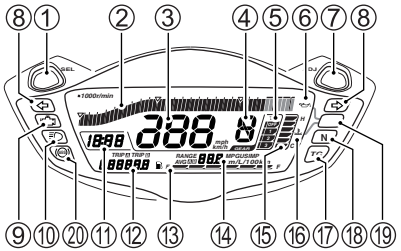

To change the display, push the SEL button ① or left handlebar MODE switch (Up). The display changes in the order below.

NOTE: When the traction control system select switch is pushed, the display cannot be changed with the left handlebar MODE switch because traction control select mode is active.

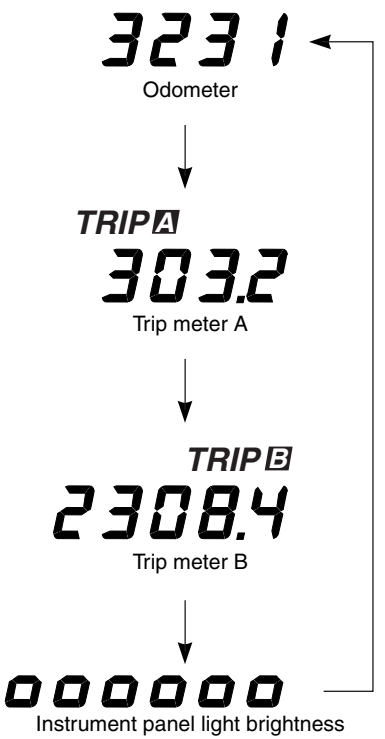

ODOMETER

The odometer registers the total distance that the motorcycle has been ridden. The odometer ranges from 0 to 999999.

The odometer display locks at 999999 when the total distance exceeds 999999.

TRIP METERS

The two trip meters are resettable odometers. They can register two kinds of distances at the same time. For instance, trip meter A can register the trip distance and trip meter B can register the distance between fuel stops.

To reset a meter to zero, press and hold the ADJ button ⑦ or MODE switch (Up) for 2 seconds while the display indicates the trip meter A or B, you want to reset. When you reset the trip meter A or B, the fuel economy meter will also be reset.

NOTE: When the trip meter exceeds 9999.9, the trip meter will return to 0.0 and start counting again.

INSTRUMENT PANEL LIGHT BRIGHTNESS

Set the meter to instrument panel light brightness, then press and hold the ADJ button ⑦ or MODE switch (Up) for 2 seconds until the "0" mark indicators blink. Pushing the SEL button ① or MODE switch (Up) will change the instrument panel light brightness in 6 steps. The brightness indicator indicates brightness from "0" (min) to "000000" (max). Push the ADJ button ⑦ or MODE switch (Down) to return to instrument panel light brightness mode.

NOTE: If the traction control system select switch is pressed (selection of traction mode) during instrument panel light brightness adjustment (while blinking), the instrument panel light brightness cannot be adjusted or confirmed with the handlebar MODE switch. In this case, use the SEL/ADJ button to adjust/confirm the instrument panel light brightness or press the traction control system select switch again (cancellation of traction mode selection) so that the instrument panel light brightness can be adjusted and confirmed with the handlebar MODE switch.

⚠ WARNING

Changing the display while riding can be hazardous. Removing a hand from the handlebars can reduce your ability to control the motorcycle.

Never change the display while riding. Keep both hands on the handlebars.

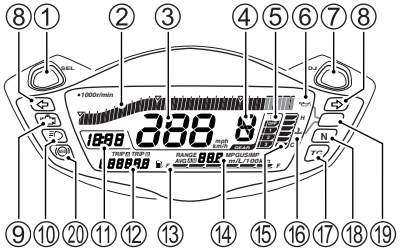

FUEL METER "⛽" ⑬

The fuel meter indicates the amount of fuel remaining in the fuel tank. The fuel meter displays all 6 segments when the fuel tank is full. The mark blinks when the fuel level drops below 4.2 L (4.4/3.7 US/Imp qt). The mark and segment blink when the fuel drops below 1.7 L (1.8/1.5 US/Imp qt).

Fuel tank	Approximately 1.7 L	Approximately 4.2 L	Full
Fuel gauge	Blink		
⛽ mark	Blink	Blink	

NOTE:

- *The fuel meter will not indicate correctly when the motorcycle is placed on the side stand. Turn the ignition switch to the "ON" position when the motorcycle is held upright.*
- *If the fuel mark blinks, fill the fuel tank immediately. Also, the last segment of the fuel meter blinks when the fuel tank is almost empty.*

DRIVING RANGE METER/ INSTANTANEOUS FUEL ECONOMY METER/AVERAGE FUEL ECONOMY METER ⑭

The display has 3 functions; driving range meter, instantaneous fuel economy meter and average fuel economy meter. When the ignition switch is turned to the "ON" position, the test pattern shown below is displayed for 3 seconds.



After the test pattern is displayed, the display will show the function that was displayed the last time that the ignition switch was turned off.

To change the display, push the ADJ button ⑦ or left handlebar MODE switch (Down). The display changes in the order below.

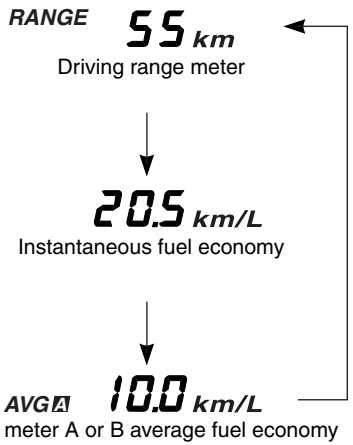

Driving range meter

The driving range meter displays estimated driving range (distance) based on the remaining fuel within the range from 1 to 999 km (mile). The driving range is recalculated when you refuel, but the indication may not change when only a small amount of fuel is added.

The driving range will not be recalculated when the motorcycle is placed on the side stand. Check the estimated driving range (distance) when the side stand is retracted. When the battery is disconnected, the driving range meter will be reset. When this happens, the meter indicates "– – –" until the motorcycle is ridden for a certain distance.

NOTE:

- *The driving range (distance) is an estimated value. The indication may not be the same as the actual driving distance.*
- *The meter does not use the average fuel economy value to calculate driving range (distance) and the calculation result may not be the same as indicated by the average fuel economy meter.*
- *To avoid running out of gasoline, you should not continue to ride the motorcycle until the estimated driving range drops to 1.*

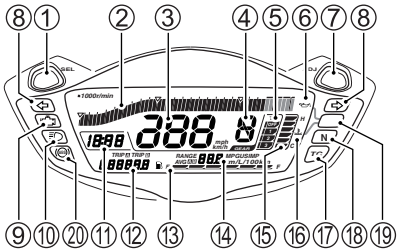

Instantaneous Fuel Economy Meter and Average Fuel Economy Meter

To change between "km/L (L/100 km)" and "MPG", press and hold the ADJ button ⑦ and turn on the ignition switch. Hold the ADJ button ⑦ for 4 seconds to switch between km and mile. At the same time, the odometer will be changed between km and mile.

To change between "km/L" and "L/100 km", set the meter ⑭ to either instantaneous fuel economy meter or average fuel economy meter and hold the SEL button ① or MODE switch (Down) for 2 seconds.

Instantaneous fuel economy meter

The instantaneous fuel economy meter displays the fuel consumption value only when the motorcycle is moving. However, when the motorcycle is stopping, the fuel economy meter displays "– – . –". This meter ranges from 0.1 to 50.0 (km/L), from 2.0 to 50.0 (L/100 km), or from 0.1 to 99.9 (MPG IMP).

NOTE: The display shows estimated values. Indications may not be the same as actual values.

Average fuel economy meter

The average fuel economy meter displays average fuel economy ratio of trip A or trip B. The average fuel economy meter ranges from 0.1 to 50.0 (km/L), from 0.1 to 99.9 (MPG IMP) or from 2.0 to 50.0 (L/100 km). The average fuel economy meter indicates "– – . –" when the trip meter indicates 0.0. To reset the fuel economy meter, reset the trip meter.

NOTE: The display shows estimated values. Indications may not be the same as actual values.

COOLANT TEMPERATURE METER "" ⑮

The coolant temperature is displayed by an LCD segment temperature indicator ⑮, water temperature mark ⑯, and indicator light ⑲.

When the coolant temperature exceeds 116°C (241°F), all six LCD segments turn on. When the coolant temperature comes to 120°C (248°F), the water temperature mark ⑯ blinks, and the indicator light ⑲ turns on. If all six LCD segments for the temperature indication ⑮ turn on, stop the engine, wait until the engine is cooled, and check the coolant level.

NOTICE

Riding the motorcycle with the coolant temperature indicator lit can cause serious engine damage due to overheating.

If the engine coolant temperature indicator light comes on, stop the engine to let it cool. Do not run the engine until the coolant temperature indicator light goes off.

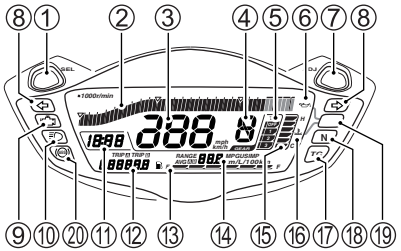

TRACTION CONTROL SYSTEM INDICATOR LIGHT "TC" ⑰

When the traction control system is turned off, the traction control system indicator light remains lit.

When the traction control system is set to Mode 1, Mode 2 or Mode 3, the traction control system indicator light indicates as follows.

- The indicator comes on when the ignition switch is turned "ON" and goes off after the motorcycle speed exceeds 5 km/h (3 mph).
- The indicator comes on and remains on when the traction control system is not working due to a system malfunction.
- The indicator blinks when the traction control system senses rear wheel spin and is controlling engine power output.
- The indicator remains off when the traction control system is monitoring the traction of the rear wheel during acceleration.

⚠ WARNING

Riding the motorcycle with the traction control system turned on and the traction system indicator light lit can be hazardous.

If the traction control system indicator light comes on while riding, stop the motorcycle in a safe place and turn off the ignition switch. Turn the ignition switch "ON" after a while and check whether the indicator light comes on.

- **If the indicator light goes off after starting to ride, the traction control system will be functioning.**
- **If it does not go off after starting to ride, the traction control system is not functioning. You should have the system checked by an authorized Suzuki dealer as soon as possible.**

NOTE: For more detailed information on the traction control system, see page 2-26.

NEUTRAL INDICATOR LIGHT "N" ⑱

The green light will come on when the transmission is in neutral. The light will go out when you shift into any gear other than neutral.

ABS INDICATOR LIGHT "(ABS)" ⑳ (GSX-S1000A/FA)

This indicator normally comes on when the ignition switch is turned "ON" and goes off after the motorcycle speed exceeds 5 km/h (3 mph).

If there is a problem with the ABS (Anti-lock Brake System), this indicator light blinks or comes on. The ABS does not operate when the ABS indicator light is on or blinking.

NOTE: If the ABS indicator light goes off before starting the motorcycle, check the ABS indicator light function by turning off and on the ignition switch. The ABS indicator light can go off if the engine is revved at high speed before starting the motorcycle. If the ABS indicator light does not come on when the ignition switch is turned on, you should have the system checked by an authorized Suzuki dealer as soon as possible.

⚠ WARNING

Riding the motorcycle with the ABS indicator light on can be hazardous.

If the ABS indicator light blinks or comes on while riding, stop the motorcycle in a safe place and turn off the ignition switch. Turn the ignition switch "ON" after a while and check if the indicator light comes on.

- **If the indicator light goes off after starting to ride, the ABS will be functioning.**
- **If it does not go off after starting to ride, ABS is not functioning, and the brakes provide normal stopping ability. You should have the system checked by an authorized Suzuki dealer as soon as possible.**

LEFT HANDLEBAR

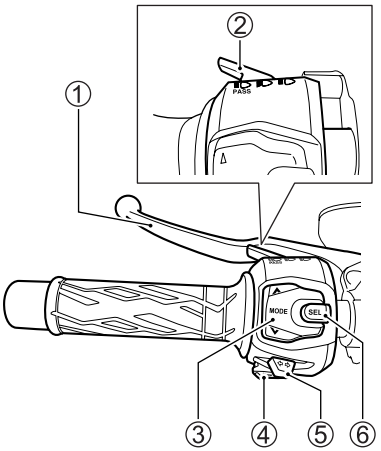

CLUTCH LEVER ①
The clutch lever is used for disengaging the drive to the rear wheel when starting the engine or shifting transmission gears. Squeezing the lever disengages the clutch.

DIMMER SWITCH ②
"≡D" position
The headlight low beam and taillight turn on.

"≡D" position
The headlight high beam and taillight turn on. The high beam indicator light also turns on.

Headlight flasher switch
Press the switch to flash the headlight.

NOTICE

Sticking tape or placing objects in front of the headlight can obstruct headlight heat radiation. This can result in headlight damage.

Do not stick tape on the headlight or place objects in front of the headlight.

NOTICE

Do not put objects in front of the headlight or taillight when they are on, and do not cover with clothes when the motorcycle is stopped.

This may cause melting of the lens or damage to the object by the heat from the lens.

MODE SWITCH ③
The MODE SWITCH has the same function as the SELECT switch. Refer to the INSTRUMENT PANEL and TRACTION CONTROL SYSTEM sections for details.

NOTE: For more detailed information on the traction control system, see page 2-26.

HORN SWITCH "⇀" ④
Press the switch to sound the horn.

TURN SIGNAL LIGHT SWITCH "⇦⇨" ⑤
Moving the switch to the "⇦" position will flash the left turn signals. Moving the switch to the "⇨" position will flash the right turn signals. The indicator light will also flash intermittently. To cancel turn signal operation, push the switch in.

⚠ WARNING

Failure to use the turn signals, and failure to turn off the turn signals can be hazardous. Other drivers may misjudge your course and this may result in an accident.

Always use the turn signals when you intend to change lanes or make a turn. Be sure to turn off the turn signals after completing the turn or lane change.

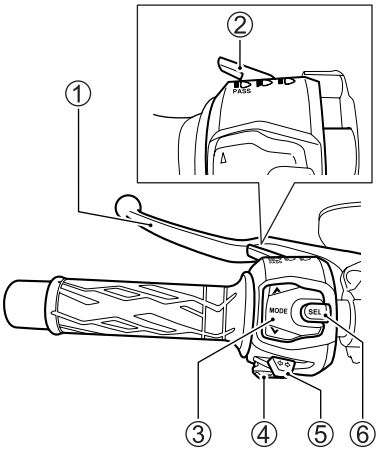

TRACTION CONTROL SYSTEM SELECT SWITCH ⑥

Traction control system
When the traction control system senses rear wheel spin during acceleration, it automatically controls engine power output to restore the gripping power of the rear tire. The traction control system indicator light blinks when the traction control system is controlling engine power output.

⚠ WARNING

Relying too much on the traction control system can be hazardous.

The traction control system cannot provide control to limit rear wheel spin under certain conditions. The system cannot control rear wheel spin resulting from high speed cornering, excessive bank angle, braking operation or engine braking effect. Be sure to operate the motorcycle at an appropriate speed according to your riding skill, weather and road conditions.

⚠ WARNING

Replacing the tires with other than the specified tires can be hazardous.

When replacing tires, be sure to mount the specified tires. If tires other than the specified size or type are mounted on the motorcycle, the traction control system will not be able to control engine power output properly.

NOTE:

- *When the traction control system is controlling engine power output, the engine sound and exhaust sound will change.*
- *When the front tire is not in full contact with the road surface due to sudden acceleration or other reasons, the traction control system will control engine power output.*
- *When the front or rear tires do not stay in full contact with the road surface, such as when riding on a bumpy road, the traction control system will control engine power output.*
- *When the traction control system is controlling engine power output, the engine speed will not increase even if the throttle grip is operated to increase engine power. If this happens, close the throttle completely to restore the normal condition.*

The traction control system can be set to OFF, Mode 1, Mode 2 or Mode 3.

<OFF>
The traction control system does not control engine power output even if the rear tire spins.

<Mode 1>
The sensitivity level of the traction control system is set low in this mode, so the traction control system allows a certain degree of wheel spin before controlling engine power output.

<Mode 2>
The sensitivity level of the traction control system is set middle in this mode, so the traction control system allows a lesser degree of wheel spin than when set in Mode 1 before controlling engine power output.

<Mode 3>
The sensitivity level of the traction control system is set high in this mode, so the traction control system allows a lesser degree of wheel spin than when set in Mode 2 before controlling engine power output.

⚠ WARNING

Failure to confirm that the traction control system is in the in the intended mode before operating the motorcycle can be hazardous.

Confirm that the traction control system is in the intended mode before operating the motorcycle.

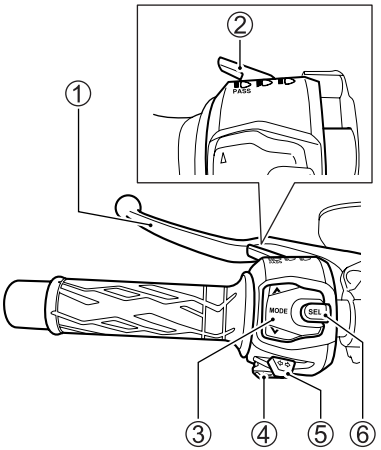

MODE SETTING

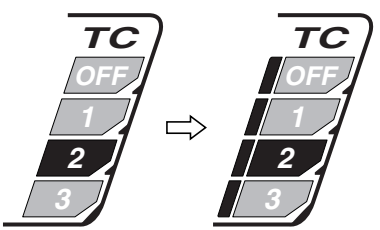

1. Press the traction control system select switch ⑥ for mode selection.

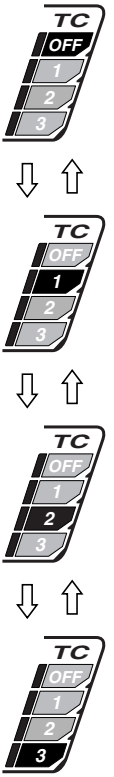

2. Press the Mode switch (UP, DOWN) ③ and change the indication on the traction control system display in the meter cluster to the desired mode. The display changes as shown in figure.
3. Press the traction control system select switch ⑥ to cancel the mode selection. The traction control system display in the meter cluster returns to the normal display mode.

NOTE:

- *Be sure to keep the throttle fully closed when changing the mode. If the change of mode is not possible because the throttle is not fully closed, a segment of the selected mode on the traction control system display blinks.*
- *The setting is retained in the memory even when the ignition switch is turned off.*
- *The setting of the traction control system is retained in the memory even when the battery becomes fully discharged or is disconnected and removed from the motorcycle.*

RIGHT HANDLEBAR

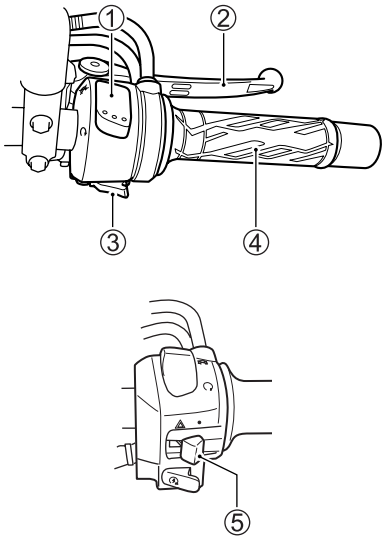

(EU)

ENGINE STOP SWITCH ①
"" position
The ignition circuit is off. The engine cannot start or run.

"" position
The ignition circuit is on and the engine can run.

FRONT BRAKE LEVER ②
The front brake is applied by squeezing the brake lever gently toward the throttle grip. This motorcycle is equipped with a disk brake system and excessive pressure is not required to slow the machine down properly. The brake light will be lit when the lever is squeezed inward.

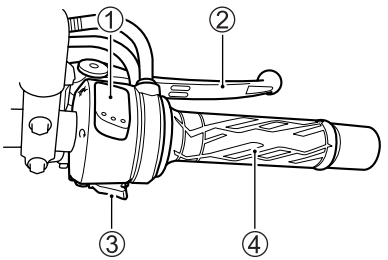

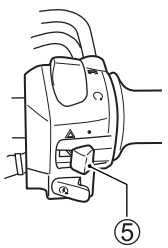

(EU)

Front Brake Lever Adjustment

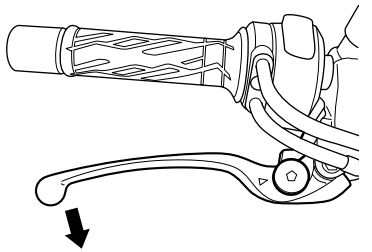

The distance between the throttle grip and the front brake lever is adjustable to 6 positions. To change the position, push the brake lever forward and turn the adjuster to the desired position. When changing the brake lever position, always be sure the adjuster stops in the proper position; a projection of the brake lever pivot should fit into the depression of the adjuster. This motorcycle is delivered from the factory with its adjuster set on position 3.

⚠ WARNING

Adjusting the front brake lever position while riding can be hazardous. Removing a hand from the handlebars can reduce your ability to control the motorcycle.

Never adjust the front brake lever position while riding. Keep both hands on the handlebars.

ELECTRIC STARTER SWITCH "⏲" ③

This switch is used for operating the starter motor. With the ignition switch in the "ON" position, the engine stop switch in "Ω" and the transmission in neutral, push the electric starter switch to start the engine.

NOTE: When the electric starter switch is pushed, the starter motor will continue turning for about 1.5 seconds even when you release your hand from the switch. After elapsing about 1.5 second, or when the engine is started, the starter motor will stop automatically.

NOTE: This motorcycle is equipped with an interlock system for the ignition circuit and the starter circuit. The engine can only be started if:

- *The transmission is in neutral, or*
- *The transmission is in gear, the side stand is fully up and the clutch is disengaged.*

NOTE: The headlight will go off when the electric starter switch is pushed.

NOTICE

Engaging the starter motor for more than five seconds at a time can damage the starter motor and wiring harness from overheating.

Do not engage the starter motor for more than five seconds at a time. If the engine does not start after several attempts, check the fuel supply and ignition system. Refer to the TROUBLESHOOTING section in this manual.

THROTTLE GRIP ④

Engine speed is controlled by the position of the throttle grip. Twist it toward you to increase engine speed. Turn it away from you to decrease engine speed.

HAZARD WARNING SWITCH "⚠" ⑤ (EU)

All four turn signal lights and indicators will flash simultaneously when the switch is turned on with the ignition switch in the "ON" or "P" position. Use the hazard warning lights to warn other traffic during emergency parking or when your vehicle could otherwise become a traffic hazard.

FUEL TANK CAP

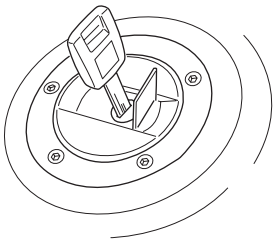

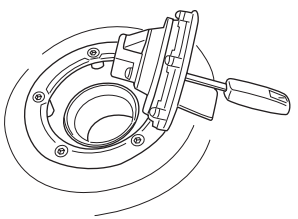

To open the fuel tank cap, insert the ignition key into the lock and turn it clockwise. With the key inserted, lift up with the key and open the fuel tank cap. To close the fuel tank cap, push the cap down firmly with the key in the cap lock.

Use fresh gasoline when filling up the fuel tank. Do not use bad gasoline which is contaminated with dirt, dust, water or other liquid. Be careful that dirt, dust or water does not enter the fuel tank when refueling.

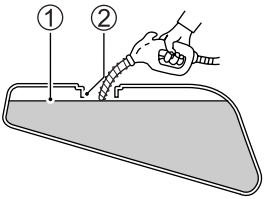

① Fuel level
② Filler neck

⚠ WARNING

If you overfill the fuel tank, fuel may overflow when it expands due to engine heat or heating by the sun. Fuel that overflows can catch fire.

Stop adding fuel when the fuel level reaches the bottom of the filler neck.

⚠ WARNING

Failure to follow safety precautions when refueling could result in a fire or cause you to breathe toxic fumes.

Refuel in a well ventilated area. Make sure the engine is off and avoid spilling fuel on a hot engine. Do not smoke, and make sure there are no open flames or sparks in the area. Avoid breathing gasoline vapors. Keep children and pets away when you refuel the motorcycle.

GEARSHIFT LEVER

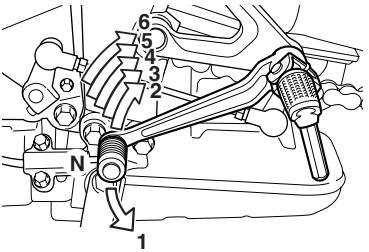

This motorcycle has a 6-speed transmission which operates as shown. To shift properly, squeeze the clutch lever and close the throttle at the same time you operate the gearshift lever. Lift the gearshift lever to upshift and depress the lever to downshift. Neutral is located between 1st and 2nd gear. When neutral is desired, depress or lift the lever halfway between 1st and 2nd gear.

NOTE: When the transmission is in neutral, the green indicator light on the instrument panel will be lit. However, even though the light is illuminated, cautiously and slowly release the clutch lever to make sure that the transmission is positively in neutral.

Reduce the motorcycle speed before down-shifting. When down-shifting, the engine speed should be increased before the clutch is engaged. This will prevent unnecessary wear on the drive train components and the rear tire.

REAR BRAKE PEDAL

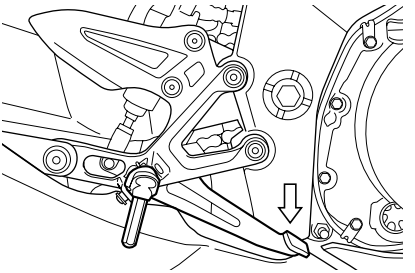

Depressing the rear brake pedal will apply the rear disk brake. The brake light will be illuminated when the rear brake is operated.

SEAT LOCK AND HELMET HOLDERS

SEAT LOCK

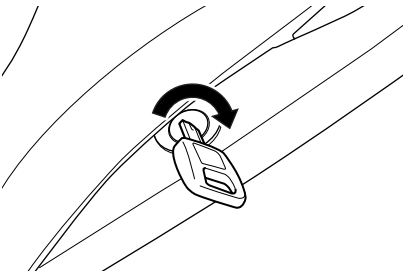

The seat lock is located under the left frame cover. To remove the rear seat, insert the ignition key into the lock and turn it clockwise. Raise the front end of the seat and slide it forward.

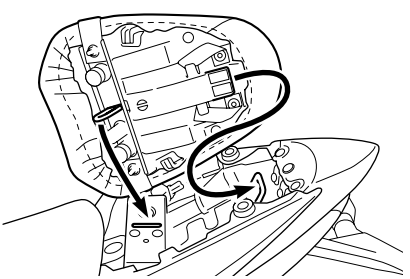

To reinstall the rear seat, slide the seat hooks into the seat hook retainers and push down firmly until the seat snaps into the locked position.

⚠ WARNING

Failure to install the seat properly could allow the seat to move and cause loss of rider control.

Latch the seat securely in its proper position.

FRONT SEAT REMOVAL

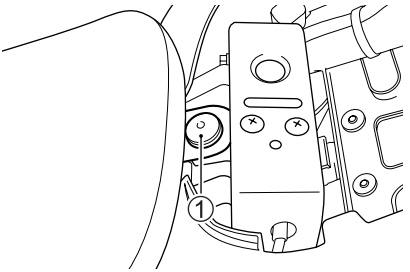

1. Remove the rear seat. Remove the bolt ①.

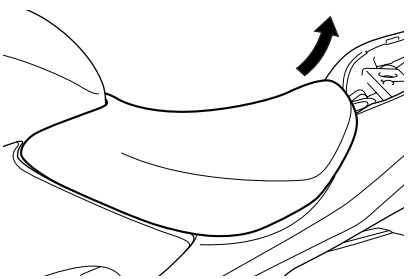

2. Raise the rear end of the seat and slide it backward.

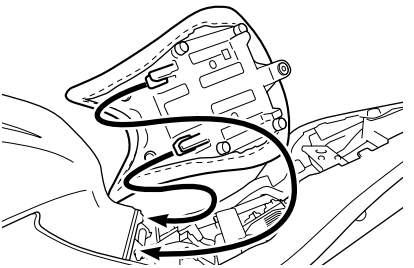

To reinstall the front seat, slide the seat hooks into the seat hook retainers on the frame and tighten the bolt securely.

⚠ WARNING

Failure to install the seat properly could allow the seat to move and cause loss of rider control.

Fasten the seat securely in its proper position.

HELMET HOLDERS

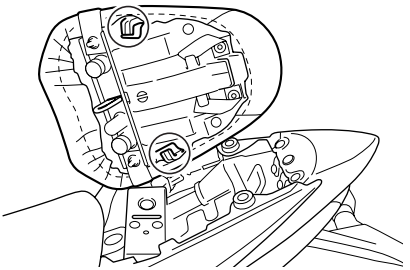

There are helmet holders underneath the rear seat. To use them, remove the seat, hook your helmet to the helmet holder and refit the seat.

⚠ WARNING

Riding with a helmet fastened to the helmet holder can interfere with rider control.

Never carry a helmet fastened to the helmet holder. Fix the helmet securely atop the seat if you must carry it.

LUGGAGE STRAPS

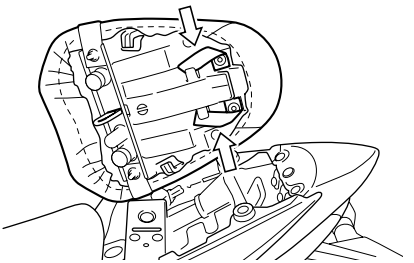

The luggage straps are folded under the seat. Extract the straps from the hooks and reinstall the seat with the straps out. Hook bands to the straps to fix luggage on the seat.

SIDE STAND

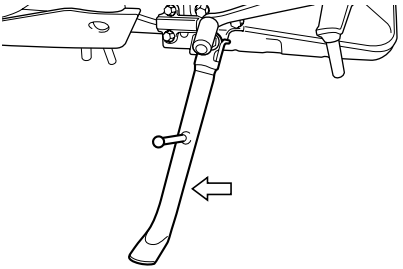

An interlock system is provided to cut off the ignition circuit when the side stand is down and the transmission is in any gear other than neutral.

The side stand/ignition interlock system works as follows:

- If the side stand is down and the transmission is in gear, the engine can not be started.
- If the engine is running and the transmission is shifted into gear with the side stand down, the engine will stop running.
- If the engine is running and the side stand is put down with the transmission in gear, the engine will stop running.

⚠ WARNING

Riding with the side stand incompletely retracted can result in an accident when you turn left.

Check operation of the side stand/ignition interlock system before riding. Always retract the side stand completely before starting off.

NOTICE

If you do not take proper precautions when parking, the motorcycle can fall over.

Park the motorcycle on firm, level ground whenever possible. If you must park on an incline, aim the front of the motorcycle uphill and put the transmission into 1st gear to reduce the possibility of rolling off the side stand.

SUSPENSION ADJUSTMENT

The standard settings for both the front and rear suspensions are selected to meet various riding conditions such as low to high motorcycle speed and light to heavy load on the motorcycle. The suspension settings can be adjusted and fine-tuned according to your preference.

NOTICE

Turning adjusters by force can damage the suspensions.

Do not turn adjusters beyond their natural limits.

FRONT SUSPENSION

Spring Pre-load Adjustment

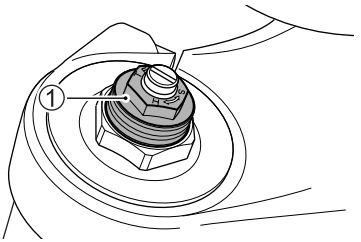

To change the spring pre-load, turn the adjuster ① clockwise or counterclockwise. Turning the adjuster clockwise will increase the spring pre-load. Turning the adjuster counterclockwise will decrease the spring pre-load. There are 5 grooved lines on the side of the adjuster ① for reference. Position 1 provides the minimum spring pre-load and position 5 provides the maximum pre-load. This motorcycle is delivered from the factory with its adjuster set on position 2.5.

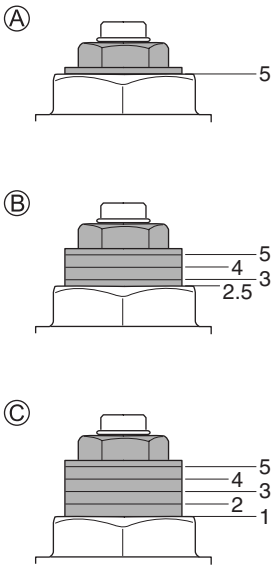

Ⓐ Position 5
Ⓑ Position 2.5
Ⓒ Position 1

⚠ WARNING

Unequal suspension adjustment can cause poor handling and instability.

Adjust the right and left front forks to the same setting.

Damping Force Adjustment
The rebound and compression damping force can be individually adjusted by turning the respective adjusters. The rebound damping force adjusters ② are located at the top of the front suspension. The compression damping force adjusters ③ are located at the bottom of the front suspension.

To adjust the damping force, set the adjuster to the standard setting first and then adjust the adjuster to the desired position.

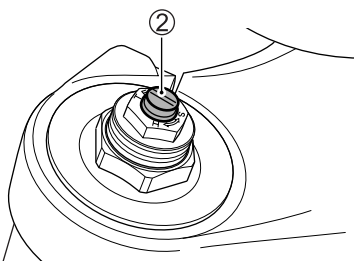

To set the rebound damping force adjuster to the standard position, turn the adjuster clockwise until it stops and then turn it counterclockwise 8 clicks.

Turn the adjuster clockwise from the standard position to stiffen the damping force. Turn the adjuster counterclockwise to soften the damping force. The damping force should be adjusted gradually, 1 click at a time, to fine-tune the suspension.

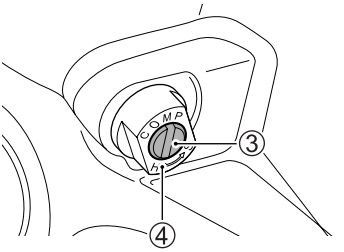

To set the compression damping force adjuster to the standard position, turn the adjuster clockwise until it stops and then turn it counterclockwise 8 clicks.

Turn the adjuster clockwise from the standard position to stiffen the damping force. Turn the adjuster counterclockwise to soften the damping force. The damping force should be adjusted gradually, 1 click at a time, to fine-tune the suspension.

NOTE: Do not loosen the adjuster base ④, or front fork oil will ooze through the adjuster base.

⚠ WARNING

Unequal suspension adjustment can cause poor handling and instability.

Adjust the right and left front forks to the same setting.

REAR SUSPENSION
Spring Pre-load Adjustment



The rear suspension spring pre-load is adjustable to compensate for the rider, load, riding style and road conditions. The spring pre-load is adjustable to 7 positions. To change the spring pre-load setting, place the motorcycle on the side stand. Twist the spring tension ring to the desired position with the adjuster provided in the tool kit. Position 1 provides the softest spring tension and position 7 provides the stiffest. This motorcycle is delivered from the factory with its adjuster set on position 4 (GSX-S1000/A), position 3 (GSX-S1000F/FA).

Rear Suspension Label

⚠ WARNING



This unit contains high-pressure nitrogen gas.
Mishandling can cause explosion.

- **Keep away from fire and heat.**
- **Read owner's manual for more information.**

NOTE: Ask your Suzuki dealer to dispose of the rear suspension unit.

Damping Force Adjustment

The rebound damping force can be adjusted by turning the adjuster ①. The rebound damping force adjuster ① is located at the bottom of the rear suspension.

To adjust the damping force, set the adjuster to the standard setting first and then adjust the adjuster to the desired position.

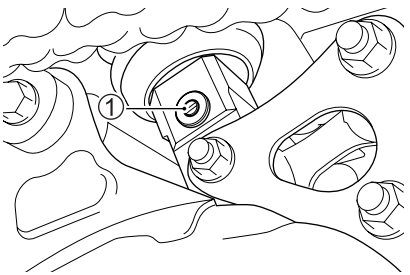

To set the rebound damping force adjuster to the standard position, turn the adjuster clockwise until it stops and then turn it counterclockwise 1 turn.

Turn the adjuster clockwise from the standard position to stiffen the damping force. Turn the adjuster counterclockwise to soften the damping force. The damping force should be adjusted gradually, 1/8 turn at a time, to fine-tune the suspension.



FUEL, ENGINE OIL AND COOLANT RECOMMENDATIONS

FUEL OCTANE RATING 3-2
OXYGENATED FUEL RECOMMENDATION 3-2
ENGINE OIL 3-4
ENGINE COOLANT SOLUTION 3-5

FUEL, ENGINE OIL AND COOLANT RECOMMENDATIONS

FUEL OCTANE RATING

Use premium unleaded gasoline with an octane rating of 95 or higher (Research method). Unleaded gasoline can extend spark plug life and exhaust components life.

(Canada)

Your motorcycle requires premium unleaded gasoline whenever possible, with a minimum pump octane rating of 90 ((R+M)/2 method). In some areas, the only fuels that are available are oxygenated fuels.

NOTE:

- *The GSX-S1000/A/F/FA engine is designed to use premium unleaded gasoline only. Use premium unleaded gasoline under all riding conditions.*
- *If the engine develops some trouble like lack of acceleration or insufficient power, the cause may be due to the fuel the motorcycle uses. In such case, try changing the gas station to another. If the situation is not improved by changing, consult your Suzuki dealer.*

OXYGENATED FUEL RECOMMENDATION

(Canada, EU)

Oxygenated fuels which meet the minimum octane requirement and the requirements described below may be used in your motorcycle without jeopardizing the New Vehicle Limited Warranty or the Emission Control System Warranty.

NOTE: Oxygenated fuels are fuels which contain oxygen carrying additives such as MTBE or alcohol.

Gasoline Containing MTBE

Unleaded gasoline containing MTBE (Methyl Tertiary Butyl Ether) may be used in your motorcycle if the MTBE content is not greater than 15%. This oxygenated fuel does not contain alcohol.

Gasoline/Ethanol Blends

Blends of unleaded gasoline and ethanol (grain alcohol), also known as “GASOHOL”, may be used in your motorcycle if the ethanol content is not greater than 10%.

Gasoline/Methanol Blends

Fuels containing 5% or less methanol (wood alcohol) may be suitable for use in your motorcycle if they contain co-solvents and corrosion inhibitors.

DO NOT USE fuels containing more than 5% methanol under any circumstances. Fuel system damage or motorcycle performance problems resulting from the use of such fuels are not the responsibility of Suzuki and may not be covered under the New Vehicle Limited Warranty or the Emission Control System Warranty.

NOTE:

- *To help minimize air pollution, Suzuki recommends that you use oxygenated fuels.*
- *Be sure that any oxygenated fuel you use has recommended octane ratings.*
- *If you are not satisfied with the drivability of your motorcycle when you are using an oxygenated fuel, or if engine pinging is experienced, substitute another brand as there are differences between brands.*

NOTICE

Spilled gasoline containing alcohol can damage the painted surfaces of your motorcycle.

Be careful not to spill any fuel when filling the fuel tank. Wipe spilled gasoline up immediately.

NOTICE

Do not use leaded gasoline.

Use of leaded gasoline causes the catalytic converter to malfunction.

ENGINE OIL

Use Suzuki genuine engine oil or equivalent. If Suzuki genuine engine oil is not available, select a proper engine oil according to the following guideline.

Oil quality is a major contributor to your engine's performance and life. Always select good quality engine oil. Use oil with an API (American Petroleum Institute) classification of SG, SH, SJ or SL with a JASO classification of MA.

SAE	API	JASO
10W-40	SG, SH, SJ or SL	MA

API: American Petroleum Institute
JASO: Japanese Automobile Standards Organization

SAE Engine Oil Viscosity

Suzuki recommends the use of SAE 10W-40 engine oil. If SAE 10W-40 engine oil is not available, select an alternative according to the following chart.

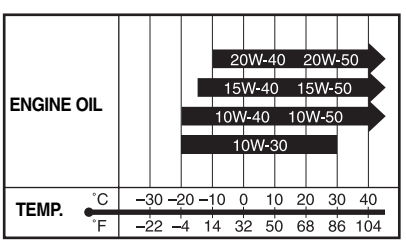

JASO T903

The JASO T903 standard is an index to select engine oils for 4-stroke motorcycle and ATV engines. Motorcycle and ATV engines lubricate clutch and transmission gears with engine oil. JASO T903 specifies performance requirements for motorcycle and ATV clutches and transmissions.

There are two classes, MA and MB. The oil container shows the classification as follows.

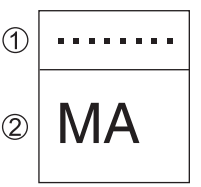

① Code number of oil sales company
② Oil classification

Energy Conserving

Suzuki does not recommend the use of "ENERGY CONSERVING" or "RESOURCE CONSERVING" oils. Some engine oils which have an API classification of SH, SJ or SL have an "ENERGY CONSERVING" indication in the API classification donut mark. These oils can affect engine life and clutch performance.

API SG, SH, SJ or SL



Recommended

API SH, SJ or SL



Not recommended

ENGINE COOLANT SOLUTION

Use "SUZUKI SUPER LONG LIFE COOLANT" or "SUZUKI LONG LIFE COOLANT". If "SUZUKI SUPER LONG LIFE COOLANT" and "SUZUKI LONG LIFE COOLANT" are not available, use a glycol-based antifreeze compatible with an aluminum radiator mixed with distilled water only at the ratio of 50:50.

⚠ WARNING

Engine coolant is harmful or fatal if swallowed or inhaled. Solution can be poisonous to animals.

Do not drink antifreeze or coolant solution. If swallowed, do not induce vomiting. Immediately contact a poison control center or a physician. Avoid inhaling mist or hot vapors; if inhaled, remove to fresh air. If coolant gets in eyes, flush eyes with water and seek medical attention. Wash thoroughly after handling. Keep out of the reach of children and animals.

NOTICE

Spilled engine coolant can damage the painted surfaces of your motorcycle.

Be careful not to spill any fluid when filling the radiator. Wipe spilled engine coolant up immediately.

Engine coolant
Engine coolant performs as a rust inhibitor and water pump lubricant as well as an anti-freeze solution. Therefore engine coolant should be used at all times even though the atmospheric temperature in your area does not go down to the freezing point.

SUZUKI SUPER LONG LIFE COOLANT (Blue)
"SUZUKI SUPER LONG LIFE COOLANT" is pre-mixed to the proper ratio. Add only "SUZUKI SUPER LONG LIFE COOLANT" if coolant level drops. It is not necessary to dilute "SUZUKI SUPER LONG LIFE COOLANT" when replacing coolant.

SUZUKI LONG LIFE COOLANT (Green)

Water for mixing
Use distilled water only. Water other than distilled water can corrode and clog the aluminium radiator.

Required amount of water/coolant
Solution capacity (total):
2800 ml (6.0/5.0 US/Imp. qt)

50%	Water	1400 ml (3.0/2.5 US/Imp. qt)
	Coolant	1400 ml (3.0/2.5 US/Imp. qt)

NOTE: This 50% mixture will protect the cooling system from freezing at temperatures above –31°C (–24°F). If the motorcycle is to be exposed to temperature below –31°C (–24°F), this mixing ratio should be increased up to 55% (–40°C/–40°F) or 60% (–55°C/–67°F) coolant. The mixing ratio should not exceed 60% coolant.

BREAK-IN (RUNNING-IN) AND INSPECTION BEFORE RIDING

MAXIMUM ENGINE SPEED RECOMMENDATION 4-2
VARY THE ENGINE SPEED 4-2
BREAKING IN THE NEW TIRES 4-2
AVOID CONSTANT LOW SPEED 4-2
ALLOW THE ENGINE OIL TO CIRCULATE BEFORE RIDING 4-3
OBSERVE YOUR FIRST AND MOST CRITICAL SERVICE 4-3
INSPECTION BEFORE RIDING 4-3

BREAK-IN (RUNNING-IN) AND INSPECTION BEFORE RIDING

Previous sections explains how important proper break-in is to achieving maximum life and performance from your new Suzuki. The following guidelines explain proper break-in procedures.

MAXIMUM ENGINE SPEED RECOMMENDATION

This table shows the maximum recommended engine speed during the break-in period.

Initial	800 km (500 miles)	Below 5700 rpm
Up to	1600 km (1000 miles)	Below 8600 rpm
Over	1600 km (1000 miles)	Below 11500 rpm

VARY THE ENGINE SPEED

The engine speed should be varied and not held at a constant speed. This allows the parts to be “loaded” with pressure, and then unloaded, allowing the parts to cool. This aids the mating process of the parts. It is essential that some stress be placed on the engine components during break-in to ensure this mating process. Do not, though, apply excessive load on the engine.

BREAKING IN THE NEW TIRES

New tires need proper break-in to assure maximum performance, just as the engine does. Wear in the tread surface by gradually increasing your cornering lean angles over the first 160 km (100 miles) before attempting maximum performance. Avoid hard acceleration, hard cornering, and hard braking for the first 160 km (100 miles).

⚠ WARNING

Failure to perform break-in of the tires could cause tire slip and loss of control.

Use extra care when riding on new tires. Perform proper break-in of the tires as described in this section and avoid hard acceleration, hard cornering, and hard braking for the first 160 km (100 miles).

AVOID CONSTANT LOW SPEED

Operating the engine at constant low speed (light load) can cause parts to glaze and not seat in. Allow the engine to accelerate freely through the gears, without exceeding the recommended maximum limits. Do not, however, use full throttle for the first 1600 km (1000 miles).

ALLOW THE ENGINE OIL TO CIRCULATE BEFORE RIDING

Allow sufficient idling time after warm or cold engine start up before applying load or revving the engine. This allows time for the lubricating oil to reach all critical engine components.

OBSERVE YOUR FIRST AND MOST CRITICAL SERVICE

The initial service (1000 km maintenance) is the most important service your motorcycle will receive. During break-in operation, all of the engine components will have mated together and seated. Maintenance required as part of the initial service includes correction of all adjustments, tightening of all fasteners and replacement of dirty oil. Timely performance of this service will help make sure you get the best service life and performance from the engine.

NOTE: The 1000 km (600 miles) service should be performed as outlined in the INSPECTION AND MAINTENANCE section of this Owner's Manual. Pay particular attention to the CAUTION and WARNING messages in that section.

INSPECTION BEFORE RIDING

⚠ WARNING

Failure to inspect your motorcycle before riding and to properly maintain your motorcycle increases the chances of an accident or equipment damage.

Always inspect your motorcycle each time you use it to make sure it is in safe operating condition. Refer to the INSPECTION AND MAINTENANCE section in this owner's manual.

⚠ WARNING

If you operate this motorcycle with improper tires or improper or uneven tire pressure, you may lose control of the motorcycle. This will increase your risk of an accident.

Always use tires of the size and type specified in this owner's manual. Always maintain proper tire pressure as described in the INSPECTION AND MAINTENANCE section.

Before riding the motorcycle, be sure to check the following items. Never underestimate the importance of these checks. Perform all of them before riding the motorcycle.

⚠ WARNING

Checking maintenance items when the engine is running can be hazardous. You could be severely injured if your hands or clothing get caught in moving engine parts.

Shut the engine off when performing maintenance checks, except when checking the lights, engine stop switch, and throttle.

WHAT TO CHECK	CHECK FOR:
Steering	• Smoothness • No restriction of movement • No play or looseness
Throttle (☞ 6-30)	• Correct play in the throttle cable • Smooth operation and positive return of the throttle grip to the closed position
Clutch (☞ 6-31)	• Correct lever play • Smooth and progressive action
Brakes (☞ 2-30, 2-33, 6-38)	• Proper pedal and lever operation • Fluid level in the reservoirs to be above “LOWER” line • Correct pedal and lever play • No “sponginess” • No fluid leakage • Brake pads not to be worn down to the limit line
Suspension (☞ 2-38)	Smooth movement
Fuel (☞ 2-18)	Enough fuel for the planned distance of operation
Drive chain (☞ 6-34)	• Correct tension or slack • Adequate lubrication • No excessive wear or damage
Tires (☞ 6-42)	• Correct pressure • Adequate tread depth • No cracks or cuts
Engine oil (☞ 6-24)	Correct level
Cooling system (☞ 6-32)	• Proper coolant level • No coolant leakage
Lighting (☞ 2-7, 2-10, 2-24)	Operation of all lights and indicators
Horn (☞ 2-25)	Correct function
Engine stop switch (☞ 2-29)	Correct function
Side stand/ Ignition interlock system (☞ 6-46)	Proper operation
Windshield (GSX-S1000F/ FA) (☞ 8-5)	Good visibility

RIDING TIPS

STARTING THE ENGINE 5-2
STARTING OFF 5-3
USING THE TRANSMISSION 5-4
RIDING ON HILLS 5-5
STOPPING AND PARKING 5-6

STARTING THE ENGINE

Before attempting to start the engine, make sure:

- The transmission is in neutral.
- The engine stop switch is in the "⟳" position.

NOTE: When the electric starter switch is pushed, the starter motor will continue turning for about 1.5 seconds even when you release your hand from the switch. After elapsing about 1.5 second, or when the engine is started, the starter motor will stop automatically.

NOTE: This motorcycle is equipped with an interlock system for the ignition circuit and the starter circuit.
The engine can only be started if:

- *The transmission is in neutral, or*
- *The transmission is in gear, the side stand is fully up and the clutch is disengaged.*

NOTE: The fuel supply system stops the engine when the motorcycle is overturned. Turn off the ignition switch before restarting the engine.

When the Engine is Cold:

1. Close the throttle completely and push the electric starter switch.
2. After the engine starts, let the engine run until the engine sufficiently warms up.

When a Cold Engine is Hard to Start:

1. Open the throttle approximately 1/8 turn and push the electric starter switch.
2. After the engine starts, let the engine run until the engine sufficiently warms up.

When the Engine is Warm:

Close the throttle completely and push the electric starter switch.

When a Warm Engine is Hard to Start:

Open the throttle approximately 1/8 turn and push the electric starter switch.

⚠ WARNING

Exhaust gas contains carbon monoxide, a dangerous gas that is difficult to detect because it is colorless and odorless. Breathing carbon monoxide can cause death or severe injury.

Never start the engine or let it run indoors or where there is little or no ventilation.

NOTICE

Running the engine too long without riding may cause the engine to overheat. Overheating can result in damage to internal engine components and discoloration of exhaust pipes.

Shut the engine off if you cannot begin your ride promptly.

STARTING OFF

⚠ WARNING

Riding at excessive speeds increases your chances of losing control of the motorcycle, which can result in an accident.

Always ride at a speed that is proper for the terrain, visibility and operating conditions, and your skills and experience.

⚠ WARNING

If you remove even one hand or foot from the motorcycle, you can reduce your ability to control the motorcycle. This could cause you to lose your balance and fall off the motorcycle. If you remove a foot from a footrest, your foot or leg may come in contact with the rear wheels. This could injure you or cause an accident.

Always keep both hands on the handlebars and both feet on the footrests of your motorcycle during operation.

⚠ WARNING

Sudden side winds, which can occur when being passed by larger vehicles, at tunnel exits or in hilly areas, can cause you to lose control of the motorcycle.

Reduce your speed and be alert to the possibility of sudden side winds.

After moving the side stand to the fully up position, squeeze the clutch lever and pause momentarily. Engage first gear by depressing the gear shift lever downward. Twist the throttle grip toward you and at the same time release the clutch lever gently and smoothly. As the clutch engages, the motorcycle will start moving forward. To shift to the next higher gear, accelerate gently, then close the throttle and squeeze the clutch lever simultaneously. Lift the gear shift lever upward to select the next gear, release the clutch lever and open the throttle again. Select higher gears in this manner until top gear is reached.

NOTE: This motorcycle is equipped with a side stand/ignition interlock system. If you shift the transmission into gear when the side stand is down, the engine will stop running.

USING THE TRANSMISSION

The transmission is provided to keep the engine operating smoothly in its normal operating speed range. The gear ratios have been carefully chosen to meet the characteristics of the engine. The rider should always select the most suitable gear for the prevailing conditions. Never slip the clutch to control road speed, but rather downshift to allow the engine to run within its normal operational range.

(Canada)

The table below shows the approximate speed range for each gear.

Shifting up schedule

Gear position	km/h	miles/h
1st → 2nd	20	12
2nd → 3rd	30	19
3rd → 4th	40	25
4th → 5th	50	31
5th → 6th	60	37

Shifting down schedule

Gear position	km/h	miles/h
6th → 5th	50	31
5th → 4th	40	25
4th → 3rd	30	19

Disengage the clutch when the motorcycle speed drops below 20 km/h (12 miles/h).

⚠ WARNING

Downshifting when engine speed is too high can:

- **cause the rear wheel to skid and lose traction due to increased engine braking, resulting in an accident; or**
- **force the engine to overrev in the lower gear, resulting in engine damage.**

Reduce speed before downshifting.

⚠ WARNING

Downshifting while the motorcycle is leaned over in a corner may cause rear wheel skid and loss of control.

Reduce your speed and downshift before entering a corner.

NOTICE

Revving the engine into the red zone can cause severe engine damage.

Never allow the engine to rev into the red zone in any gear.

NOTICE

Improper gearshift lever operation can damage the transmission.

- **Do not rest your foot on the gearshift lever.**
- **Do not use force to shift gears.**

RIDING ON HILLS

- When climbing steep hills, the motorcycle may begin to slow down and show lack of power. At this point you should shift to a lower gear so that the engine will again be operating in its normal power range. Shift rapidly to prevent the motorcycle from losing momentum.
- When descending a long, steep slope, use the engine compression to assist the brakes by shifting to a lower gear. Continuous brake application can overheat the brakes and reduce their effectiveness.
- Be careful, however, not to allow the engine to over rev.

STOPPING AND PARKING

Anti-lock Brake System (ABS) (GSX-S1000A/FA)

This model is equipped with an Anti-lock Brake System (ABS) designed to help prevent wheel lock up during hard braking or during braking on slippery surfaces while riding in a straight line.

The ABS will operate whenever it senses that the wheels are locking up. You may feel the brake lever and/or the brake pedal pulsate lightly while the ABS is operating.

Even though ABS helps prevent wheel lock-up, you must still be careful when braking in curves. Hard braking while turning could cause wheel skidding and loss of control, whether or not your motorcycle is equipped with ABS. Having ABS does not mean you can take unnecessary risks. ABS will not compensate for poor judgment, incorrect braking techniques, or not slowing down over bad roads or in poor weather conditions.

You must still ride sensibly and alertly.

On regular paved roads, some riders may be able to obtain slightly shorter stopping distances with conventional brake systems than with ABS.

NOTE: In some situations, a motorcycle with ABS may require a longer stopping distance to stop on loose or uneven surfaces than an equivalent motorcycle without ABS.

⚠ WARNING

Inexperienced riders tend to underutilize the front brake. This can cause excessive stopping distance and lead to a collision. Using only the front or rear brake can cause skidding and loss of control.

Apply both brakes evenly and at the same time.

⚠ WARNING

Braking while turning the motorcycle can be hazardous, whether or not your motorcycle is equipped with ABS. ABS can not control wheel side-slips that occur when you brake hard while turning and the side-slips could cause loss of control.

Slow down sufficiently in a straight line before you begin to turn and avoid other than slight braking while turning.

⚠ WARNING

Failure to use good judgment with ABS can be hazardous. ABS cannot make up for bad road conditions, bad judgement, or improper operation of the brakes.

Remember that ABS will not compensate for poor judgment, incorrect braking techniques, or the need to slow down over bad roads or in poor weather conditions. Use good judgment and do not ride faster than conditions will safely allow.

How the ABS Works (GSX-S1000A/FA)

ABS works by electronically controlling braking pressure. A computer monitors wheel rotation speed. If the computer detects that a braked wheel has slowed suddenly, indicating a skidding situation, the computer will reduce braking pressure to prevent that wheel from locking up. ABS works automatically, so you do not need any special braking technique. Just apply the front and rear brakes, as forcefully as necessary for the situation, without pumping either one. It is normal for the brake lever/pedal to pulsate while the ABS is operating.

Non-recommended tires can affect wheel speed and may confuse the computer.

ABS does not work at very low speed, less than about 5 km/h (3 mph), and does not work with a discharged battery.

Stopping and Parking

1. Twist the throttle grip away from yourself to close the throttle completely.
2. Apply the front and rear brakes evenly and at the same time.
3. Downshift through the gears as road speed decreases.
4. Select neutral with the clutch lever squeezed toward the grip (disengaged position) when the motorcycle is almost completely stopped. The neutral position can be confirmed by observing the neutral indicator light.

⚠ WARNING

Inexperienced riders tend to underutilize the front brake. This can cause excessive stopping distance and lead to a collision. Using only the front or rear brake can cause skidding and loss of control.

Apply both brakes evenly and at the same time.

⚠ WARNING

Hard braking while turning may cause wheel skid and loss of control.

Brake before you begin to turn.

⚠ WARNING

Hard braking on wet, loose, rough, or other slippery surfaces can cause wheel skid and loss of control.

Brake lightly and with care on slippery or irregular surfaces.

⚠ WARNING

Following another vehicle too closely can lead to a collision. As vehicle speeds increase, stopping distance increases progressively.

Always maintain a safe stopping distance between you and the vehicle in front of you.

NOTICE

Holding the motorcycle stopped with throttle and clutch lever operation on inclines can damage the motorcycle's clutch.

Use the brakes when stopping the motorcycle on inclines.

5. Park the motorcycle on a firm, flat surface where it will not fall over.

⚠ CAUTION

A hot muffler can cause severe burns. The muffler will be hot enough to cause burns for some time after stopping the engine.

Park the motorcycle where pedestrians or children are not likely to touch the muffler.

NOTE: If the motorcycle is to be parked on the side stand on a slight slope, the front end of the motorcycle should face "up" the incline to avoid rolling forward off the side stand. You may leave the motorcycle in 1st gear to help prevent it from rolling off the side stand. Shift to neutral before starting the engine.

6. Turn the ignition key to the "OFF" position.
7. Turn the handlebars all the way to the left and lock the steering for security.
8. Remove the ignition key.

NOTE: If an optional anti-theft lock such as a U-shape lock, brake disk lock or chain is used to avoid theft, be sure to remove the anti-theft lock before moving the motorcycle.



INSPECTION AND MAINTENANCE

MAINTENANCE SCHEDULE 6-2
TOOLS 6-6
METER PANEL REMOVAL AND INSTALLATION (GSX-S1000F/FA) 6-6
FAIRING REMOVAL AND INSTALLATION (GSX-S1000F/FA) 6-10
FUEL TANK LIFT 6-15
LUBRICATION POINTS 6-18
BATTERY 6-19
AIR CLEANER 6-21
FUEL HOSE 6-24
ENGINE OIL 6-24
ENGINE IDLE SPEED INSPECTION 6-29
THROTTLE CABLE ADJUSTMENT 6-30
CLUTCH 6-31
COOLANT 6-32
DRIVE CHAIN 6-34
BRAKES 6-38
TIRES 6-42
SIDE STAND/IGNITION INTERLOCK SYSTEM 6-46
FRONT WHEEL REMOVAL 6-47
REAR WHEEL REMOVAL 6-50
LIGHT BULB REPLACEMENT 6-52
FUSES 6-58
HANDLEBAR FITTING 6-60
CATALYTIC CONVERTER 6-61

INSPECTION AND MAINTENANCE

MAINTENANCE SCHEDULE

The chart indicates the intervals between periodic services in miles, kilometers and months. At the end of each interval, be sure to inspect, check, lubricate and service as instructed. If your motorcycle is used under high stress conditions such as continuous full throttle operation, or is operated in a dusty climate, certain services should be performed more often to ensure reliability of the machine as explained in the maintenance section. Your Suzuki dealer can provide you with further guidelines. Steering components, suspensions and wheel components are key items and require very special and careful servicing. For maximum safety we suggest that you have these items inspected and serviced by your authorized Suzuki dealer or a qualified service mechanic.

⚠ WARNING

Improper maintenance or failure to perform recommended maintenance can lead to an accident.

Keep your motorcycle in good condition. Ask your Suzuki dealer or a qualified mechanic to perform the maintenance items marked with an asterisk (*). You may perform the unmarked maintenance items by referring to the instructions in this section, if you have mechanical experience. If you are not sure how to do any of the jobs, ask your Suzuki dealer to do the maintenance.

⚠ WARNING

Exhaust gas contains carbon monoxide, a dangerous gas that is difficult to detect because it is colorless and odorless. Breathing carbon monoxide can cause death or severe injury.

Never start the engine or let it run indoors or where there is little or no ventilation.

NOTICE

Servicing electric parts with the ignition switch in the "ON" position can damage the electric parts when the electric circuit is shorted.

Turn off the ignition switch before servicing the electric parts to avoid short-circuit damage.

NOTICE

Poorly-made replacement parts can cause your motorcycle to wear more quickly and may shorten its useful life.

When replacing parts on your vehicle, use only genuine Suzuki replacement parts or their equivalent.

NOTE: The MAINTENANCE CHART specified the minimum requirements for maintenance. If you use your motorcycle under severe conditions, perform maintenance more often than shown in the chart. If you have any questions regarding maintenance intervals, consult your Suzuki dealer or a qualified mechanic.

MAINTENANCE CHART

Interval: This interval should be judged by number of months or odometer reading, whichever comes first.

Item \ Interval		months	2	12	24	36	48
		km	1000	6000	12000	18000	24000
		miles	600	4000	7500	11000	14500
Air cleaner element (☞ 6-21)			–	I	I	R	I
* Exhaust pipe bolts and muffler bolts			T	–	T	–	T
* Exhaust control valve			I	–	I	–	I
* Valve clearance			–	–	–	–	I
* Spark plugs			–	I	R	I	R
Fuel hose (☞ 6-24)			–	I	I	I	I
Engine oil (☞ 6-24)			R	R	R	R	R
Engine oil filter (☞ 6-24)			R	–	–	R	–
Throttle cable play (☞ 6-30)			I	I	I	I	I
* PAIR (air supply) system			–	–	I	–	I
* Throttle valve synchronization			–	–	I	–	I
* Engine coolant (☞ 6-32)	"SUZUKI SUPER LONG LIFE COOLANT" (Blue)		Replace every 4 years or 48000 km (29000 miles)				
	"SUZUKI LONG LIFE COOLANT" (Green) or an engine coolant other than "SUZUKI SUPER LONG LIFE COOLANT" (Blue)		–	–	R	–	R
Radiator hose (☞ 6-33)			–	I	I	I	I
Clutch cable play (☞ 6-31)			–	I	I	I	I
Drive chain (☞ 6-34)			I	I	I	I	I
			Clean and lubricate every 1000 km (600 miles)				
* Brakes (☞ 6-38)			I	I	I	I	I
Brake fluid (☞ 6-38)			–	I	I	I	I
			*Replace every 2 years				
Brake hose (☞ 6-38)			–	I	I	I	I
			*Replace every 4 years				
Tires (☞ 6-42)			–	I	I	I	I
* Steering			I	–	I	–	I
* Front forks (☞ 2-38)			–	–	I	–	I
* Rear suspension (☞ 2-41)			–	–	I	–	I
* Chassis bolts and nuts			T	T	T	T	T
Lubrication (☞ 6-18)			Lubricate every 1000 km (600 miles)				

NOTE: I= Inspect and clean, adjust, replace or lubricate as necessary, R= Replace, T= Tighten

For Europe and Oceania countries

Item \ Interval		months	2	12	24	36	48
		km	1000	12000	24000	36000	48000
		miles	600	7500	15000	22500	30000
Air cleaner element (☞ 6-21)			–	I	I	R	I
* Exhaust pipe bolts and muffler bolts			T	T	T	T	T
* Exhaust control valve			I	–	I	–	I
* Valve clearance			Inspect every 24000 km (15000 miles)				
* Spark plugs			–	R	R	R	R
Fuel hose (☞ 6-24)			–	I	I	I	I
Engine oil (☞ 6-24)			R	R	R	R	R
Engine oil filter (☞ 6-24)			R	–	R	–	R
Throttle cable play (☞ 6-30)			I	I	I	I	I
* PAIR (air supply) system			–	–	I	–	I
* Throttle valve synchronization			–	I	I	I	I
* Engine coolant (☞ 6-32)	"SUZUKI SUPER LONG LIFE COOLANT" (Blue)		–	–	–	–	R
	"SUZUKI LONG LIFE COOLANT" (Green) or an engine coolant other than "SUZUKI SUPER LONG LIFE COOLANT" (Blue)		–	–	R	–	R
Radiator hose (☞ 6-33)			–	I	I	I	I
Clutch cable play (☞ 6-31)			–	I	I	I	I
Drive chain (☞ 6-34)			I	I	I	I	I
			Clean and lubricate every 1000 km (600 miles)				
* Brakes (☞ 6-38)			I	I	I	I	I
Brake fluid (☞ 6-38)			Inspect every year or 6000 km (4000 miles) * Replace every 2 years				
Brake hose (☞ 6-38)			–	I	I	I	I
			*Replace every 4 years				
Tires (☞ 6-42)			–	I	I	I	I
* Steering			I	I	I	I	I
* Front forks (☞ 2-38)			–	I	I	I	I
* Rear suspension (☞ 2-41)			–	I	I	I	I
* Chassis bolts and nuts			T	T	T	T	T
Lubrication (☞ 6-18)			Lubricate every 1000 km (600 miles)				

NOTE: I and Inspect= Inspect and clean, adjust, replace or lubricate as necessary; R= Replace; T= Tighten

TOOLS

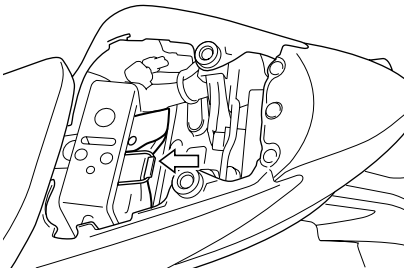

A tool kit is supplied and located under the rear seat.

METER PANEL REMOVAL AND INSTALLATION (GSX-S1000F/FA)

REMOVAL

1. Place the motorcycle on the side stand.

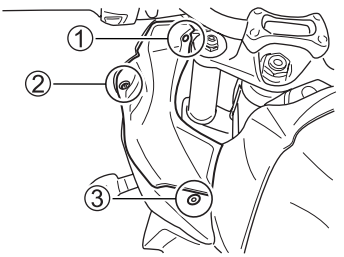

2. Remove the fastener ①, bolt ② and bolt ③ of the right and left meter panels.

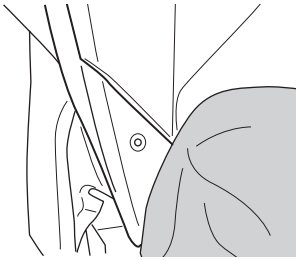

3. Place a cloth between the meter panel and the fuel tank to prevent damage to the fuel tank.

NOTICE

When removing the meter panel, the bolt mounting part on the rear end may cause damage to the fuel tank and fairing.

When removing the meter panel, use a cloth to prevent scratches, and carefully remove the panel using the following procedure.

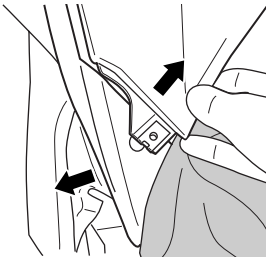

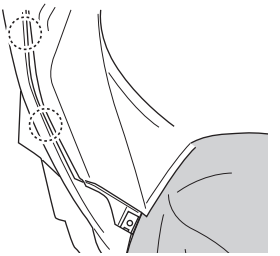

4. Remove the meter panel starting from the rear end portion. Lightly press the fairing toward the outside of the motorcycle (in the direction of the arrow), and lift the mating surface on the rear end of the meter panel above the fairing. Disengage the hook (marked with a dotted circle) on the side of the meter panel.

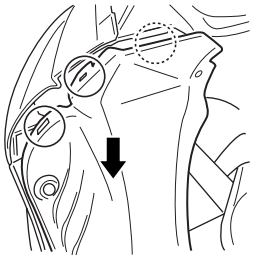

5. Pull out the meter panel toward the rear end of the motorcycle (in the direction of the arrow). In doing so, the hooks (marked with a dotted circle) also come off.

INSTALLATION

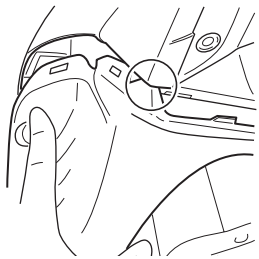

1. Install the meter panel starting from the front end portion. Lightly insert the front end of the meter panel into the central end face of the fairing (place marked with a circle) as shown in the illustration.

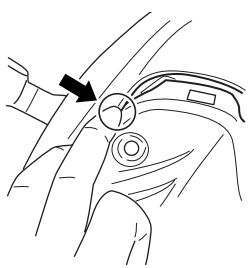

2. As the outer side of the front end of the meter panel bulges, lightly insert the place marked with a circle as well while aligning it with the hooks.

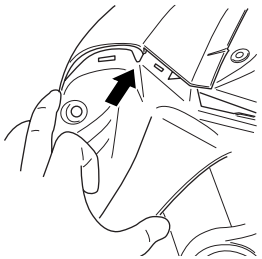

3. Push the front end of the meter panel in the direction of the arrow.

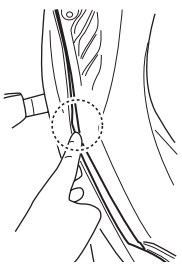

4. Fit the hooks (marked with a dotted circle) on the side of the meter panel.

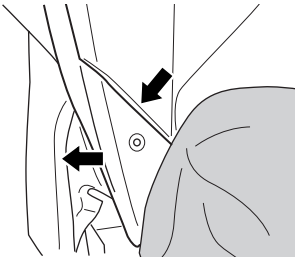

5. Lightly press the fairing toward outside of the motorcycle (in the direction of the arrow), and insert the mating surface on the rear end of the meter panel under the fairing. Check that the hooks on the outer side of the meter panel are securely engaged.

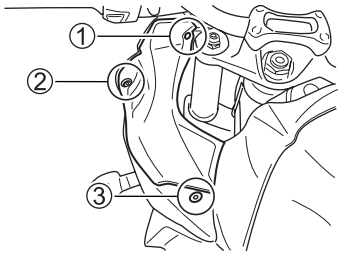

6. Tighten the fastener ① and bolt ② on the front end of the meter panel, and tighten the bolt ③ on the rear end of the meter panel in the numbered order.

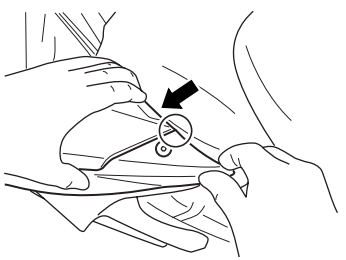

NOTE: When tightening the bolt ③ on the rear end of the meter panel, the mating condition around the meter panel can be improved by performing the work while pushing the bottom of the meter panel and the end face of the fairing (place marked with a circle) in the direction of the arrow so that they are aligned.

FAIRING REMOVAL AND INSTALLATION (GSX-S1000F/FA)

REMOVAL

1. Place the motorcycle on the side stand.

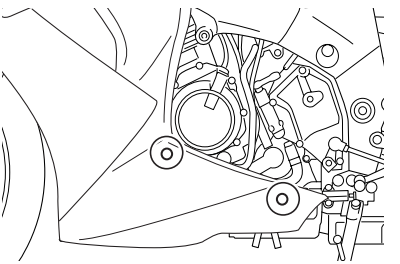

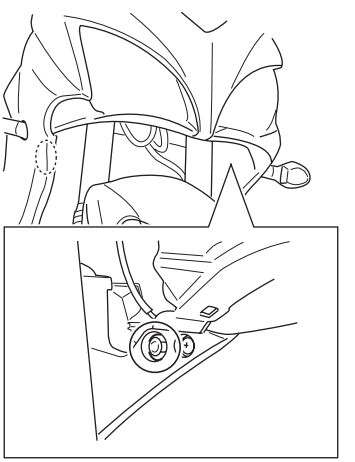

2. Remove the right and left fairing bolts and inner fairing fasteners.

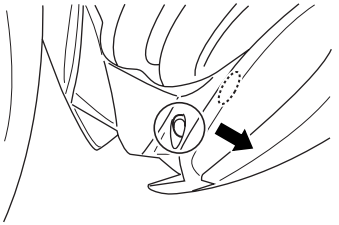

3. Remove the under fairing fastener. Unhook the hooks located at the lower part of the left-side fairing.
4. Remove the right and left meter panels by referring to the METER PANEL REMOVAL AND INSTALLATION section.

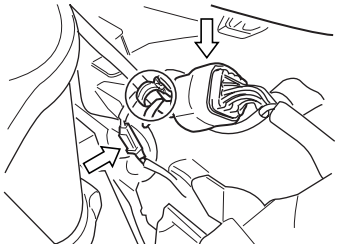

Right

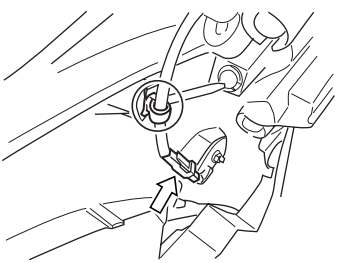

Left

5. Disengage the turn signal and meter wire harnesses from the clamp. Disconnect the right and left turn signal connectors and the right side meter coupler.

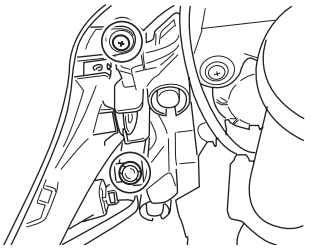

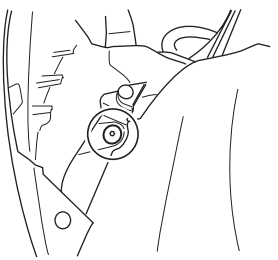

6. Remove the bolts, screws, and fasteners on the inner side of the right and left fairings.

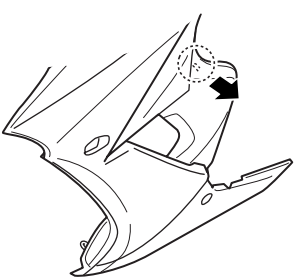

7. Remove the right and left fairings one by one. Unhook the hook on the inner side of the fairing.

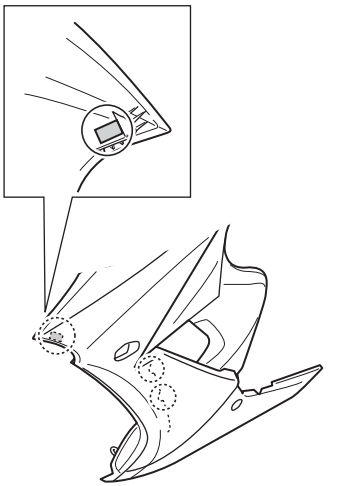

8. Unhook the hook, which is fixed on the radiator, from the bottom side of the fairing, and carefully pull out the fairing.

INSTALLATION

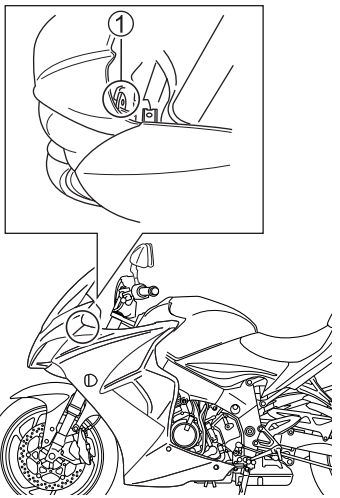

1. Align the top part ① of the fairing (Removal procedure 6. Screw Section).

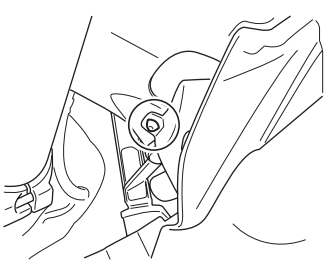

NOTE: Be careful not to allow the inner side of the fairing to touch the radiator or frame. Otherwise, the cushion on the inner side may come off.

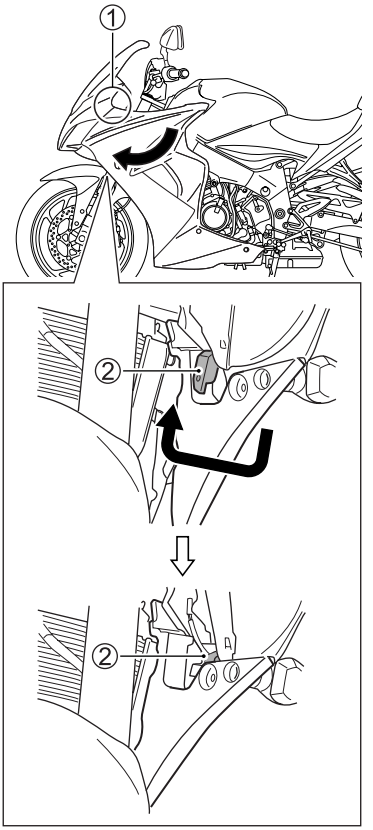

2. Move the fairing forward using the top part ① of the fairing as a rotational axis, and fit the headlight tightening seating surface ② into the notch on the inner side of the fairing.

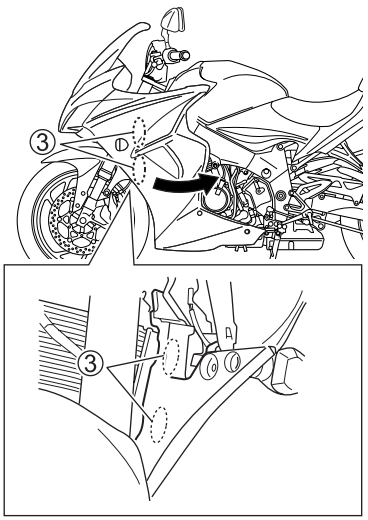

3. Lightly press the fairing toward the inner side of the motorcycle, and slide it backward to insert it into the radiator hook ③.

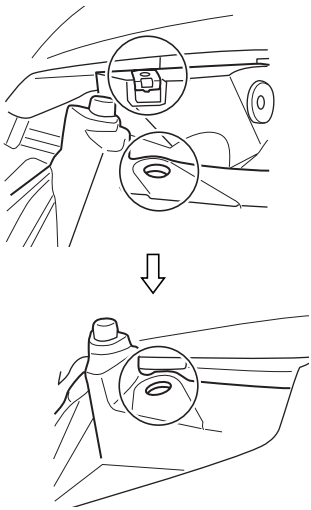

NOTE: When the insertion of the radiator hook ③ is completed, the inner side of the fairing (Removal procedure 6. Bolt Tightening Section) can be aligned.

4. After completing the insertion of the radiator hook ③, fix the fairing in the reverse order of the removal procedure.

FUEL TANK LIFT

1. Place the motorcycle on the side stand.
2. Remove the seat by referring to the SEAT LOCK AND HELMET HOLDERS section.

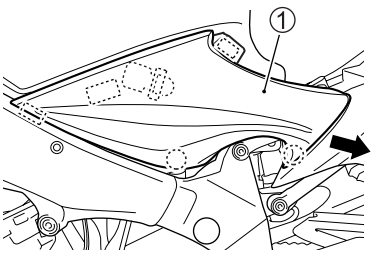

3. The right and left side frame covers have fasteners behind the cover at the places marked with rectangles. Pull up the side frame covers ① to unfasten the fasteners. The side frame covers have hooks behind the places marked with circles. Move the side frame cover ① backward to slip off the hook.

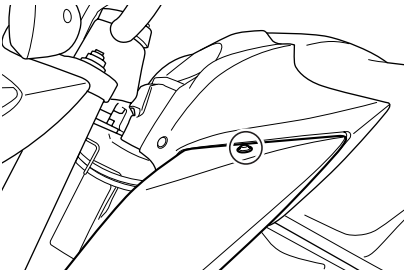

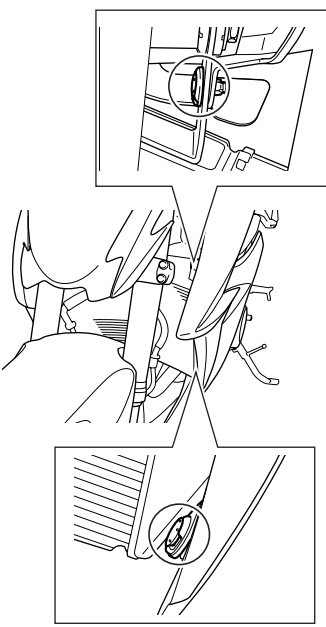

(GSX-S1000/A)

4. Remove the right and left bolts and fasteners.



(GSX-S1000/A)

5. Unhook the hooks and remove the right and left frame body covers ② by sliding the covers forward.

   (GSX-S1000F/FA)
   Remove the meter panel and fairings by referring to the METER PANEL REMOVAL AND INSTALLATION, FAIRING REMOVAL AND INSTALLATION section.

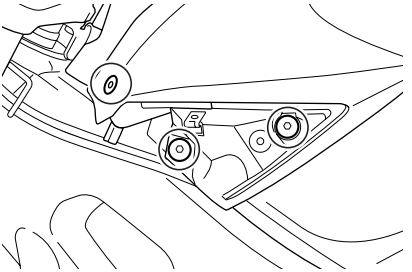

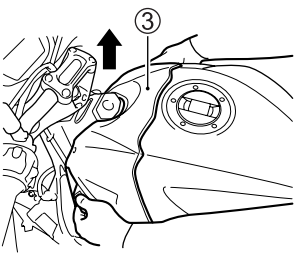

6. Remove the right and left bolts and fasteners. Pull up the fuel tank upper cover ③.

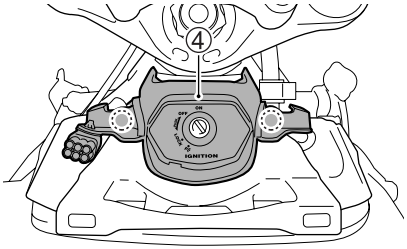

7. Unhook the hooks and remove the fuel tank lower cover assembly ④.

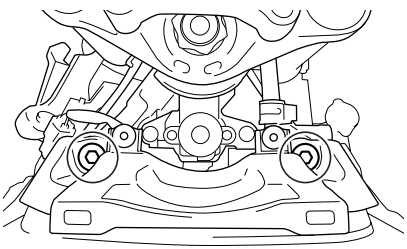

8. Remove the fuel tank fitting bolts.

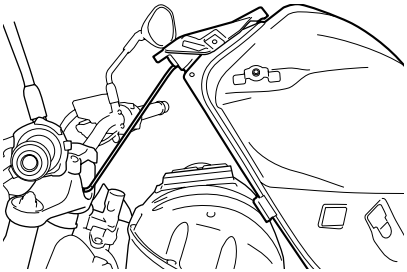

9. Lift the front end of the fuel tank and prop it up as shown above. Put the circle end of the prop stay on to the steering stem nut.

NOTE: A prop stay is available at your Suzuki dealer. The prop stay part number is 44560-23H00.

⚠ WARNING

If you lift up the fuel tank when it is full, fuel can seep out from the fuel tank cap, creating a fire hazard.

Reduce the fuel level to less than 1/4 full before lifting up the fuel tank. The fuel indicator on the instrument panel will blink or remain lit when the fuel level is less than 1/4 full.

LUBRICATION POINTS

Proper lubrication is important for smooth operation and long life of each working part of your motorcycle and also for safe riding. It is a good practice to lubricate the motorcycle after a long rough ride and after getting it wet it in the rain or after washing it. Major lubrication points are indicated below.

NOTICE

Lubricating electrical switches can damage the switches.

Do not apply grease and oil to electrical switches.

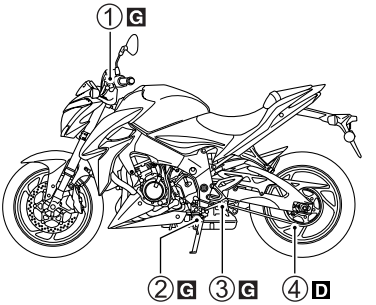

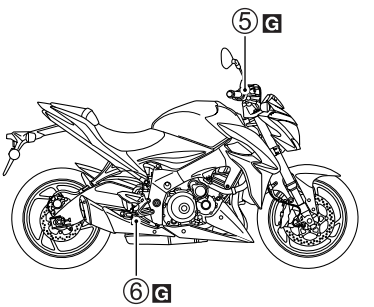

G .... Grease
D .... Drive chain lubricant

① .... Clutch lever pivot
② .... Side stand pivot and spring hook
③ .... Gearshift lever pivot and footrest pivot
④ .... Drive chain
⑤ .... Brake lever pivot
⑥ .... Brake pedal pivot and footrest pivot

BATTERY

The battery is a sealed type battery and requires no maintenance. Have your dealer check the battery's state of charge periodically.

The standard charging rate is 1.2A × 5 to 10 hours and the maximum rate is 5.0A × 1 hour. Never exceed the maximum charging rate.

⚠ WARNING

Battery posts, terminals, and related accessories contain lead and lead compounds. Lead is harmful to your health if it gets into your blood stream.

Wash hands after handling any parts containing lead.

⚠ WARNING

Diluted sulfuric acid from the battery can cause blindness or severe burns.

When working near the battery, use proper eye protection and gloves. Flush eyes or body with ample water and get medical care immediately if you suffer injury. Keep batteries out of reach of children.

⚠ WARNING

Batteries produce flammable hydrogen gas which can explode if exposed to flames or sparks.

Keep flames and sparks away from the battery. Never smoke when working near the battery.

NOTICE

Exceeding the maximum charging rate for the battery can shorten its life.

Never exceed the maximum charging rate for the battery.

⚠ WARNING

Wiping the battery with a dry cloth can cause a static electricity spark, which can start a fire.

Wipe the battery with a damp cloth to avoid static electricity build up.

BATTERY REMOVAL

To remove the battery, follow the procedure below:

1. Place the motorcycle on the side stand.
2. Remove the front seat by referring to the SEAT LOCK AND HELMET HOLDERS section.

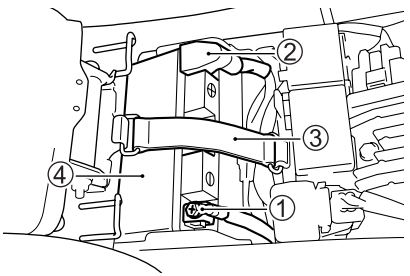

3. Disconnect the negative (–) terminal ①.
4. Remove the cap. Disconnect the positive (+) terminal ②.
5. Remove the band ③.
6. Remove the battery ④.

To install the battery:

1. Install the battery in the reverse order of removal.
2. Connect the battery terminals securely.

NOTICE

Reversing the battery lead wires can damage the charging system and the battery.

Always attach the red lead to the (+) positive terminal and the black (or black with white tracer) lead to the (–) negative terminal.

⚠ WARNING

Batteries contain toxic substances including sulfuric acid and lead. They could cause injury to humans or could damage the environment.

A used battery must be disposed of or recycled according to local law and must not be discarded with ordinary household waste. Make sure not to tip over the battery when you remove it from the vehicle. Otherwise, sulfuric acid could run out and you might be injured.

NOTE:

- *Select the same type MF battery when replacing the battery.*
- *Recharge the battery once a month if the motorcycle is not used for a long time.*

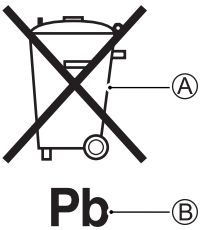

The crossed-out wheeled bin symbol Ⓐ located on the battery label indicates that a used battery should be collected separately from ordinary household waste.
The chemical symbol of “Pb” Ⓑ indicates the battery contains more than 0.004% lead.

By ensuring the used battery is disposed of or recycled correctly, you will help prevent potential negative consequences for the environment and human health, which could otherwise be caused by inappropriate waste handling of the battery. The recycling of materials will help to conserve natural resources. For more detailed information about disposing or recycling of the used battery, consult your Suzuki dealer.

AIR CLEANER

If the elements have become clogged with dust, intake resistance will increase with a resultant decrease in power output and an increase in fuel consumption. If you use your motorcycle under normal low-stress conditions, you should service the air cleaner at the intervals specified. If you ride in dusty, wet or muddy conditions, you will need to inspect the air cleaner element much more frequently. Use the following procedure to remove the element and inspect it.

⚠ WARNING

Operating the engine without the air cleaner element in place can be hazardous. A flame can spit back from the engine to the air intake box without the air cleaner element to stop it. Severe engine damage can also occur if dirt enters the engine due to running the engine without the air cleaner element.

Never run the engine without the air cleaner element in place.

NOTICE

Failure to inspect the air cleaner element frequently if the vehicle is used in dusty, wet, or muddy conditions can damage your motorcycle. The air cleaner element can become clogged under these conditions, and engine damage may result.

Always inspect the air cleaner element after riding in severe conditions. Replace the element as necessary. If water gets in the air cleaner case, immediately clean the element and the inside of the case.

REMOVAL

1. Lift the fuel tank by referring to the FUEL TANK LIFT section.

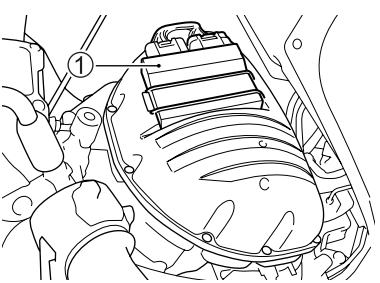

2. Remove the band. Remove the ECM ① from the air cleaner cap.

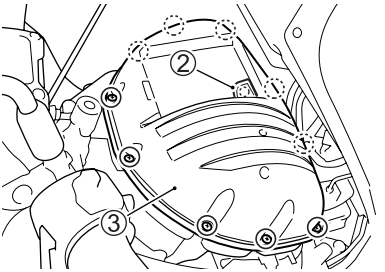

3. Remove the air cleaner cap plug ②. Remove the 11 screws. Remove the air cleaner cap ③.

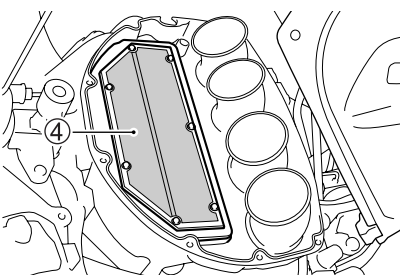

4. Remove the air cleaner element ④.

INSPECTION

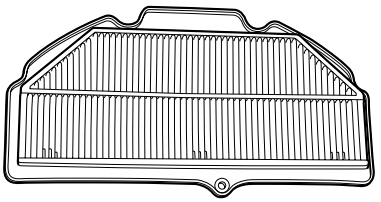

Inspect the air cleaner element condition. Replace the air cleaner element periodically.

NOTICE

Compressed air can damage the air cleaner element.

Do not blow the air cleaner element with compressed air.



Remove the plug and drain water and oil at the periodic maintenance interval. The air cleaner drain plug is located beneath the air cleaner box.

INSTALLATION

Reinstall the inspected element or new one in reverse order of removal. Be absolutely sure that the element is securely in position and is sealing properly.

NOTICE

A torn air cleaner element will allow dirt to enter the engine and can damage the engine.

Replace the air cleaner element with a new one if it is torn. Carefully examine the air cleaner element for tears during cleaning.

NOTICE

Failure to position the air cleaner element properly can allow dirt to bypass the air cleaner element. This will cause engine damage.

Be sure to properly install the air cleaner element.

NOTE: Be careful not to spray water on the air cleaner box when cleaning the motorcycle.

Reinstall the fuel tank.

NOTE: Check that the fuel tank drain hose and breather hose are not bent before reinstalling the fuel tank.

FUEL HOSE

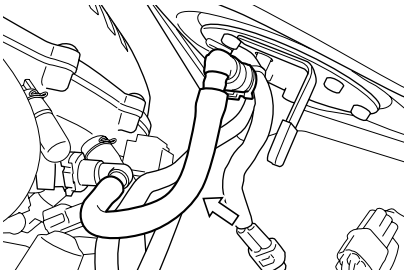

Inspect the fuel hose for damage and fuel leakage. If any defects are found, the fuel hose must be replaced.

NOTE: Be sure to check the fuel pump lead wire when reconnecting the fuel hose after disconnecting it.

ENGINE OIL

Long engine life depends much on the selection of a quality oil and the periodic changing of the oil. Daily oil level checks and periodic changes are two of the most important maintenance items to be performed.

ENGINE OIL LEVEL CHECK

Follow the procedure below to inspect the engine oil level.

1. Place the motorcycle on level ground on the side stand.
2. Start the engine and run it for three minutes.
3. Stop the engine and wait three minutes.

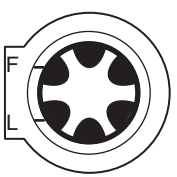

4. Hold the motorcycle vertically and inspect the engine oil level through the engine oil level inspection window on the right side of the engine.

NOTICE

Operating the motorcycle with too little or too much oil can damage the engine.

Place the motorcycle on level ground. Check the oil level with the engine oil inspection window before each use of the vehicle. Be sure the engine oil level is always above the "L" (low) line and not higher than the "F" (full) line.

ENGINE OIL AND FILTER CHANGE

Change the engine oil and oil filter at the scheduled time. The oil should be changed when the engine is warm so that the oil will drain thoroughly from the engine. The procedure is as follows:

1. Place the motorcycle on the side stand.

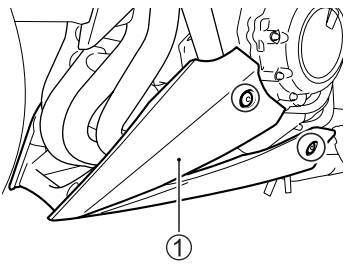

(GSX-S1000/A)

2. Remove the right and left bolts. Remove the under cowlings ①.

   (GSX-S1000F/FA)
   Remove the meter panel and fairings by referring to the METER PANEL REMOVAL AND INSTALLATION, FAIRING REMOVAL AND INSTALLATION section.



3. Remove the oil filler cap ②.

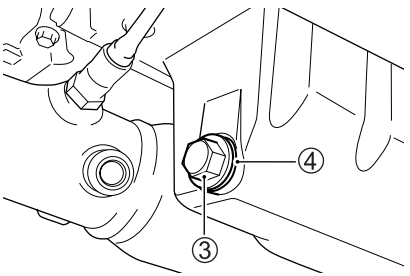

4. Remove the drain plug ③ and gasket ④ from the bottom of the engine and drain the engine oil into a drain pan.

⚠ CAUTION

Hot engine oil and exhaust pipes can burn you.

Wait until the oil drain plug and exhaust pipes are cool enough to touch with bare hands before draining oil.

⚠ WARNING

Children and pets may be harmed by swallowing new or used oil. Repeated, prolonged contact with used engine oil may cause skin cancer. Brief contact with oil may irritate skin.

Keep new and used oil and used oil filters away from children and pets. To minimize your exposure to used oil, wear a long-sleeve shirt and moisture-proof gloves (such as dishwashing gloves) when changing oil. If oil contacts your skin, wash thoroughly with soap and water. Launder any clothing or rags if wet with oil. Recycle or properly dispose of used oil and filters.

NOTE: Recycle or properly dispose of used oil.

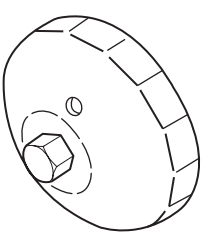

Available from Suzuki dealer
Oil filter wrench (Part No. 09915-40620)

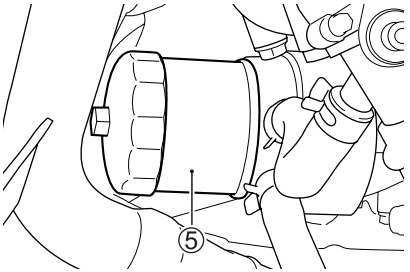

5. Turn the oil filter ⑤ counterclockwise and remove it with a Suzuki “cap type” oil filter wrench or a “strap type” filter wrench of the proper size.

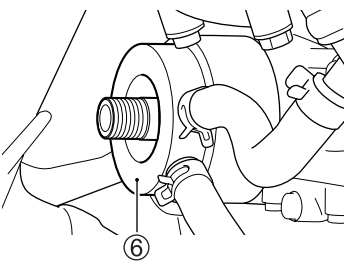

6. Wipe off the mounting surface ⑥ on the engine where the new filter will be seated with a clean rag.

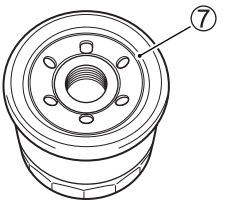

7. Smear a little engine oil around the rubber gasket ⑦ of the new oil filter.
8. Screw the new filter by hand until the filter gasket contacts the mounting surface (a small resistance will be felt).

NOTICE

Failure to use an oil filter with the correct design and thread specifications can damage your motorcycle’s engine.

Be sure to use a genuine Suzuki oil filter or an equivalent one designed for your motorcycle.

NOTE: To tighten the oil filter properly, it is important to accurately identify the position at which the filter gasket first contacts the mounting surface.

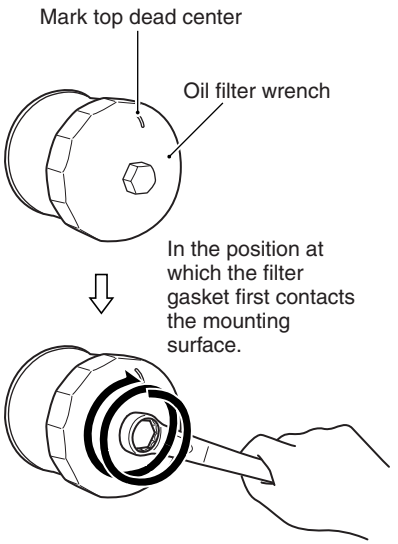

Tighten the filter 2 turns or to specified torque.

9. Mark the top dead center position on the “cap type” filter wrench or on the oil filter. Use an oil filter wrench to tighten the filter 2 turns or to specified torque.

Oil filter tightening torque:
20 N·m (2.0 kgf-m, 14.5 lbf-ft)

10. Replace the drain plug gasket with a new one. Reinstall the drain plug and gasket. Tighten the plug securely with a torque wrench. Pour 3200 ml (3.4/2.8 US/Imp. qt) of new engine oil through the filler hole and install the filler cap. Be sure to always use the specified engine oil described in the FUEL, ENGINE OIL AND COOLANT RECOMMENDATIONS section.

Drain plug tightening torque:
23 N·m (2.3 kgf-m, 16.5 lbf-ft)

NOTE: About 2800 ml (3.0/2.5 US/Imp. qt) of oil will be required when changing oil only.

NOTICE

Engine damage may occur if you use oil that does not meet Suzuki’s specifications.

Be sure to use the oil specified in the FUEL, ENGINE OIL AND COOLANT RECOMMENDATIONS section.

11. Start the engine (while the motorcycle is outside on level ground) and allow it to idle for three minutes.
12. Turn the engine off and wait approximately three minutes. Recheck the oil level on the engine oil inspection window while holding the motorcycle vertically. If it is lower than the “L” mark, add oil until the oil level is between “L” mark and “F” mark. Inspect the area around the drain plug and oil filter for leaks.

NOTE: If you do not have a proper oil filter wrench, have your Suzuki dealer perform this service.

ENGINE IDLE SPEED INSPECTION

Inspect the engine idle speed. The engine idle speed should be 1050 – 1250 r/min when the engine is warm.

NOTE: If the engine idle speed is not within the specified range, ask your Suzuki dealer or a qualified mechanic to inspect and repair the motorcycle.

THROTTLE CABLE ADJUSTMENT

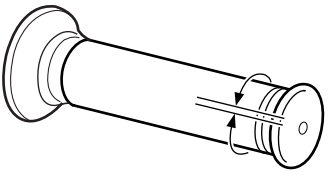

2.0 – 4.0 mm
(0.08 – 0.16 in)

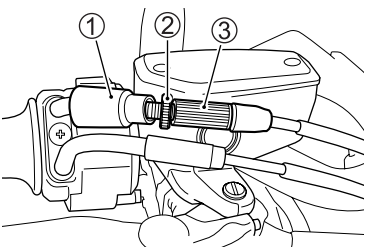

To adjust the cable play:
1. Remove the boot ①.
2. Loosen the lock nut ②.
3. Turn the adjuster ③ so that the throttle grip has 2.0 – 4.0 mm (0.08 – 0.16 in) play.
4. Tighten the lock nut ②.
5. Reinstall the boot ①.

⚠ WARNING

Inadequate throttle cable play can cause engine speed to rise suddenly when you turn the handlebars. This can lead to loss of control and an accident.

Adjust the throttle cable play so that engine idle speed does not rise due to handlebar movement.

THROTTLE CABLE BOOTS

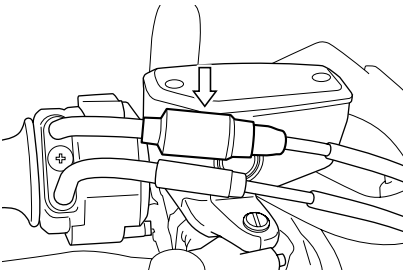

The throttle cable has a boots. Check that the boots are fit securely. Do not apply water directly to the boots when washing. Wipe off dirt from the boots with a wet cloth when the boots are dirty.

CLUTCH

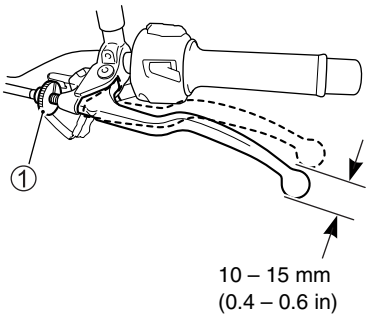

At each maintenance interval, adjust the clutch cable play with the clutch cable adjuster. The cable play should be 10 – 15 mm (0.4 – 0.6 in) as measured at the clutch lever end before the clutch begins to disengage. If you find that the amount of clutch cable play is incorrect, adjust it in the following way:

1. Turn the clutch lever adjuster ① clockwise as far as it will go.

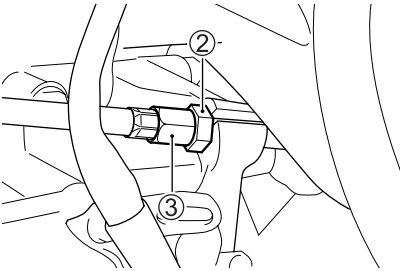

2. Loosen the cable adjuster lock nut ②, and turn the cable adjuster ③ to obtain approximately 10 – 15 mm (0.4 – 0.6 in) of free play at the clutch lever end as indicated.
3. Minor adjustment can now be made with the adjuster ①.
4. Tighten the lock nut ② after finishing adjustment.

NOTE: Any maintenance of the clutch other than the clutch cable play should be performed by your Suzuki dealer.

COOLANT
COOLANT LEVEL

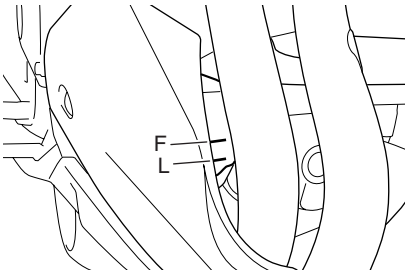

(GSX-S1000/A)

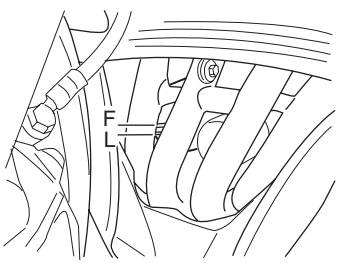

(GSX-S1000F/FA)

The coolant should be kept between the “F” (FULL) and “L” (LOW) level lines in the reservoir tank at all times. Inspect the level every time before riding with the motorcycle held vertically. If the coolant is found lower than the “L” level line, add specified engine coolant in the following way:

NOTE:

- *Check the coolant level when the engine is cold.*
- *If the engine coolant reservoir is empty, check the radiator coolant level.*

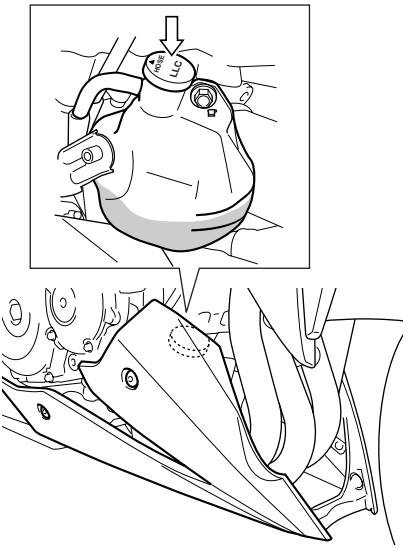

(GSX-S1000/A)

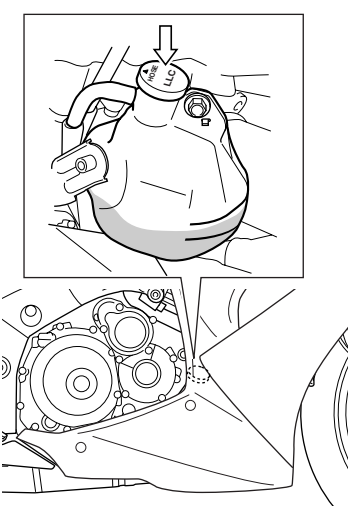

(GSX-S1000F/FA)

(GSX-S1000F/FA)
Remove the meter panel and fairings by referring to the METER PANEL REMOVAL AND INSTALLATION, FAIRING REMOVAL AND INSTALLATION section.

Remove the filler cap and add specified engine coolant through the filler hole until it reaches the "F" line. Refer to the FUEL, ENGINE OIL AND COOLANT RECOMMENDATIONS section.

NOTE: When installing the filler cap, face the triangle mark to the reservoir tank hose side.

⚠ WARNING

Engine coolant is harmful or fatal if swallowed or inhaled. Solution can be poisonous to animals.

Do not drink antifreeze or coolant solution. If swallowed, do not induce vomiting. Immediately contact a poison control center or a physician. Avoid inhaling mist or hot vapors; if inhaled, remove to fresh air. If coolant gets in eyes, flush eyes with water and seek medical attention. Wash thoroughly after handling. Keep out of the reach of children and animals.

NOTE: Adding only water will dilute the engine coolant and reduce its effectiveness. Add specified engine coolant.

CHANGING THE COOLANT
Change the coolant periodically.

NOTE: About 2800 ml (6.0/5.0 US/ Imp. qt) of coolant will required when filling the radiator and reservoir tank.

RADIATOR HOSE INSPECTION
Inspect the radiator hoses for cracks, damage or engine coolant leakage. If any defects are found, ask your Suzuki dealer to replace the radiator hose with a new one.

DRIVE CHAIN

This motorcycle has a master link type drive chain. We recommend that you take your motorcycle to an authorized Suzuki dealer or a qualified mechanic if the drive chain needs to be replaced.

The condition and adjustment of the drive chain should be checked each day before you ride. Always follow the guidelines for inspecting and servicing the chain.

⚠ WARNING

Riding with the chain in poor condition or improperly adjusted can lead to an accident.

Inspect, adjust, and maintain the chain properly before each ride, according to the instructions in this section.

Inspecting the Drive Chain

When inspecting the chain, look for the following:

- Loose pins
- Damaged rollers
- Dry or rusted links
- Kinked or binding links
- Excessive wear
- Improper chain adjustment

If you find anything wrong with the drive chain condition or adjustment, correct the problem if you know how. If necessary, consult your authorized Suzuki dealer or a qualified mechanic.

Damage to the drive chain means that the sprockets may also be damaged. Inspect the sprockets for the following:

- Excessively worn teeth
- Broken or damaged teeth
- Loose sprocket mounting nuts

If you find any of these problems with your sprocket, consult your Suzuki dealer or a qualified mechanic.

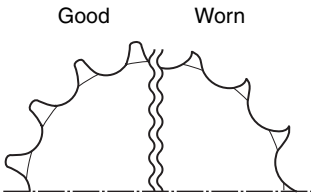

NOTE: The two sprockets should be inspected for wear when a new chain is installed and replace them if necessary.

⚠ WARNING

Improperly installing a replacement chain, or using a joint-clip type chain, can be hazardous. An incompletely riveted master link, or a joint-clip type master link, may come apart and cause an accident or severe engine damage.

Do not use a joint-clip type chain. Chain replacement requires a special riveting tool and a high-quality, non-joint-clip type chain. Ask an authorized Suzuki dealer or a qualified mechanic to perform this work.

DRIVE CHAIN CLEANING AND OILING

1. Remove dirt and dust from the drive chain. Be careful not to damage the seal ring.
2. Clean the drive chain with a sealed drive chain cleaner, or water and neutral detergent.

NOTICE

Cleaning the drive chain improperly can damage seal rings and ruin the drive chain.

- **Do not use a volatile solvent such as paint thinner, kerosene and gasoline.**
- **Do not use a high pressure cleaner to clean the drive chain.**
- **Do not use a wire brush to clean the drive chain.**

3. Use a soft brush to clean the drive chain. Be careful not to damage the seal ring even though using a soft brush.
4. Wipe off water and neutral detergent.
5. Lubricate with a motorcycle sealed drive chain lubricant or high viscosity oil (#80 – 90).

NOTICE

Some drive chain lubricant contains solvents and additives which could damage the seal rings in the drive chain.

Use sealed drive chain lubricant which is specifically intended for use with sealed drive chains.

6. Lubricate both front and back plates of the drive chain.
7. Wipe off excess lubricant after lubricating all around the drive chain.

DRIVE CHAIN ADJUSTMENT

Adjust the drive chain slack to the proper specification. The chain may require more frequent adjustments than indicated in the periodic maintenance schedule depending upon your riding conditions.

⚠ WARNING

Too much chain slack can cause the chain to come off the sprockets, resulting in an accident or serious damage to the motorcycle.

Inspect and adjust the drive chain slack before each use.

To adjust the drive chain, follow the procedure below:

⚠ CAUTION

A hot muffler can burn you. The muffler will be hot enough to burn you for some time after stopping the engine.

Wait until the muffler cools before adjusting the drive chain.

1. Place the motorcycle on the side stand.

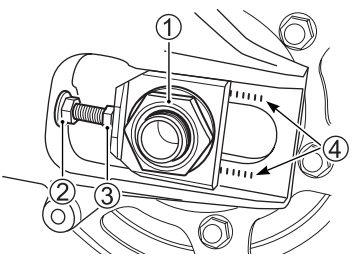

2. Loosen the axle nut ①.
3. Loosen the right and left lock nuts ②.

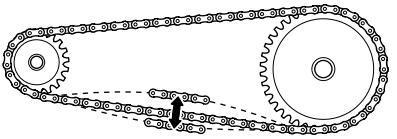

20 – 30 mm
(0.8 – 1.2 in)

4. Adjust the drive chain slack by turning the right and left chain adjuster bolts ③. At the same time that the chain is being adjusted, the rear sprocket must be kept in perfect alignment with the front sprocket. To assist you in performing this procedure, there are reference marks ④ on the swingarm and each chain adjuster which are to be aligned with each other and to be used as a reference from one side to the other.
5. Tighten the right and left lock nuts ②.
6. Tighten the axle nut ① securely.
7. Recheck the chain slack after tightening and readjust if necessary.

Rear axle nut tightening torque:
100 N·m (10.0 kgf-m, 72.5 lbf-ft)

NOTE: Do not adjust the drive chain beyond the adjustable range ④. Replace the drive chain before the drive chain exceeds the limit.

BRAKES

This motorcycle utilizes front and rear disk brakes. Proper operation of brake systems are vital to safe riding. Be sure to perform the brake inspection as scheduled.

BRAKE SYSTEM

⚠ WARNING

Failure to properly inspect and maintain your motorcycle's brake systems can increase your chance of having an accident.

Be sure to inspect the brakes before each use according to the INSPECTION BEFORE RIDING section. Always maintain your brakes according to the MAINTENANCE SCHEDULE.

Inspect your brake system for the following items daily:

- Inspect the fluid level in the reservoirs.
- Inspect the front and rear brake system for signs of fluid leakage.
- Inspect the brake hose for leakage or a cracked appearance.
- The brake lever and pedal should have the proper stroke and be firm at all times.
- Check the wear of the disk brake pads.

BRAKE HOSE INSPECTION

Inspect the brake hoses and hose joints for cracks, damage or brake fluid leakage. If any defects are found, ask your Suzuki dealer to replace the brake hose with a new one.

BRAKE FLUID

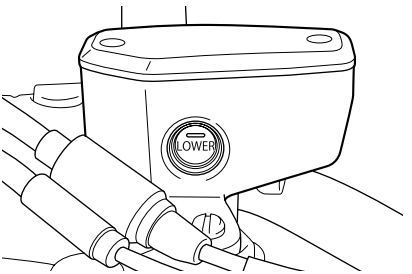

FRONT

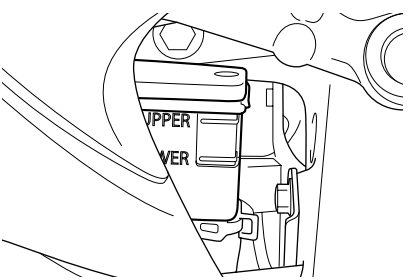

REAR

Check the brake fluid level in both the front and rear brake fluid reservoirs. If the level in either reservoir is below the lower mark, inspect for brake pad wear and leaks.

⚠ WARNING

Brake fluid will gradually absorb moisture through the brake hoses. Brake fluid with high water content lowers the boiling point and can cause brake system (including ABS) malfunction due to corrosion of brake components. Boiling brake fluid or brake system (including ABS) malfunction could result in an accident.

Replace the brake fluid every two years to maintain braking performance.

⚠ WARNING

The use of any fluid except DOT4 brake fluid from a sealed container can damage the brake system and lead to an accident.

Clean filler cap before removing. Use only DOT4 brake fluid from a sealed container. Never use or mix with different types of brake fluid.

⚠ WARNING

Brake fluid is harmful or fatal if swallowed, and harmful if it comes in contact with skin or eyes. Solution can be poisonous to animals.

If brake fluid is swallowed, do not induce vomiting. Immediately contact a poison control center or a physician. If brake fluid gets in eyes, flush eyes with water and seek medical attention. Wash thoroughly after handling. Keep out of the reach of children and animals.

NOTICE

Spilled brake fluid can damage painted surfaces and plastic parts.

Be careful not to spill any fluid when filling the brake fluid reservoir. Wipe spilled fluid up immediately.

BRAKE PAD

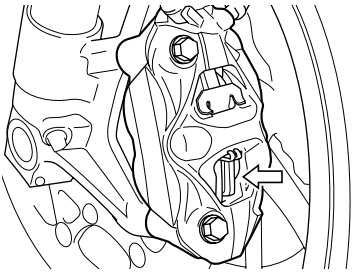

FRONT

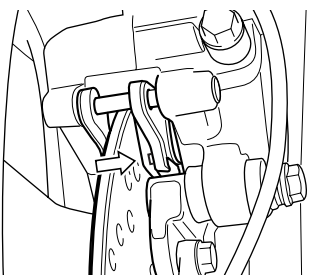

REAR

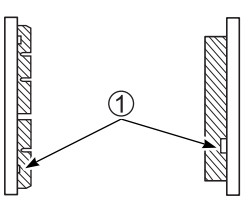

Inspect the front and rear brake pads by noting whether or not the friction pads are worn down to the grooved wear limit line ①. If a front or rear pad is worn to the grooved wear limit line, both front or both rear pads must be replaced with new ones by your authorized Suzuki dealer or a qualified service mechanic.

⚠ WARNING

Failure to inspect and maintain the brake pads and replace them when recommended can increase your chance of having an accident.

If you need to replace brake pads, have your Suzuki dealer do this work. Inspect and maintain the brake pads as recommended.

⚠ WARNING

If you ride this motorcycle after brake system repair or brake pad replacement without pumping the brake lever/pedal, you may get poor braking performance which could result in an accident.

After brake system repair or brake pad replacement, pump the brake lever/pedal several times until brake pads are pressed against the brake disks and proper lever/pedal stroke and firm feel are restored.

NOTE: Do not squeeze/depress the brake lever/pedal when the pads are not in their positions. It is difficult to push the pistons back and brake fluid leakage may result.

⚠ WARNING

Replacing only one of the two brake pads can result in uneven braking action and can increase your chance of having an accident.

Always replace both pads together.

REAR BRAKE PEDAL POSITION

The rear brake pedal position must be properly adjusted at all times or the disk brake pads will rub against the disk causing damage to the pads and to the disk surface.

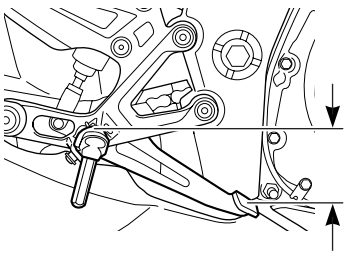

50 – 60 mm
(2.0 – 2.4 in)

Check that the rear brake pedal is 50 – 60 mm (2.0 – 2.4 in) below the top face of the footrest.

NOTE: If the rear brake pedal position is incorrect, ask your Suzuki dealer to adjust the brake pedal position because this adjustment requires tightening torque control.

NOTICE

An incorrectly adjusted brake pedal may force brake pads to continuously rub against the disk, causing damage to the pads and disk.

Follow the steps in this section to adjust the brake pedal properly.

REAR BRAKE LIGHT SWITCH

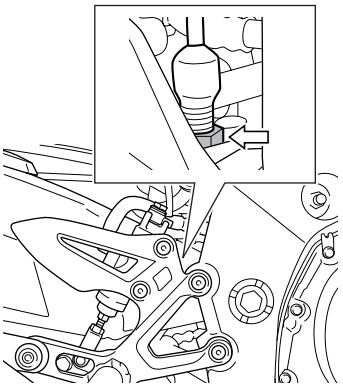

To adjust the brake light switch, hold the switch body and turn the adjuster so that the brake light will come on just before a pressure rise is felt when the brake pedal is depressed.

TIRES

⚠ WARNING

The tires on your motorcycle form the crucial link between your motorcycle and the road. Failure to take the precautions below may result in an accident due to tire failure.

- **Check tire condition and pressure before each ride, and adjust pressure if necessary.**
- **Avoid overloading your motorcycle.**
- **Replace a tire when worn to the specified limit, or if you find damage such as cuts or cracks.**
- **Always use the size and type of tires specified in this owner's manual.**
- **Balance the wheel after tire installation.**
- **Read this section of the owner's manual carefully.**

⚠ WARNING

Failure to perform break-in of the tires could cause tire slip and loss of control, which could result in an accident.

Use extra care when riding on new tires. Perform proper break-in of the tires referring to the BREAK-IN section of this manual and avoid hard acceleration, hard cornering, and hard braking for the first 160 km (100 miles).

TIRE PRESSURE AND LOADING

Proper tire pressure and proper tire loading are important factors. Overloading your tires can lead to tire failure and loss of vehicle control.

Check tire pressure each day before you ride, and be sure the pressure is correct for the vehicle load according to the table below. Tire pressure should only be checked and adjusted before riding, since riding will heat up the tires and lead to higher inflation pressure readings.

Under-inflated tires make smooth cornering difficult, and can result in rapid tire wear. Over-inflated tires cause a smaller amount of tire to be in contact with the road, which can contribute to skidding and loss of control.

Cold Tire Inflation Pressure

LOAD / TIRE	SOLO RIDING	DUAL RIDING
FRONT	250 kPa 2.50 kgf/cm^2 36 psi	250 kPa 2.50 kgf/cm^2 36 psi
REAR	290 kPa 2.90 kgf/cm^2 42 psi	290 kPa 2.90 kgf/cm^2 42 psi

NOTE: When you detect drops in tire pressure, check the tire for nails or other punctures, or a damaged wheel rim. Tubeless tires sometimes lose pressure gradually when punctured.

TIRE CONDITION AND TYPE

Proper tire condition and proper tire type affect vehicle performance. Cuts or cracks in the tires can lead to tire failure and loss of vehicle control. Worn tires are susceptible to puncture failures and subsequent loss of vehicle control. Tire wear also affects the tire profile, changing vehicle handling characteristics.

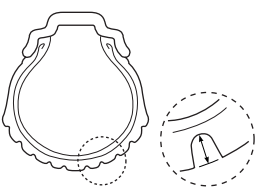

Check the condition of your tires each day before you ride. Replace tires if tires show visual evidence of damage, such as cracks or cuts, or if tread depth is less than 1.6 mm (0.06 in) front, 2.0 mm (0.08 in) rear.

NOTE: These wear limits will be reached before the wear bars molded into the tire make contact with the road.

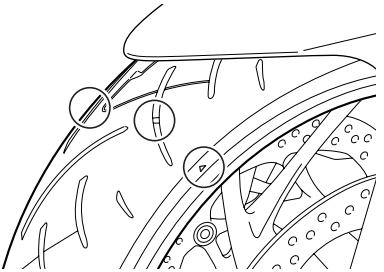

NOTE: The " △ " mark indicates the place where the wear bars are molded into the tire. When the wear bars contact the road, it indicates that the tire wear limit has been reached.

When you replace a tire, be sure to replace it with a tire of the size and type listed below. If you use a different size or type of tire, vehicle handling may be adversely affected, possibly resulting in loss of vehicle control.

	FRONT	REAR
SIZE	120/70ZR17M/C (58W)	190/50ZR17M/C (73W)
TYPE	DUNLOP D214F M	DUNLOP D214 M

Be sure to balance the wheel after repairing a puncture or replacing the tire. Proper wheel balance is important to avoid variable wheel-to-road contact, and to avoid uneven tire wear.

⚠ WARNING

An improperly repaired, installed, or balanced tire can cause loss of control and an accident, or can wear out sooner.

- **Ask your Suzuki dealer or a qualified mechanic to perform tire repair, replacement, and balancing because proper tools and experience are required.**
- **Install tires according to the rotation direction shown by arrows on the sidewall of each tire.**

⚠ WARNING

Failure to follow the instructions below for tubeless tires may result in an accident due to tire failure. Tubeless tires require different service procedures than tube tires.

- **Tubeless tires require an airtight seal between the tire bead and wheel rim. Special tire irons and rim protectors or a specialized tire mounting machine must be used for removing and installing tires to prevent tire or rim damage which could result in an air leak.**
- **Repair punctures in tubeless tires by removing the tire and applying an internal patch.**
- **Do not use an external repair plug to repair a puncture since the plug may work loose as a result of the cornering forces experienced by a motorcycle tire.**
- **After repairing a tire, do not exceed 80 km/h (50 mph) for the first 24 hours, and do not exceed 130 km/h (80 mph) thereafter. This is to avoid excessive heat build-up which could result in a tire repair failure and tire deflation.**
- **Replace the tire if it is punctured in the sidewall area, or if a puncture in the tread area is larger than 6 mm (3/16 in). These punctures cannot be repaired adequately.**

SIDE STAND/IGNITION INTERLOCK SYSTEM

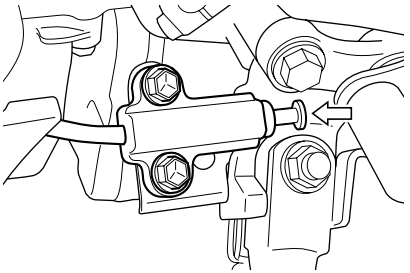

Check the side stand/ignition interlock system for proper operation as follows:

1. Sit on the motorcycle in the normal riding position, with the side stand up.
2. Shift into first gear, hold the clutch in, and start the engine.
3. While continuing to hold the clutch in, move the side stand to the down position.

If the engine stops running when the side stand is moved to the down position, then the side stand/ignition interlock system is working properly. If the engine continues to run with the side stand down and the transmission in gear, then the side stand/ignition interlock system is not working properly. Have your motorcycle inspected by an authorized Suzuki dealer or a qualified service mechanic.

⚠ WARNING

If the side stand/ignition interlock system is not working properly, it is possible to ride the motorcycle with the side stand in the down position. This may interfere with rider control during a left turn and could cause an accident.

Check the side stand/ignition interlock system for proper operation before riding. Check that the side stand is returned to its full up position before starting off.

FRONT WHEEL REMOVAL

1. Place the motorcycle on the side stand.

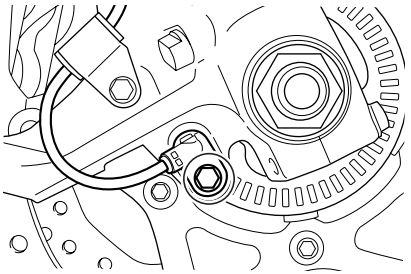

2. Remove the front wheel speed sensor by removing the mounting bolt.

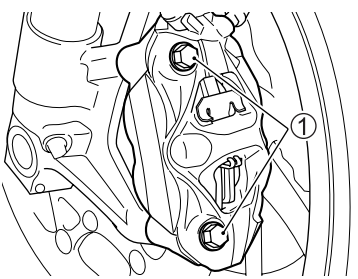

3. Remove both brake calipers from the front forks by removing 2 mounting bolts ① on each of the calipers.

NOTE: Never squeeze the front brake lever with the caliper removed. It is very difficult to force the pads back into the caliper assembly and brake fluid leakage may result.

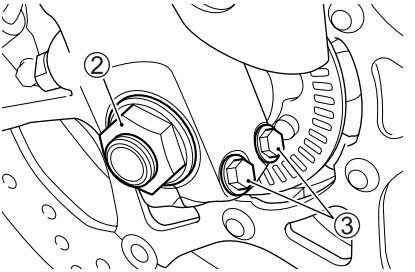

4. Remove the nut ②.
5. Loosen the axle holder bolts ③.

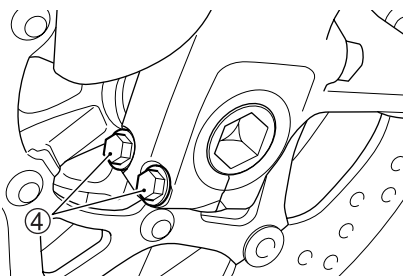

6. Loosen the axle holder bolts ④.
7. Place an accessory service stand or equivalent under the swingarm to help stabilize the rear end.
8. Carefully position a jack under the exhaust pipe and raise until the front wheel is slightly off the ground.

NOTICE

Improper jacking may cause damage to the fairing or oil filter.

Do not place the jack under the lower part of the fairing or the oil filter when jacking up the motorcycle.

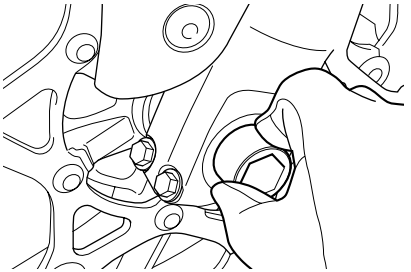

9. Draw out the axle shaft.

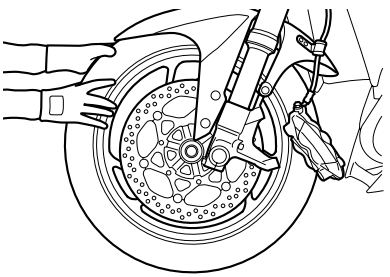

10. Slide the front wheel forward.
11. Put the new wheel in place and insert the axle shaft.
12. Remove the jack and service stand.

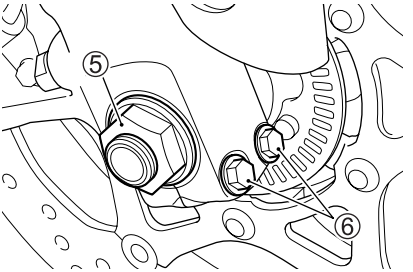

13. Hold the shaft and tighten the bolt ⑤ to the specified torque.
14. Tighten the axle holder bolts ⑥ to the specified torque.
15. Move the steering up and down several times to seat the axle shaft.

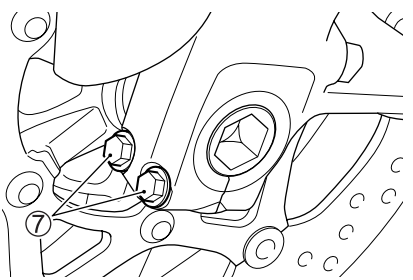

16. Tighten the axle holder bolts ⑦ to the specified torque.
17. Reinstall the brake calipers.
18. After installing the wheel, apply the brake several times to restore the proper lever stroke.

⚠ WARNING

Failure to extend brake pads after installing the wheel can cause poor braking performance and may result in an accident.

Before riding, "pump" the brake lever repeatedly until the brake pads are pressed against the brake disks and proper lever stroke and firm feel are restored. Also check that the wheel rotates freely.

⚠ WARNING

Installing the front wheel in the reverse direction can be hazardous. The tire for this motorcycle is directional. Therefore, the motorcycle may have unusual handling if the wheel is installed incorrectly.

Install the front wheel so that the tire rotates in the specified direction, as indicated by the arrow on the sidewall of the tire.

⚠ WARNING

If the bolts and nuts are not properly tightened, the wheel can come off, causing an accident.

Be sure to tighten the bolts and nuts to the specified torque. If you do not have a torque wrench or do not know how to use one, ask your authorized Suzuki dealer to check the bolts and nuts.

Front axle tightening torque:
100 N·m (10.0 kgf-m, 72.5 lbf-ft)

Front axle holder bolt
tightening torque:
23 N·m (2.3 kgf-m, 16.5 lbf-ft)

Front brake caliper mounting bolt
tightening torque:
39 N·m (3.9 kgf-m, 28.0 lbf-ft)

REAR WHEEL REMOVAL

⚠ CAUTION

A hot muffler can burn you.

Wait until the muffler cools before removing the axle nut.

NOTICE

Removing the rear wheel without use of an accessory stand can result in your motorcycle falling over and being damaged.

Do not attempt roadside removal of the rear wheel. Only remove the rear wheel at a properly equipped servicing facility using an accessory service stand.

1. Place the motorcycle on the side stand.

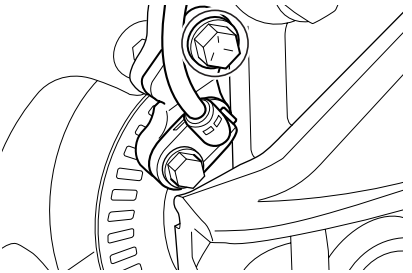

2. Remove the rear wheel speed sensor bracket by removing the mounting bolt.

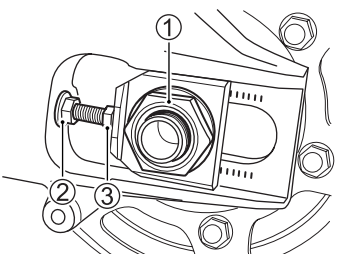

3. Remove the axle nut ①.
4. Place an accessory service stand or an equivalent stand under the swingarm to lift the rear wheel slightly off the ground.
5. Loosen the right and left lock nuts ②. Turn the right and left chain adjuster bolts ③ clockwise.

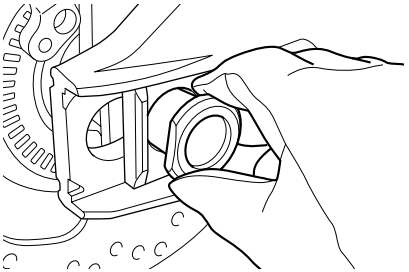

6. Draw out the axle shaft.

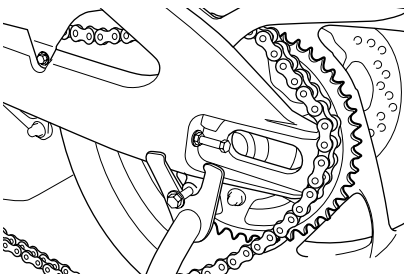

7. With the wheel moved forward, remove the chain from the sprocket.

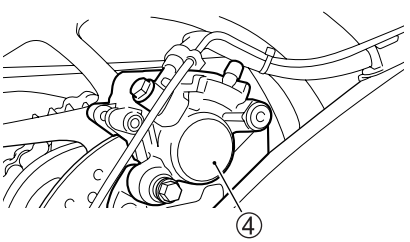

8. Remove the rear brake caliper assembly ④.

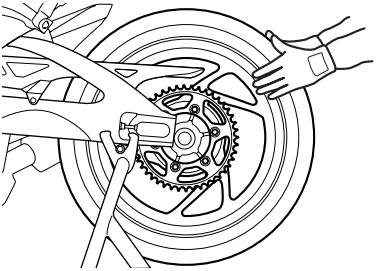

9. Pull the rear wheel assembly rearward.

NOTE: Never depress the rear brake pedal with the rear wheel removed. It is very difficult to force the pads back into the caliper assembly.

10. To replace the wheel reverse the complete sequence listed.
11. Adjust the drive chain slack.
12. After installing the wheel, apply the brake several times and then check that the wheel rotates freely.

⚠ WARNING

Failure to adjust the drive chain and failure to torque bolts and nuts properly could lead to an accident.

- **After installing the rear wheel, adjust the drive chain as described in the DRIVE CHAIN ADJUSTMENT section.**
- **Torque bolts and nuts to the proper specifications. If you are not sure of the proper procedure, have your authorized Suzuki dealer or a qualified mechanic do this.**

Rear axle nut tightening torque:
100 N·m (10.0 kgf-m, 72.5 lbf-ft)

⚠ WARNING

Failure to extend brake pads after installing the wheel can cause poor braking performance and may result in an accident.

Before riding, "pump" the brake pedal repeatedly until brake pads are pressed against the brake disks and proper pedal stroke and firm feel are restored. Also check that the wheel rotates freely.

LIGHT BULB REPLACEMENT

The wattage rating of each bulb is shown on the table below. When replacing a burned out bulb, always use the exact same wattage rating. Using other than the specified rating can result in overloading the electrical system or premature failure of a bulb.

NOTICE

Failure to use a light bulb with the correct wattage rating can overload the electrical system of your motorcycle or cause the bulb to burn out sooner.

Use only the light bulbs shown in the chart as replacement bulbs.

Headlight	12V 60/55W (H4) (GSX-S1000/A)
	12V 55W (H7) × 2 (GSX-S1000F/FA)
Turn signal light	12V 21W × 4
License plate light	12V 5W

HEADLIGHT

To replace the headlight bulb, perform the following steps:

(GSX-S1000/A)

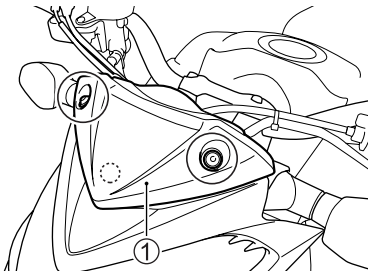

1. Remove the bolts. Unhook the hook and remove the meter cover ①.

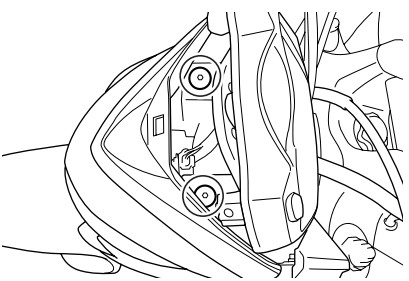



2. Remove the bolts. Pull open the headlight assembly ②.

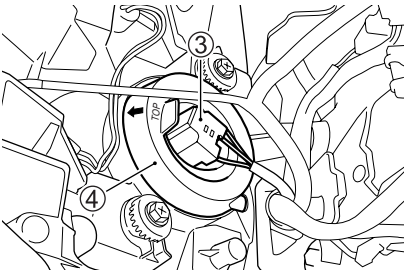

3. Disconnect the socket ③ from the headlight and remove the rubber cap ④.

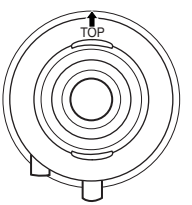

NOTE: When installing the rubber cap, face the "TOP" mark (arrow mark) to the upper side.

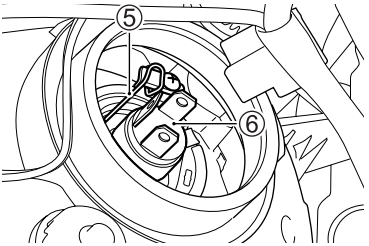

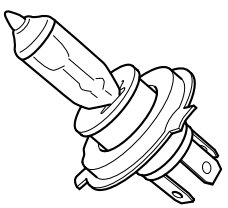

4. Unhook the bulb holder spring ⑤ and pull out the bulb ⑥.
5. To replace the headlight bulb, reverse the above sequence.

NOTICE

The headlight bulb's life may be shortened by oil from your fingers if you touch it.

When replacing the headlight bulb, be careful not to touch the glass. Grasp the new bulb with a clean cloth.

(GSX-S1000F/FA)

1. Remove the right and left meter panels by referring to the METER PANEL REMOVAL AND INSTALLATION section.

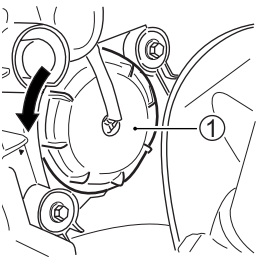

Low beam

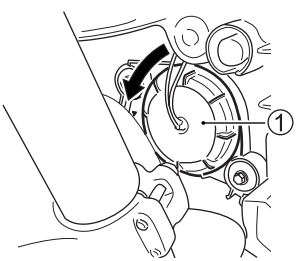

High beam

2. Turn the cap ① counterclockwise and remove it.

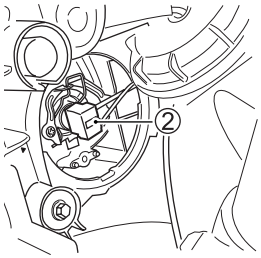

Low beam

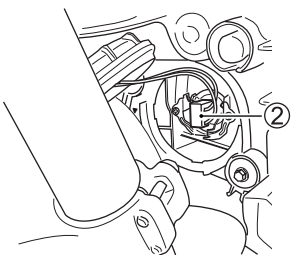

High beam

3. Disconnect the socket ②.

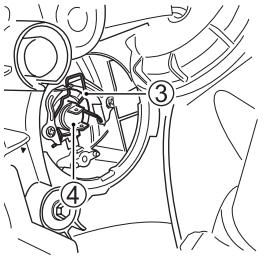

Low beam

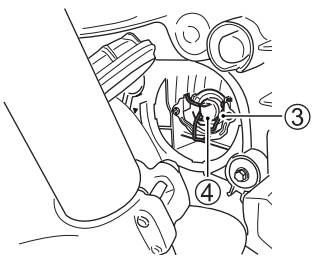

High beam

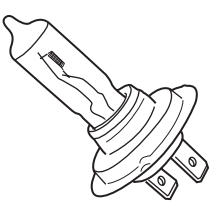

4. Unhook the bulb holder spring ③ and pull out the bulb ④.
5. To replace the headlight bulb, reverse the above sequence.

NOTICE

The headlight bulb's life may be shortened by oil from your fingers if you touch it.

When replacing the headlight bulb, be careful not to touch the glass. Grasp the new bulb with a clean cloth.

HEADLIGHT BEAM ADJUSTMENT

The headlight beam can be adjusted both up and down or right and left if necessary.

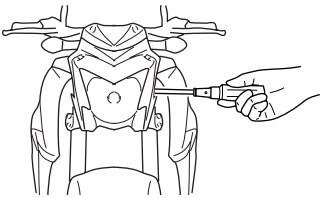

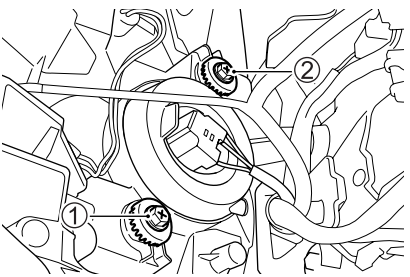

(GSX-S1000/A)

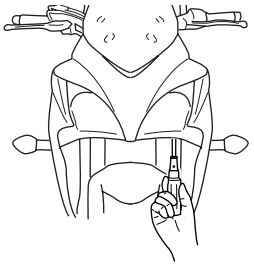

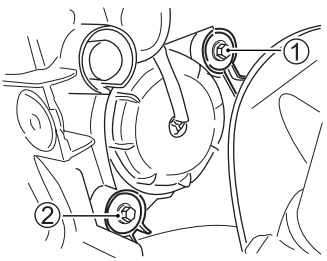

Low beam

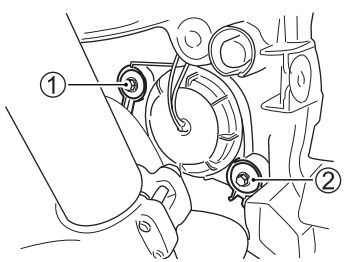

High beam

(GSX-S1000F/FA)

To adjust the beam up and down:
Turn the adjuster ① clockwise or counterclockwise.

To adjust the beam right and left:
Turn the adjuster ② clockwise or counterclockwise.

TURN SIGNAL LIGHT
To replace the turn signal light bulb, follow these directions.

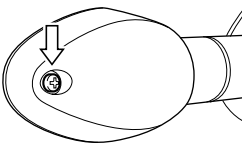

1. Remove the screw and take off the lens.

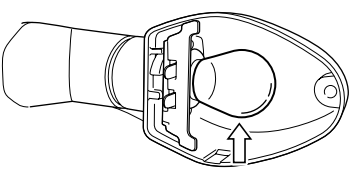

2. Push in on the bulb, twisting it to the left, and pull it out.
3. To fit the replacement bulb, push it in and twist it to the right while pushing.

NOTICE

Overtightening the screws when reinstalling the lens may cause the lens to crack.

Tighten the screws only until they are snug.

LICENSE PLATE LIGHT

To replace the license plate light bulb, follow the procedure steps:

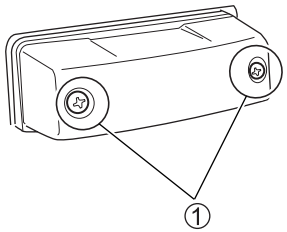

1. Remove the screws ① and take off the cover with the lens.

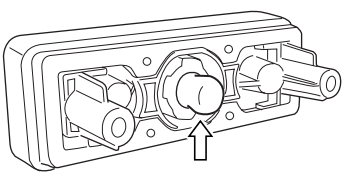

2. Pull off the bulb from the socket.
3. To replace the license plate light, reverse the above steps.

FUSES

If something electrical on your motorcycle stops working, the first thing you should check for is a blown fuse. The electrical circuits on the motorcycle are protected from overload by fuses in the circuits.

If a blown fuse is found, then the electrical problem must be inspected and repaired before replacing the blown fuse with a new fuse. Consult your Suzuki dealer for the electrical system check and repair.

⚠ WARNING

Replacing a fuse with a fuse that has an incorrect amperage rating or substitute, e.g. aluminum foil or wire, may cause serious damage to the electrical system and possibly fire. Always replace a blown fuse with a fuse of the same amperage rating.

If the new fuse blows in a short time, the electrical problem may not be fixed. Have your motorcycle inspected immediately by your Suzuki dealer.

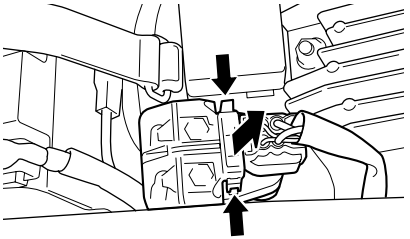

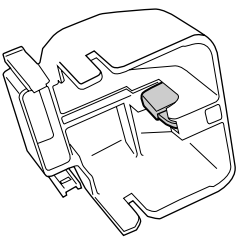

The main fuse is located under the front seat. To access the fuse, remove the front seat by referring to the SEAT LOCK AND HELMET HOLDERS section. One 30A spare fuse is located inside the fuse box cover.

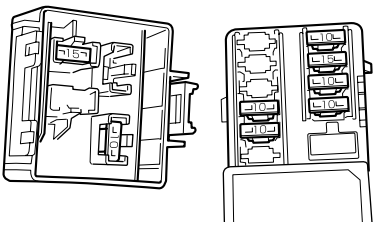

(GSX-S1000/F)

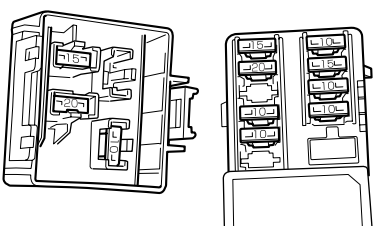

(GSX-S1000A/FA)

The fuses are located under the front seat. Two spare fuses (one 10A and one 15A) are provided inside the fuse box.

(GSX-S1000A/FA)
The ABS fuses are located under the front seat. Two spare fuses (one 20A and one 15A) are provided with the fuse box.

FUSE LIST

- 30A MAIN fuse protects all electrical circuits.
- 10A HEAD-HI fuse protects the headlight high beam and speedometer.
- 10A HEAD-LO fuse protects the headlight low beam.
- 10A IGNITION fuse protects the cooling fan relay, ISC, ignition coils, starter relay, fuel pump relay, solenoid, ECM, oxygen sensor, side stand relay and Immobilizer (if equipped).
- 10A SIGNAL fuse protects the horn, turn signal lights, position lights, taillight, stop lamp, license light and speedometer.
- 10A FUEL fuse protects the speedometer, fuel injectors, fuel pump and ECM.
- 15A FAN fuse protects the cooling fan motor.

(GSX-S1000A/FA)

- 20A ABS MOT fuse protects ABS system.
- 15A ABS VALVE fuse protects ABS system.

HANDLEBAR FITTING

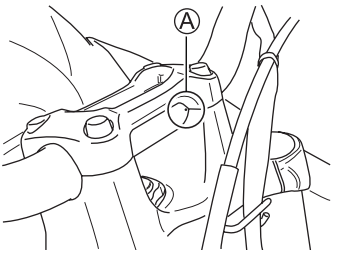

Align the dot mark on the handlebar with the mating surface Ⓐ.

CATALYTIC CONVERTER

The purpose of the catalytic converter is to minimize the amount of harmful pollutants in your motorcycle's exhaust. Use of leaded fuel in motorcycles equipped with catalytic converters is prohibited because lead deactivates the pollutant-reducing components of the catalyst system.

The converter is designed to last the life of the motorcycle under normal usage and when unleaded fuel is used. Not special maintenance is required on the converter. However, it is very important to keep the engine properly tuned. Engine misfiring, which can result from an improperly tuned engine, may cause overheating of the catalyst. This may result in permanent heat damage to the catalyst and other motorcycle components.

NOTICE

Improper motorcycle operation can cause catalyst or other motorcycle damage.

To avoid damage to the catalyst or other related components, you should take the following precautions:

- **Maintain the engine in the proper operating condition.**
- **In the event of an engine malfunction, particularly one involving engine misfire or other apparent performance loss, stop riding the motorcycle and turn off the engine and have the motorcycle serviced promptly.**
- **Do not shut off the engine or interrupt the ignition when the transmission is in gear and the motorcycle is in motion.**
- **Do not try to start the engine by pushing the motorcycle or by coasting down a hill.**
- **Do not idle the engine with any spark plug wires disconnected or removed, such as during diagnostic testing.**
- **Do not idle the vehicle for prolonged periods if idling seems rough or there are other malfunctions.**
- **Do not allow the fuel tank to get near the empty level.**

⚠ WARNING

If you park or operate the motorcycle in areas where there are combustible materials such as dry grass or leaves, these materials may come in contact with the catalytic converter or other hot exhaust components. This can cause a fire.

Avoid parking or operating your vehicle in areas with any combustible materials.



TROUBLESHOOTING

FUEL SUPPLY CHECK 7-2
IGNITION SYSTEM CHECK 7-3
ENGINE STALLING 7-3

TROUBLESHOOTING

This troubleshooting guide is provided to help you find the cause of some common complaints.

NOTICE

Improper repairs or adjustments may damage the motorcycle instead of fixing it. Such damage may not be covered under warranty.

If you are not sure about the proper action, consult your Suzuki dealer about the problem.

If the engine refuses to start, perform the following inspections to determine the cause.

FUEL SUPPLY CHECK

If the odometer displays “FI” and malfunction indicator light comes on, trouble in the fuel injection system, take your machine to an authorized Suzuki dealer. Refer to the “INSTRUMENT PANEL” section for an explanation of the malfunction indicator light.

IGNITION SYSTEM CHECK

1. Remove the spark plugs and reattach them to the spark plug caps.
2. While holding the spark plug firmly against the crank case of the engine, push the starter switch with the ignition switch in the "ON" position, the engine stop switch in the "○" position, the transmission in neutral, and the clutch disengaged. If the ignition system is operating properly, a blue spark should jump across the spark plug gap.
3. If there is no spark, clean the spark plug. Replace it if necessary. Retry the above procedure with the cleaned spark plug or a new one.
4. If there is still no spark, consult your Suzuki dealer for repairs.

⚠ WARNING

Performing the spark test improperly can be hazardous. You could get a high voltage electrical shock if you are not familiar with this procedure.

Do not perform this check if you are not familiar with the procedure. Do not point the spark plug near the spark plug hole during this test. Do not perform this test if you have a heart condition or wear a pacemaker.

ENGINE STALLING

1. Make sure there is enough fuel in the fuel tank.
2. If the odometer displays "FI" and malfunction indicator light comes on, trouble in the fuel injection system, take your machine to an authorized Suzuki dealer. Refer to the "INSTRUMENT PANEL" section for an explanation of the malfunction indicator light.
3. Check the ignition system for intermittent spark.
4. Check the idle speed. If necessary, adjust it using a tachometer. The correct idle speed is 1050 – 1250 r/min.



STORAGE PROCEDURE AND MOTORCYCLE CLEANING

STORAGE PROCEDURE 8-2
PROCEDURE FOR RETURNING TO SERVICE 8-3
CORROSION PREVENTION 8-3
MOTORCYCLE CLEANING 8-4
INSPECTION AFTER CLEANING 8-6

STORAGE PROCEDURE AND MOTORCYCLE CLEANING

STORAGE PROCEDURE

If your motorcycle is to be left unused for an extended period of time, it needs special servicing requiring appropriate materials, equipment and skill. For this reason, Suzuki recommends that you trust this maintenance work to your Suzuki dealer. If you wish to service the machine for storage yourself, follow the general guidelines below:

MOTORCYCLE

Clean the entire motorcycle. Place the motorcycle on the side stand on a firm, flat surface where it will not fall over.

FUEL

1. Fill the fuel tank to the top with fuel mixed with the amount of gasoline stabilizer recommended by the stabilizer manufacturer.
2. Run the engine for a few minutes until the stabilized gasoline fills the fuel injection system.

ENGINE

1. Pour one tablespoon of motor oil into each spark plug hole. Reinstall the spark plugs and crank the engine a few times.
2. Drain the engine oil thoroughly and refill the crankcase with fresh engine oil all the way up to the filler hole.
3. Cover the air cleaner intake and the muffler outlet with oily rags to prevent humidity from entering.

BATTERY

1. Remove the battery from the motorcycle by referring to the BATTERY section.
2. Clean the outside of the battery with a mild soap and remove corrosion from the terminals and wiring harness.
3. Store the battery in a room above freezing.

TIRES

Inflate tires to the normal pressure.

EXTERNAL

- Spray all vinyl and rubber parts with rubber protectant.
- Spray unpainted surfaces with rust preventative.
- Coat painted surfaces with car wax.

MAINTENANCE DURING STORAGE

Once a month, recharge the battery. The standard charging rate is 1.2A × 5 to 10 hours.

PROCEDURE FOR RETURNING TO SERVICE

1. Clean the entire motorcycle.
2. Remove the oily rags from the air cleaner intake and muffler outlet.
3. Drain all the engine oil. Install a new oil filter and fill the engine with fresh oil as outlined in this manual.
4. Remove the spark plugs. Turn the engine a few times. Reinstall the spark plugs.
5. Reinstall the battery by referring to the BATTERY section.
6. Make sure that the motorcycle is properly lubricated.
7. Perform the INSPECTION BEFORE RIDING as listed in this manual.
8. Start the motorcycle as outlined in this manual.

CORROSION PREVENTION

It is important to take good care of your motorcycle to protect it from corrosion and keep it looking new for years to come.

Important Information About Corrosion

Common causes of corrosion

- Accumulation of road salt, dirt, moisture, or chemicals in hard-to-reach areas.
- Chipping, scratches, and any damage to treated or painted metal surfaces resulting from minor accidents or impacts from stones and gravel.

Road salt, sea air, industrial pollution, and high humidity will all contribute to corrosion.

How to Help Prevent Corrosion

- Wash your motorcycle frequently, at least once a month. Keep your motorcycle as clean and dry as possible.
- Remove foreign material deposits. Foreign material such as road salt, chemicals, road oil or tar, tree sap, bird droppings and industrial fall-out may damage your motorcycle's finish. Remove these types of deposits as quickly as possible. If these deposits are difficult to wash off, an additional cleaner may be required. Follow the manufacturer's directions when using these special cleaners.

- Repair finish damage as soon as possible. Carefully examine your motorcycle for damage to the painted surfaces. Should you find any chips or scratches in the paint, touch them up immediately to prevent corrosion from starting. If the chips or scratches have gone through to the bare metal, have a Suzuki dealer make the repair.
- Store your motorcycle in a dry, well-ventilated area. If you often wash your motorcycle in the garage or if you frequently park it inside when wet, your garage may be damp. The high humidity may cause or accelerate corrosion. A wet motorcycle may corrode even in a heated garage if the ventilation is poor.
- Cover your motorcycle. Exposure to mid-day sun can cause the colors in paint, plastic parts, and instrument faces to fade. Covering your motorcycle with a high-quality, "breathable" motorcycle cover can help protect the finish from the harmful UV rays in sunlight, and can reduce the amount of dust and air pollution reaching the surface. Your Suzuki dealer can help you select the right cover for your motorcycle.

MOTORCYCLE CLEANING

WASHING THE MOTORCYCLE

When washing the motorcycle, follow the instructions below:

1. Remove dirt and mud from the motorcycle with cool running water. You may use a soft sponge or brush. Do not use hard materials which can scratch the paint.
2. Wash the entire motorcycle with a mild detergent or car wash soap using a sponge or soft cloth. The sponge or cloth should be frequently soaked in the soap solution.

NOTE: Clean the motorcycle with cool water immediately after riding on road salt or riding along the coast. Be sure to use cool water because warm water can hasten corrosion.

NOTE: Avoid spraying or allowing water to flow over the following places:

- *Ignition switch*
- *Spark plugs*
- *Fuel tank cap*
- *Fuel injection system*
- *Brake master cylinders*
- *Throttle cable boots*

NOTICE

High pressure washers such as those found at coin-operated car washes have enough pressure to damage the parts of your motorcycle. It may cause rust, corrosion and increase wear. Parts cleaner can also damage motorcycle parts.

Do not use high pressure washers to clean your motorcycle. Do not use parts cleaner on throttle body and fuel injection sensors.

3. Once the dirt has been completely removed, rinse off the detergent with running water.
4. After rinsing, wipe off the motorcycle with a wet chamois or cloth and allow it to dry in the shade.
5. Check carefully for damage to painted surfaces. If there is any damage, obtain "touch-up" paint and "touch-up" the damage following the procedure below:
   a. Clean all damaged spots and allow them to dry.
   b. Stir the paint and "touch-up" the damaged spots lightly with a small brush.
   c. Allow the paint to dry completely.

NOTE: The headlight lens can be fogged after washing the motorcycle or riding in the rain. Headlight fogging will be cleared gradually when the headlight is turned on. When clearing the headlight lens fogging, run the engine to avoid battery discharge.

NOTICE

Cleaning your motorcycle with any alkaline or strong acid cleaner, gasoline, brake fluid, or any other solvent will damage the motorcycle parts.

Clean only with soft cloth and warm water with mild detergent.

WINDSHIELD CLEANING (GSX-S1000F/FA)

Clean the windshield with a soft cloth and warm water with a mild detergent. If scratched, polish with a commercially available plastic polish. Replace the windshield if it becomes scratched or discolored so as to obstruct view. When replacing the windshield, use a Suzuki replacement windshield.

WAXING THE MOTORCYCLE

After washing the motorcycle, waxing and polishing are recommended to further protect and beautify the paint.

- Only use waxes and polishes of good quality.
- When using waxes and polishes, observe the precautions specified by the manufacturers.

SPECIAL CARE FOR MATTE FINISH PAINT

Do not use polishing compounds or waxes that contain polishing compounds on surfaces which have a matte finish. The use of polishing compounds will change the appearance of the matte finish.

Solid type waxes may be difficult to remove from surfaces with a matte finish.

Friction while riding, excessive rubbing or polishing of a surface with a matte finish will change its appearance.

INSPECTION AFTER CLEANING

For extended life of your motorcycle, lubricate it according to the "LUBRICATION POINTS" section.

⚠ WARNING

Operating the motorcycle with wet brakes can be hazardous. Wet brakes may not provide as much stopping power as dry brakes. This could lead to an accident.

Test your brakes after washing the motorcycle, while riding at slow speed. If necessary, apply the brakes several times to let friction dry out the linings.

Follow the procedures in the "INSPECTION BEFORE RIDING" section to check your motorcycle for any problems that may have arisen during your last ride.



SPECIFICATIONS

DIMENSIONS AND CURB MASS

Overall length	2115 mm (83.3 in)
Overall width	795 mm (31.3 in)
Overall height	1080 mm (42.5 in)
Wheelbase	1460 mm (57.5 in)
Ground clearance	140 mm (5.5 in)
Seat height	810 mm (31.9 in)
Curb mass	207 kg (456 lbs) ... GSX-S1000
	209 kg (461 lbs) ... GSX-S1000A
	212 kg (467 lbs) ... GSX-S1000F
	214 kg (472 lbs) ... GSX-S1000FA

ENGINE

Type	Four-stroke, liquid-cooled, DOHC
Number of cylinders	4
Bore	73.4 mm (2.890 in)
Stroke	59.0 mm (2.323 in)
Displacement	999 cm^3 (61.0 cu. in)
Compression ratio	12.2 : 1
Fuel system	Fuel injection
Air cleaner	Paper element
Starter system	Electric
Lubrication system	Wet sump

DRIVE TRAIN

Clutch	Wet multi-plate type
Transmission	6-speed constant mesh
Gearshift pattern	1-down, 5-up
Primary reduction ratio	1.553 (73/47)
Gear ratios, Low	2.562 (41/16)
2nd	2.052 (39/19)
3rd	1.714 (36/21)
4th	1.500 (36/24)
5th	1.360 (34/25)
Top	1.269 (33/26)
Final reduction ratio	2.588 (44/17)
Drive chain	RK525GSH, 116 links

CHASSIS

Front suspension	Inverted telescopic, coil spring, oil damped
Rear suspension	Link type, coil spring, oil damped
Front fork stroke	120 mm (4.7 in)
Rear wheel travel	130 mm (5.1 in)
Caster	25°
Trail	100 mm (3.9 in)
Steering angle	31° (right and left)
Turning radius	3.1 m (10.2 ft)
Front brake	Disk brake, twin
Rear brake	Disk brake
Front tire size	120/70ZR17M/C (58W), tubeless
Rear tire size	190/50ZR17M/C (73W), tubeless

ELECTRICAL

Ignition type	Electronic ignition (Transistorized)
Spark plug	NGK CR9EIA-9 or DENSO IU27D
Battery	12V 36.0 kC(10 Ah)/10 HR
Generator	Three-phase A.C. generator
Main fuse	30A
Fuse	10/10/10/10/10/15A
ABS fuse	20/15A ... GSX-S1000A/FA
Headlight	12V 60/55W (H4) ... GSX-S1000/A 12V 55W (H7) × 2 ... GSX-S1000F/FA
Position light	LED
Brake light/Taillight	LED
Turn signal light	12V 21W × 4
License plate light	12V 5W
Instrument panel light	LED
Neutral indicator light	LED
High beam indicator light	LED
Turn signal indicator light	LED
Oil pressure/Coolant temperature indicator light	LED
Malfunction indicator light	LED
Traction control system indicator light	LED
ABS indicator light	LED ... GSX-S1000A/FA
Immobilizer indicator light (if equipped)	LED

CAPACITIES

Fuel tank	17.0 L (4.5/3.7 US/Imp. gal)
Engine oil, oil change	2800 ml (3.0/2.5 US/Imp. qt)
With filter change	3200 ml (3.4/2.8 US/Imp. qt)
Coolant	2.8 L (3.0/2.5 US/Imp. qt)

INDEX

A

ACCESSORY USE AND MOTORCYCLE LOADING 1-2
AIR CLEANER 6-21
ALLOW THE ENGINE OIL TO CIRCULATE BEFORE RIDING 4-3
AVOID CONSTANT LOW SPEED 4-2

B

BATTERY 6-19
BRAKES 6-38
BREAKING IN THE NEW TIRES 4-2

C

CATALYTIC CONVERTER 6-61
CLUTCH 6-31
COOLANT 6-32
CORROSION PREVENTION 8-3

D

DRIVE CHAIN 6-34

E

ENGINE COOLANT SOLUTION 3-5
ENGINE IDLE SPEED INSPECTION 6-29
ENGINE OIL 3-4,6-24
ENGINE STALLING 7-3

F

FAIRING REMOVAL AND INSTALLATION (GSX-S1000F/FA) 6-10
FRONT WHEEL REMOVAL 6-47
FUEL HOSE 6-24
FUEL OCTANE RATING 3-2
FUEL SUPPLY CHECK 7-2
FUEL TANK CAP 2-32
FUEL TANK LIFT 6-15
FUSES 6-58

G

GEARSHIFT LEVER 2-33

H

HANDLEBAR FITTING 6-60

I

IGNITION SWITCH 2-7
IGNITION SYSTEM CHECK 7-3
INSPECTION AFTER CLEANING ... 8-6
INSPECTION BEFORE RIDING 4-3
INSTRUMENT PANEL 2-10

K

KEY 2-5

L

LABELS 1-5
LEFT HANDLEBAR 2-24
LIGHT BULB REPLACEMENT 6-52
LOCATION OF PARTS 2-2
LUBRICATION POINTS 6-18
LUGGAGE STRAPS 2-36

M

MAINTENANCE SCHEDULE 6-2
MAXIMUM ENGINE SPEED RECOMMENDATION 4-2
METER PANEL REMOVAL AND INSTALLATION (GSX-S1000F/FA) 6-6
MOTORCYCLE CLEANING 8-4

N

NOISE CONTROL SYSTEM (AUSTRALIA ONLY) 1-6

O

OBSERVE YOUR FIRST AND MOST CRITICAL SERVICE 4-3
OXYGENATED FUEL RECOMMENDATION 3-2

P

PROCEDURE FOR RETURNING TO SERVICE 8-3

R

REAR BRAKE PEDAL 2-33
REAR WHEEL REMOVAL 6-50
RIDING ON HILLS 5-6
RIGHT HANDLEBAR 2-29

S

SAFE RIDING RECOMMENDATION FOR MOTORCYCLE RIDERS 1-4
SEAT LOCK AND HELMET HOLDERS 2-34
SERIAL NUMBER LOCATION 1-6
SIDE STAND 2-37
SIDE STAND/IGNITION INTERLOCK SYSTEM 6-46
STARTING OFF 5-3
STARTING THE ENGINE 5-2
STOPPING AND PARKING 5-6
STORAGE PROCEDURE 8-2
SUSPENSION ADJUSTMENT 2-38

T

THROTTLE CABLE ADJUSTMENT 6-30
TIRES 6-42
TOOLS 6-6

U

USING THE TRANSMISSION 5-4

V

VARY THE ENGINE SPEED 4-2

ASAHI DENSO

6-2-1 Somejidai, Hamakita-ku, Hamamatsu, Shizuoka 434-0046, Japan

DECLARATION of CONFORMITY
For

CE0891

Product: Immobilizer
Model: SZ137

Supplied by
ASAHI DENSO CO., LTD.
6-2-1 Somejidai, Hamakita-ku,
Hamamatsu, Shizuoka, 434-0046 Japan

Technical Construction File held by
ASAHI DENSO CO., LTD.
6-2-1 Somejidai, Hamakita-ku,
Hamamatsu, Shizuoka, 434-0046 Japan

Notified Body - R&TTE Directive
TRaC Global
100 Frobisher Business Park, Leigh Sinton Road,
Malvern, Worcestershire, WR14 1BX, UK

Standard used for comply

R&TTE Directive (Article 3.1(a) Safety)	EN60065:2002+A1:2006+A.2:2010+(Incl.A12:2011)
R&TTE Directive (Article 3.1(b) EMC)	EN301-489-1 V1.8.1:2008 EN301-489-3 V1.4.1:2002
R&TTE Directive (Article 3.2 Spectrum)	EN 300 330-1 V1.7.1 : 2010-02 EN 300 330-2 V1.5.1 : 2010-02

Means of Conformity

We declare under our sole responsibility that the Product (s) is conformity with the essential requirements and other relevant requirements of the Radio and Telecommunication Terminal Equipment (R&TTE) Directive (1999/5/EC).

Date of issue: June 27, 2011

Signature of Responsible Person:

MICHIYUKI SUZUKI

Michiyuki Suzuki
Section chief
Engineering Department

CE0891

Hereby, ASAHI DENSO CO., LTD, declares that this Immobilizer for Motor Cycle (SZ137) is in compliance with the essential requirements and other relevant provisions of Directive 1999/5/EC.

Undertegnede ASAHI DENSO CO., LTD erklærer herved, at følgende udstyr Immobilizer for Motor Cycle (SZ137) overholder de væsentlige krav og øvrige relevante krav i direktiv 1999/5/EF.

Hiermit erklärt ASAHI DENSO CO., LTD, dass sich das Gerät Immobilizer for Motor Cycle (SZ137) in Übereinstimmung mit den grundlegenden Anforderungen und den übrigen einschlägigen Bestimmungen der Richtlinie 1999/5/EG befindet.

Käesolevaga kinnitab ASAHI DENSO CO., LTD seadme Immobilizer for Motor Cycle (SZ137) vastavust direktiivi 1999/5/EÜ põhinõuetele ja nimetatud direktiivist tulenevatele teistele asjakohastele sätetele.

Por medio de la presente ASAHI DENSO CO., LTD declara que el Immobilizer for Motor Cycle (SZ137) cumple con los requisitos esenciales y cualesquiera otras disposiciones aplicables o exigibles de la Directiva 1999/5/CE.

ΜΕ ΤΗΝ ΠΑΡΟΥΣΑ ASAHI DENSO CO., LTD ΔΗΛΩΝΕΙ ΟΤΙ Immobilizer for Motor Cycle (SZ137) ΣΥΜΜΟΡΦΩΝΕΤΑΙ ΠΡΟΣ ΤΙΣ ΟΥΣΙΩΔΕΙΣ ΑΠΑΙΤΗΣΕΙΣ ΚΑΙ ΤΙΣ ΛΟΙΠΕΣ ΣΧΕΤΙΚΕΣ ΔΙΑΤΑΞΕΙΣ ΤΗΣ ΟΔΗΓΙΑΣ 1999/5/ΕΚ.

Par la présente ASAHI DENSO CO., LTD déclare que l'appareil Immobilizer for Motor Cycle (SZ137) est conforme aux exigences essentielles et aux autres dispositions pertinentes de la directive 1999/5/CE.

Con la presente ASAHI DENSO CO., LTD dichiara che questo Immobilizer for Motor Cycle (SZ137) è conforme ai requisiti essenziali ed alle altre disposizioni pertinenti stabilite dalla direttiva 1999/5/CE.

Hierbij verklaart ASAHI DENSO CO., LTD dat het toestel Immobilizer for Motor Cycle (SZ137) in overeenstemming is met de essentiële eisen en de andere relevante bepalingen van richtlijn 1999/5/EG.

ASAHI DENSO CO., LTD declara que este Immobilizer for Motor Cycle (SZ137) está conforme com os requisitos essenciais e outras disposições da Directiva 1999/5/CE.

ASAHI DENSO CO., LTD vakuuttaa täten että Immobilizer for Motor Cycle (SZ137) tyyppinen laite on direktiivin 1999/5/EY oleellisten vaatimusten ja sitä koskevien direktiivin muiden ehtojen mukainen.

Härmed intygar ASAHI DENSO CO., LTD att denna Immobilizer for Motor Cycle (SZ137) står I överensstämmelse med de väsentliga egenskapskrav och övriga relevanta bestämmelser som framgår av direktiv 1999/5/EG.

Hér með lýsir ASAHI DENSO CO., LTD yfir því að Immobilizer for Motor Cycle (SZ137) er í samræmi við grunnkröfur og aðrar kröfur, sem gerðar eru í tilskipun 1999/5/EC.

ASAHI DENSO CO., LTD erklærer herved at utstyret Immobilizer for Motor Cycle (SZ137) er i samsvar med de grunnleggende krav og øvrige relevante krav i direktiv 1999/5/EF.









SUZUKI MOTOR CORPORATION
Part No. 99011-04K50-01A February, 2015 EN (TK)
© COPYRIGHT SUZUKI MOTOR CORPORATION 2015

L6

Printed in Japan

GSX-S1000A / GSX-S1000FA

SUZUKI

Way of Life!



GSX-S1000 ABS



GSX-S1000F ABS

GSX-S1000A / GSX-S1000FA

SUZUKI

Way of Life!



GSX-S1000A



GSX-S1000FA

Color Options GSX-S1000A



Metallic Triton Blue



Mat Fibroin Gray



Sparkle Black / Candy Daring Red

Color Options GSX-S1000FA



Metallic Triton Blue



Mat Fibroin Gray



Sparkle Black/ Pearl Mira Red

GSX Series Structure

SUZUKI

Way of Life!

GSX brand family

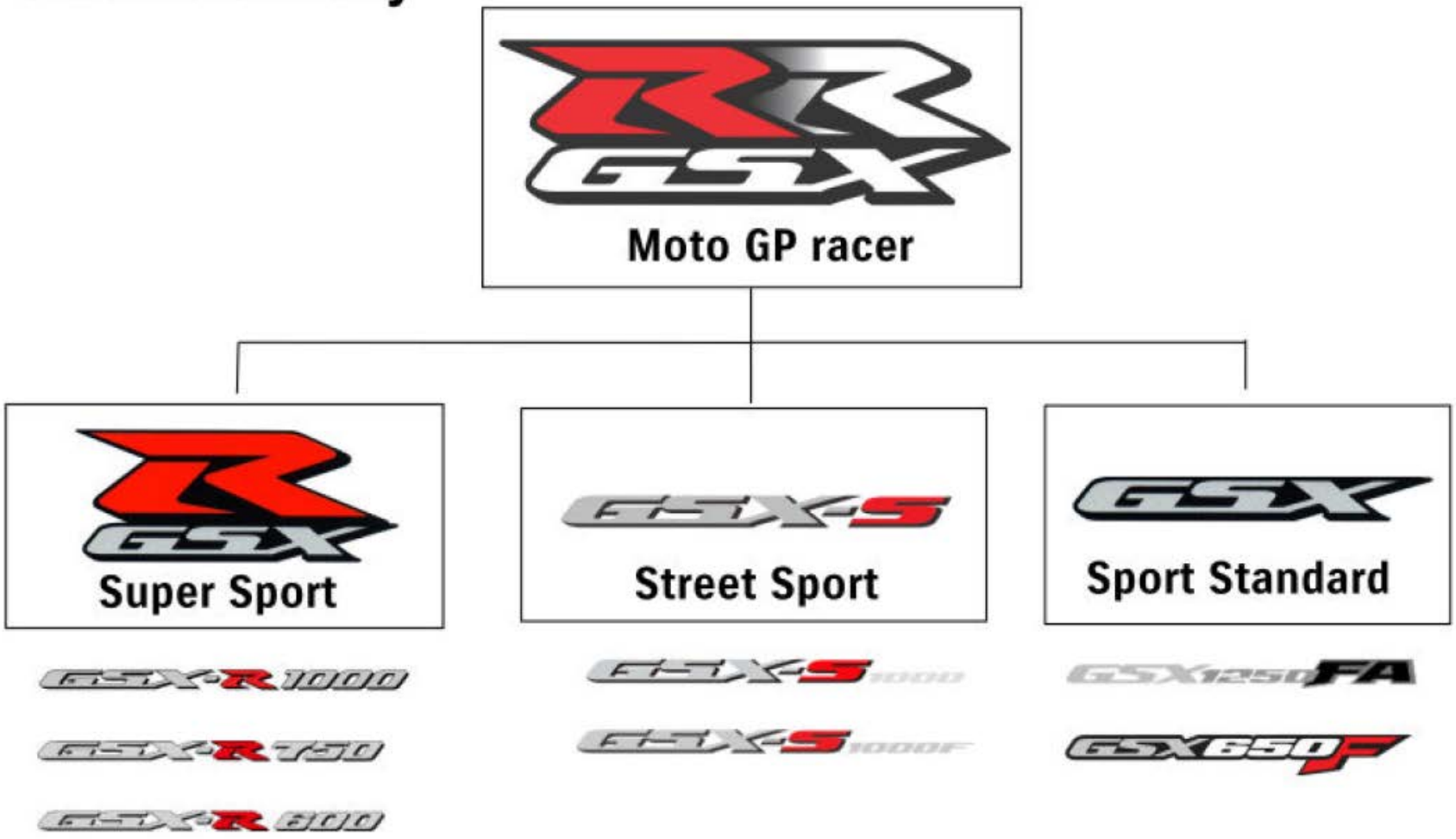

Product Concept

The product concept of GSX-S1000F is;

“The spirit of GSX-R, ready for street”

The model is developed to provide maximum fun of sport riding on street. Both engine and chassis are developed to achieve an exciting riding experience. The basic performance aspects of "running," "braking" and "cornering" are embodied to the fullest extent allowed with the latest state-of-the-art technology. The motorcycle is made for experienced, sport-minded enthusiasts who desire to enjoy sport riding on the street in an upright riding position.

Product Concept

SUZUKI Way of Life!

- **Performance features:**
  999cc inline four power unit based on the legendary GSX-R1000.
  Finely tuned Fuel injection system.
  Lightweight design for nimble handling.
  Newly designed, lightweight and compact Aluminum frame.
  Lightweight, ruggedly braced aluminum swingarm.
  KYB upside down front fork.
  Radial mount Brembo front brake calipers.
- **Utility features:**
  3-mode traction control system.
  Lightweight digital ABS.
  Sporty, yet comfortable, upright riding position.
  Sporty full-faring with decent wind protection.(GSX-S1000FA)
  Informative, full-LCD instrument.
- **Features for pride of ownership:**
  Distinctive, aggressive looking body work.
  LED position lights and taillight.
  Renthal aluminum fat bar.
  Finely tuned intake & exhaust sound.

New Technical Features

Way of Life!

Suzuki Easy Start system

Two pressure sensors monitoring manifold pressure

3-mode Traction Control

Selectable tachometer display

Engine Design - outline

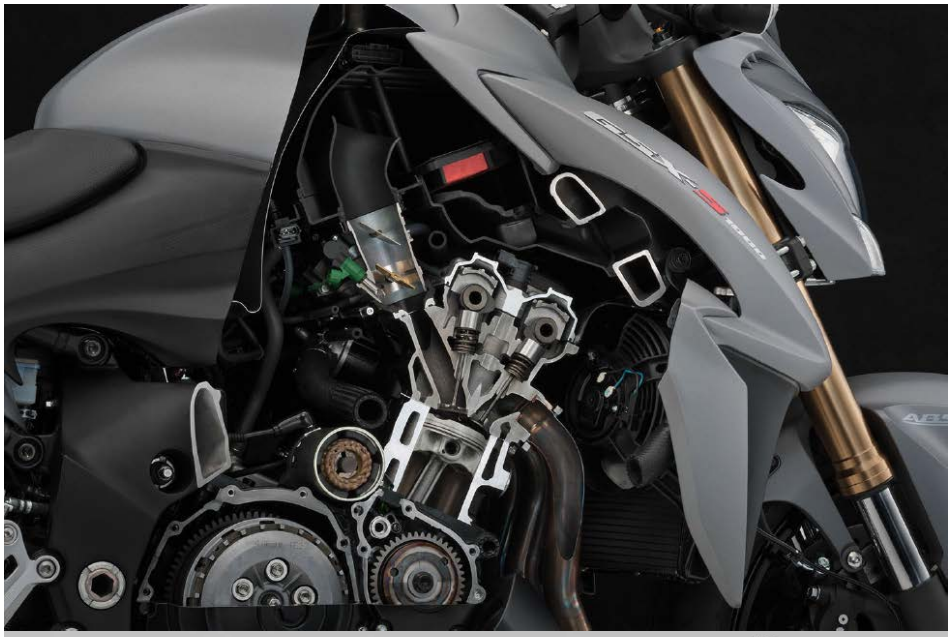



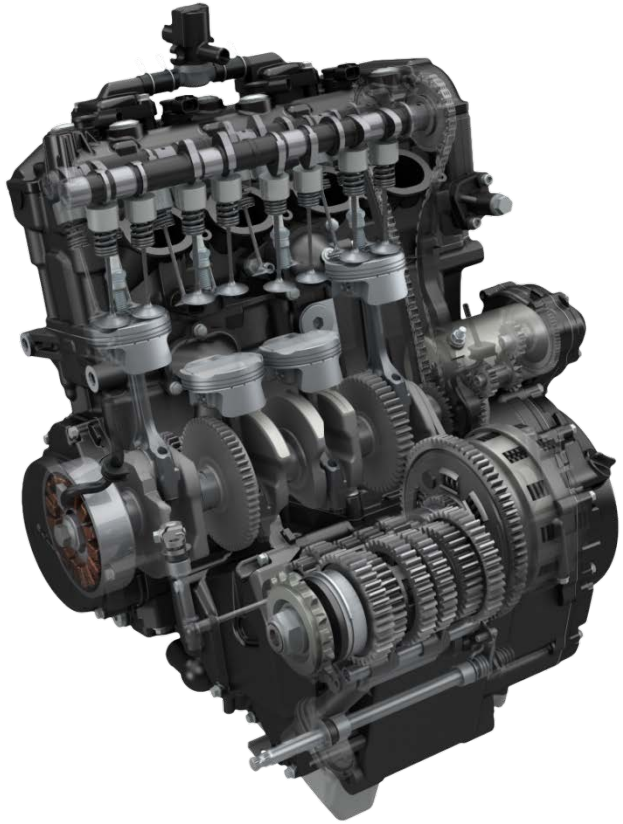

Displacement	999cm3
Bore x Stroke	73.4mm x 59.0mm
Compression ratio	12.2 : 1
Max power	107kw/10,000rpm
Max torque	106N･m/9,500rpm

Cylinder Head

The new cam profiles are designed to optimize the valve timing to tune the GSX-R1000 engine – which is designed keeping in mind racetrack use – to obtain the GSX-S1000F power character that's more suited to the streets and winding roads.

Suzuki Composite Electrochemical Material (SCEM)-plated cylinders integrated into the upper crankcase reduce friction and improve heat transfer and durability.



Iridium Spark Plug

Iridium spark plugs heighten the spark strength and combustion efficiency, thereby contributing to higher power, more linear throttle response, easier engine start-up, and a more stable idle compared to conventional type.



Spark plugType
NGK: CR9EIA-9
DENSO: IU27D

Piston and Piston Rings

New pistons were engineered with use of FEM (Finite Element Method) analysis to achieve optimal rigidity and weight.

The piston and piston rings are designed 3% lighter than that of the 2007 GSX-R engine without compromising the durability.



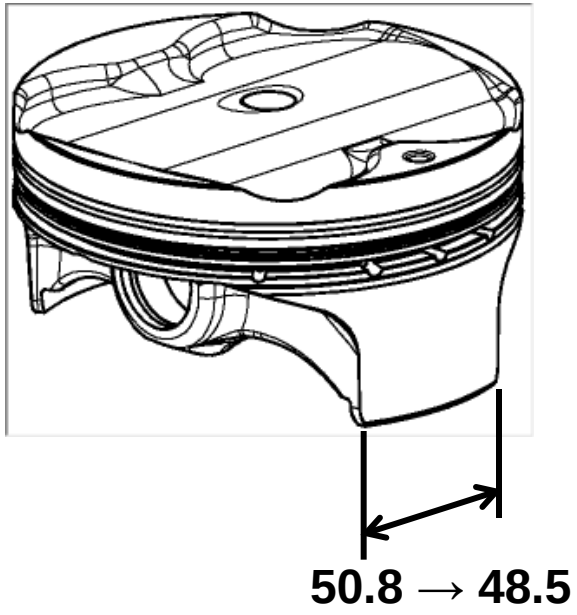

Piston

Piston Diameter

Measure the piston diameter using the micrometer at **8 mm (0.3 in) "a"** from the skirt end. If the piston diameter is less than the service limit, replace the piston.

Piston diameter

Measure at 8 mm (0.3 in) from the skirt end

[Limit]: 73.280 mm (2.8851 in)

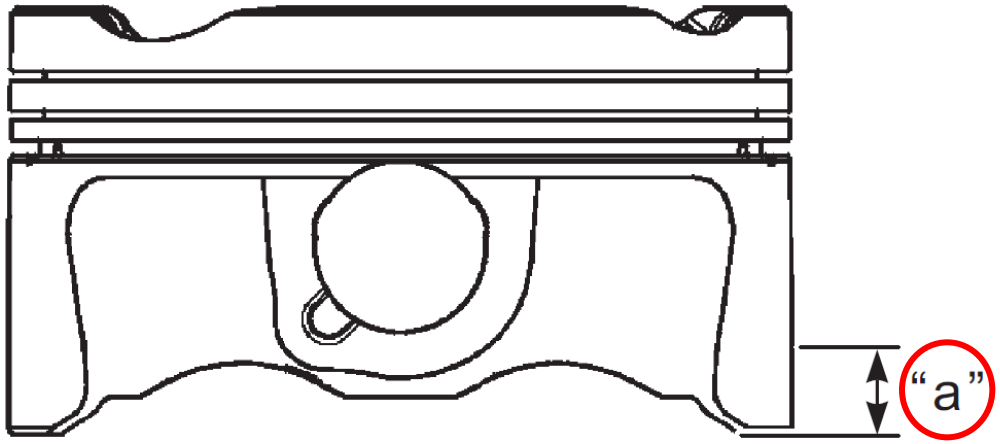

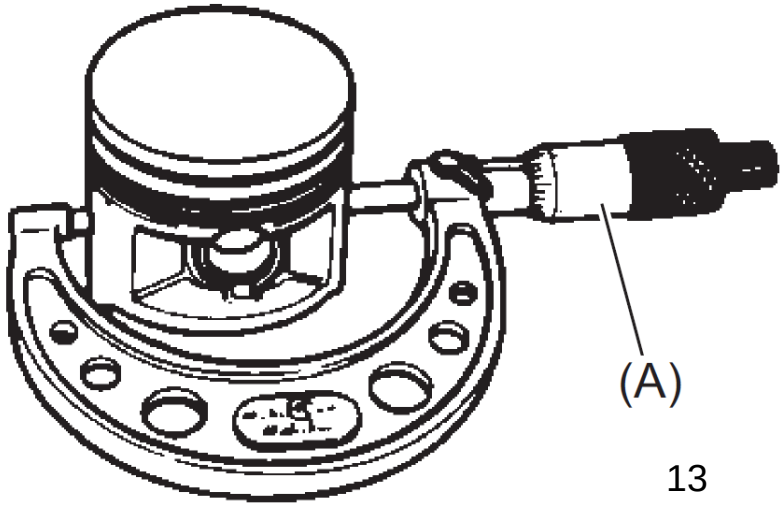

Fuel Injection

- Fuel injection system employs Suzuki's original, SDTV (Suzuki Dual Throttle Valve) 44mm throttle body (same size as GSX-R1000K7), and the secondary throttle valves are controlled by servo motor for smooth power delivery and optimum combustion efficiency.
- Fuel injectors are 10-hole; long-nosed injectors on each throttle body improve fuel atomization for better combustion efficiency and while reducing fuel consumption.
- Fuel injection works with O2 feedback system and intake pressure sensor for optimum combustion efficiency in various conditions, reduces emissions to meet Euro 3 requirement.

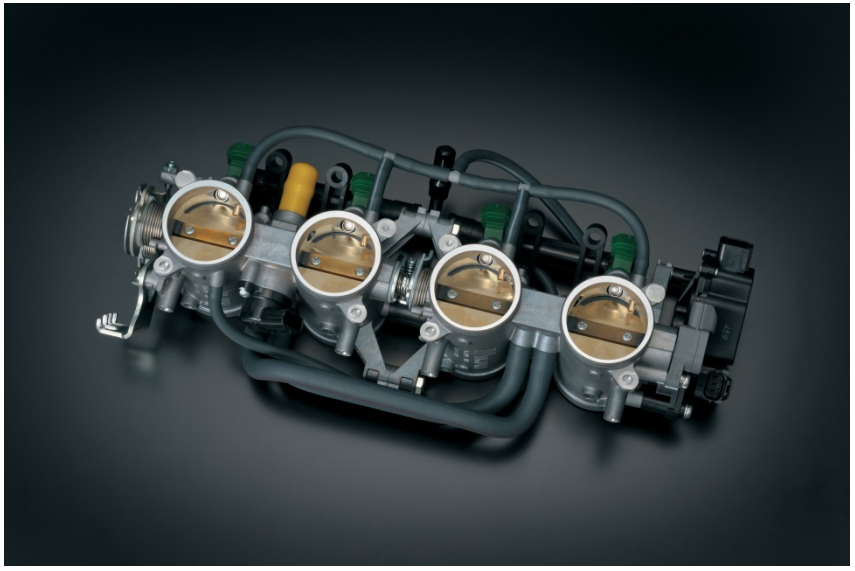





AP Sensor / IAP Sensor

ECM is located on the air cleaner box.
AP sensor is connected with a tube to throttle body #1.

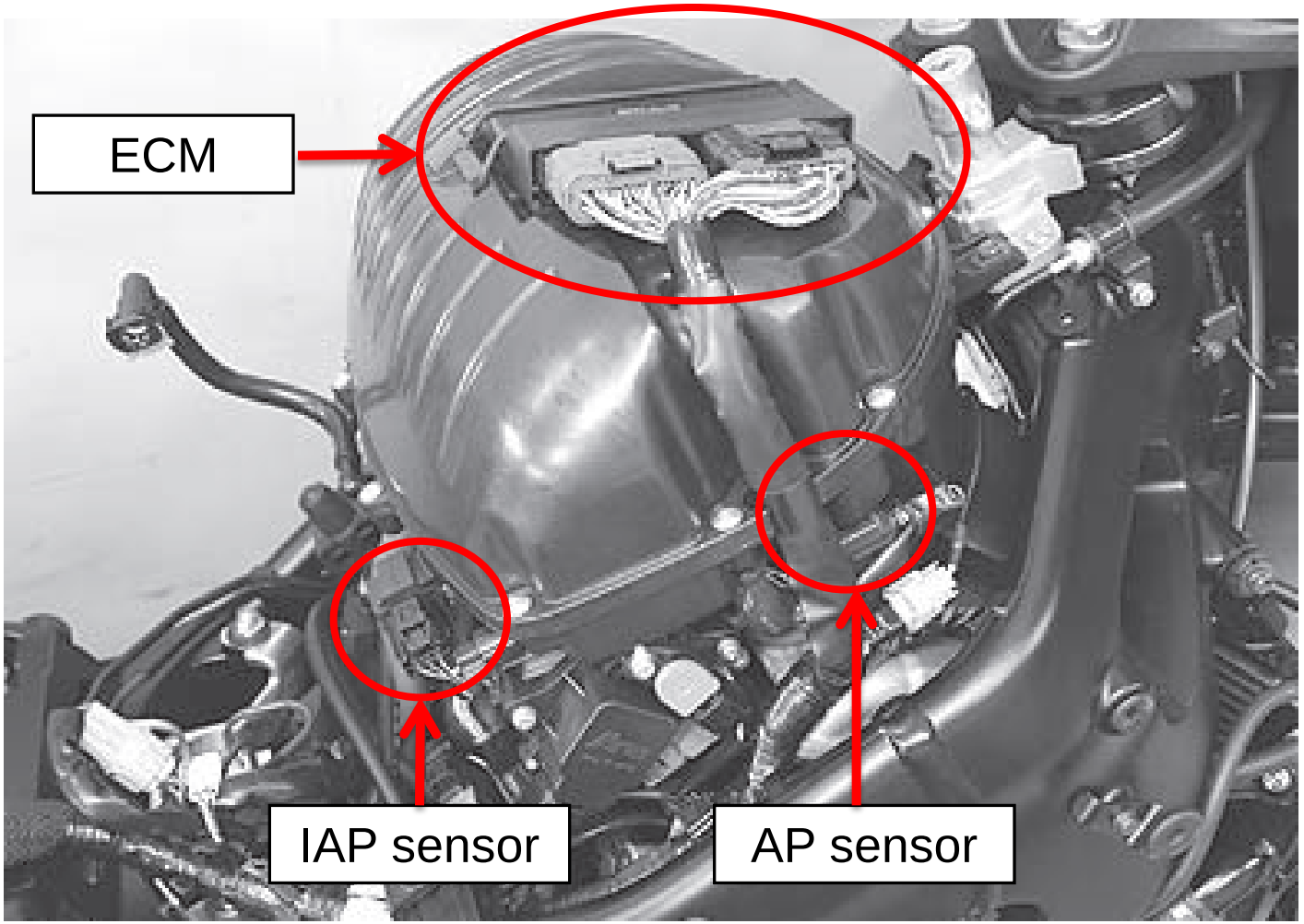

AP Sensor / IAP Sensor

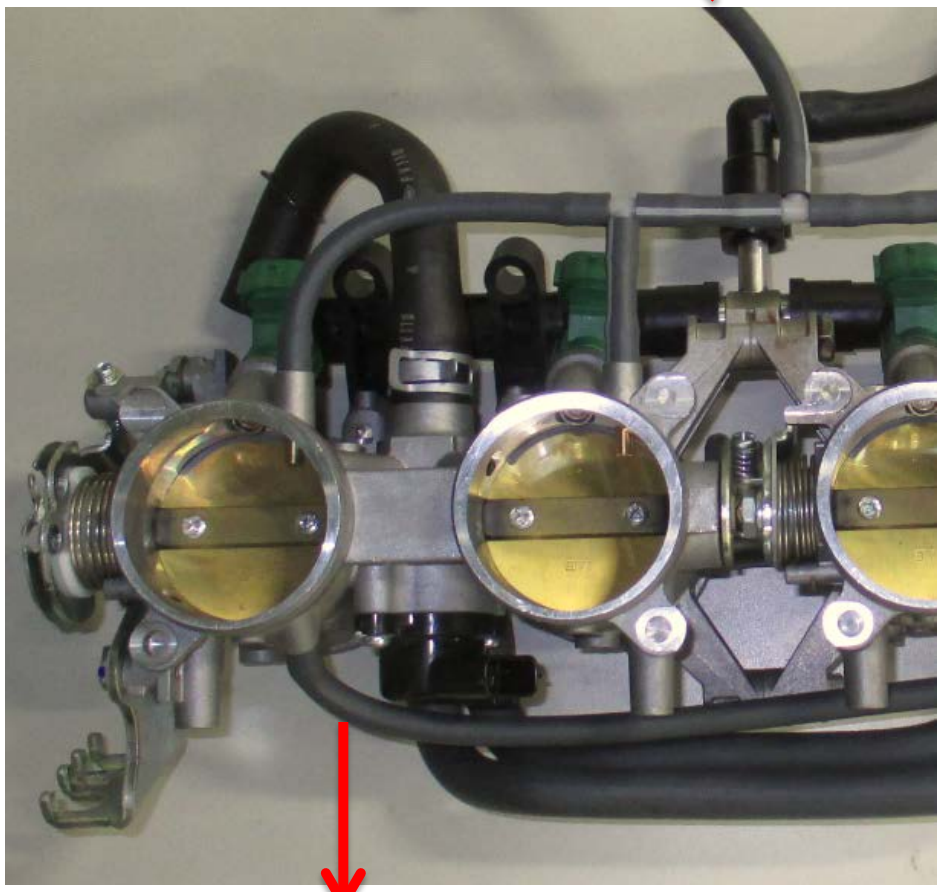

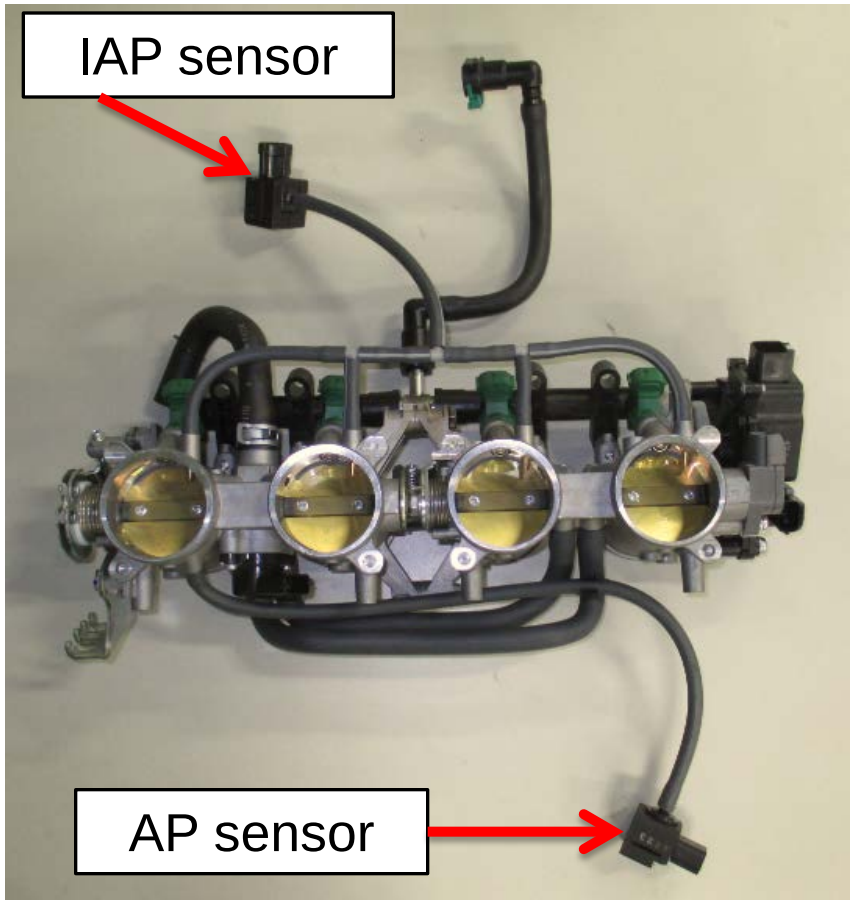

AP Sensor / IAP Sensor

Cam Position Sensor is not provided like GSX-R models.
Instead of cam position sensor, combustion cycle (Intake/Compression/ /Combustion/Exhaust) is monitored by air pressure sensor monitoring air pressure at #1 throttle bore.

CMP sensor

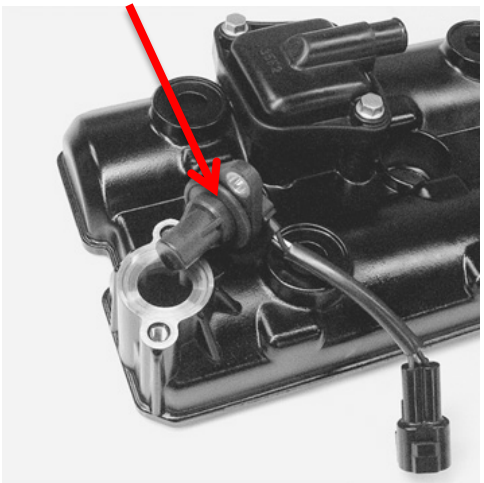

GSX-R1000K5 - K8

	GSX-R	GSX-S1000
Atmospheric pressure	AP sensor	AP sensor
Combustion cycle (*	CMP sensor	
Intake air pressure	IAP sensor	IAP sensor

* Intake / Compression / Combustion / Exhaust

AP Sensor / IAP Sensor on SDS

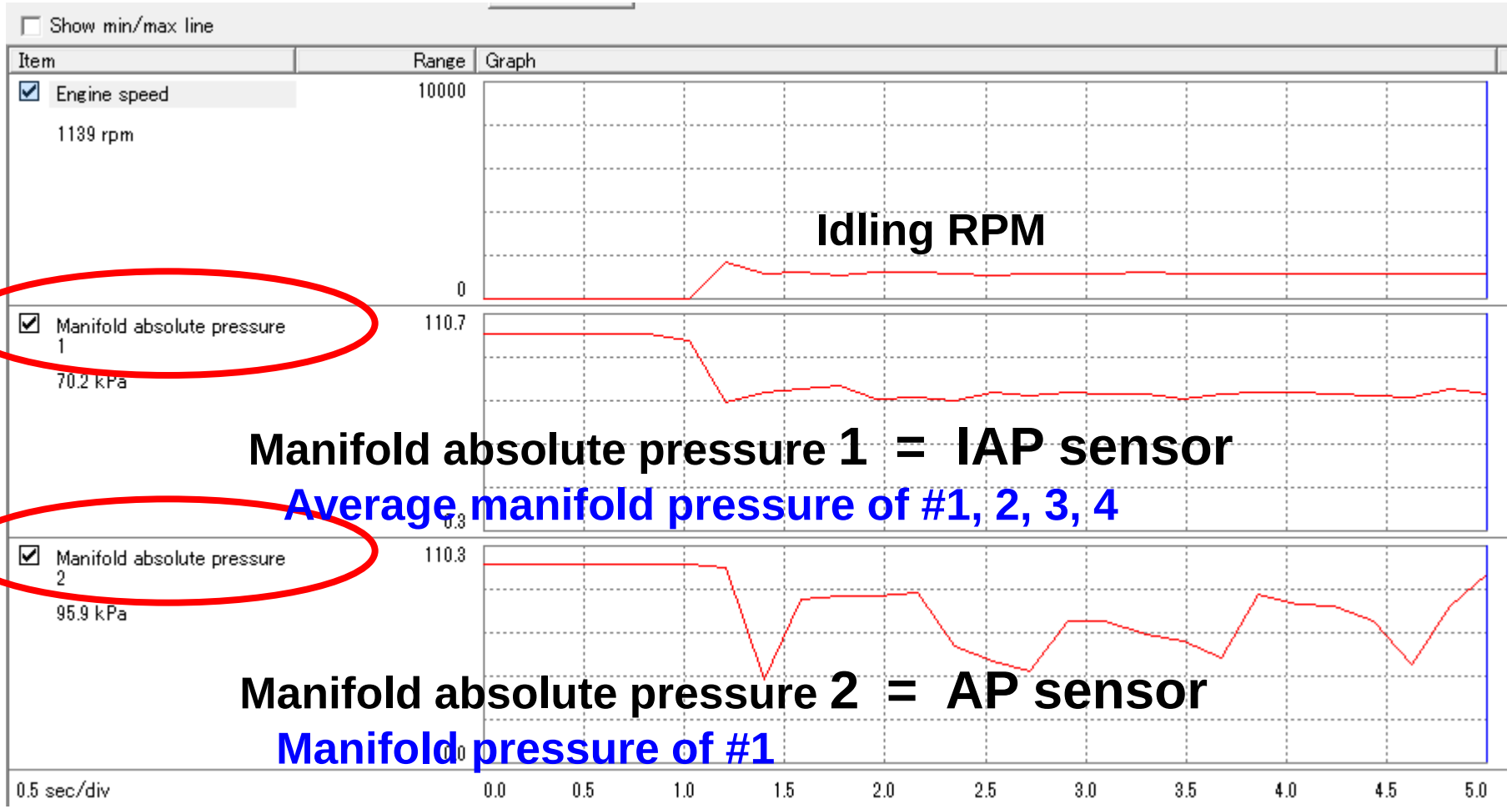

AP Sensor / IAP sensor on SDS

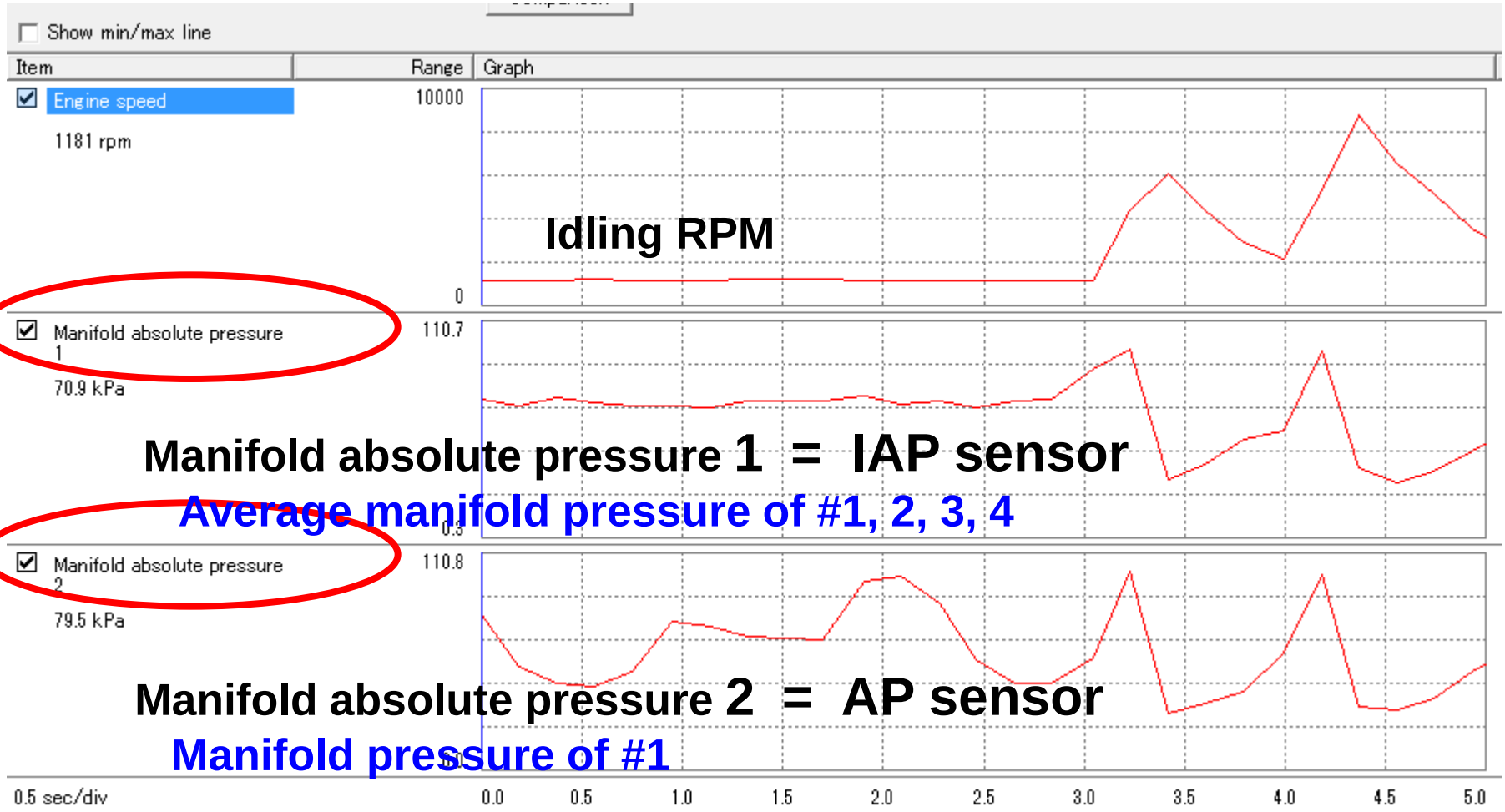

Air Cleaner

- Air cleaner is newly designed to match with required intake capacity.
- The air cleaner has partition plate inside the box, which guides air into the box, that increases intake efficiency and also it reduces intake noise.

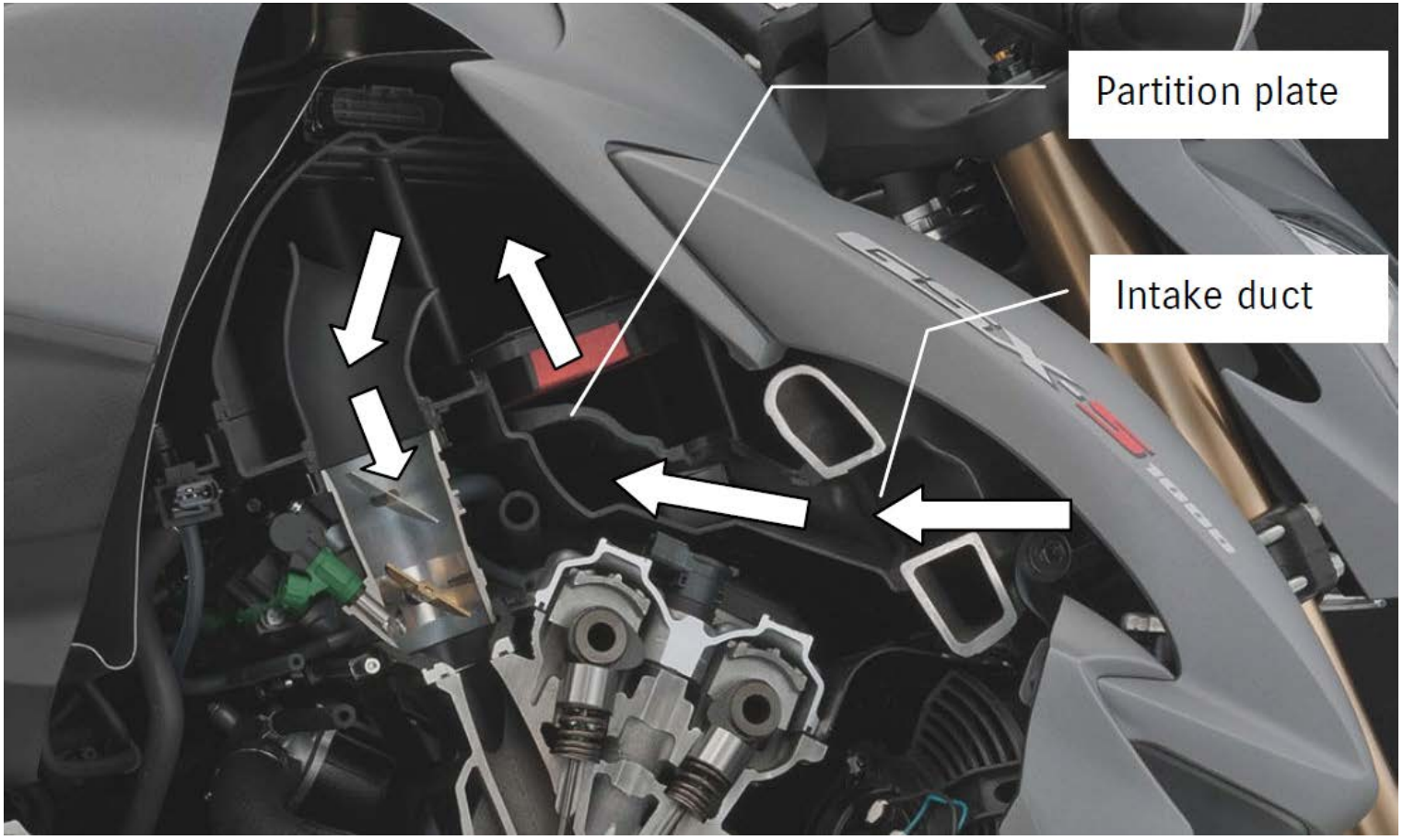

Crankcase Emission Control System

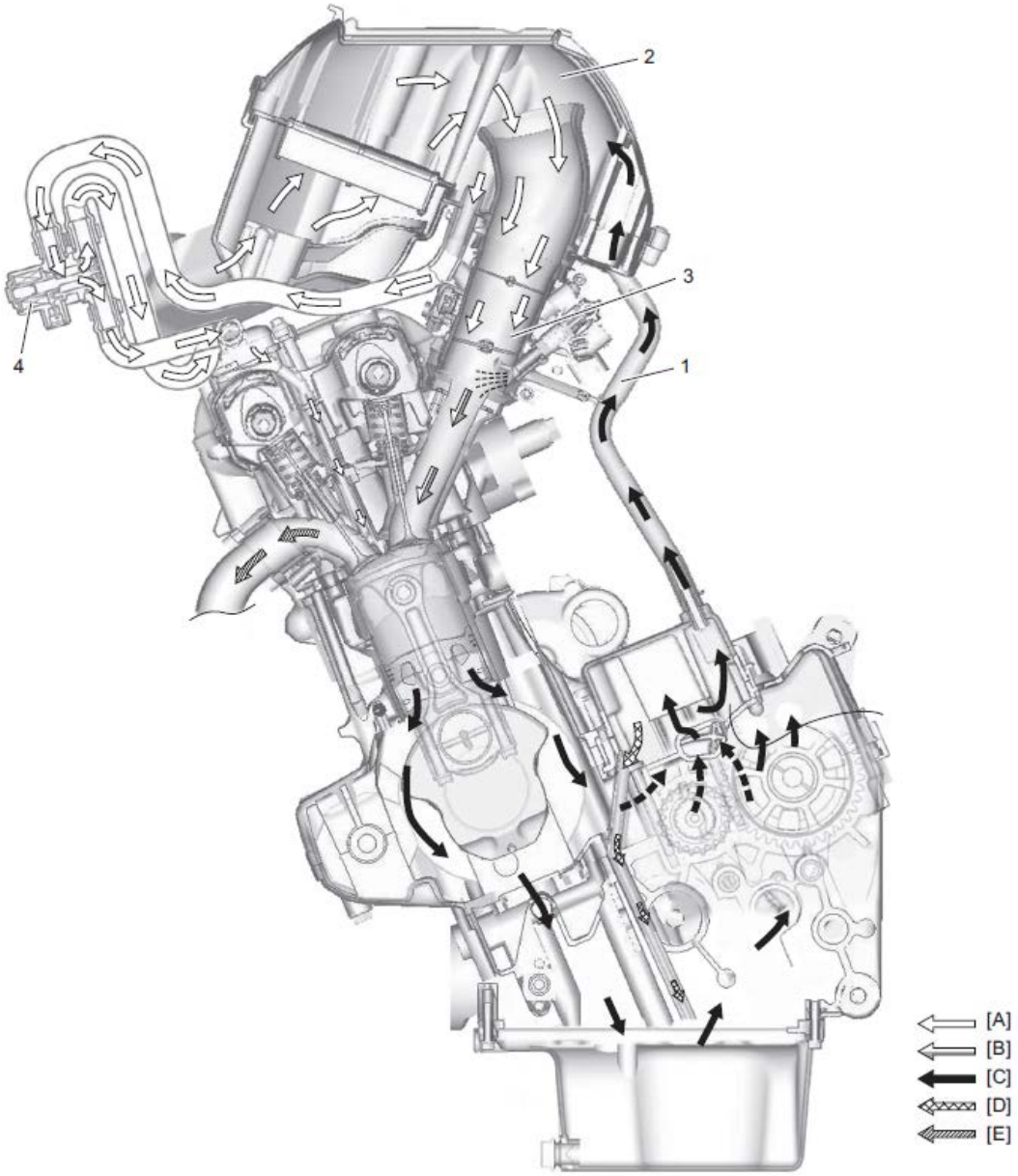

Exhaust System

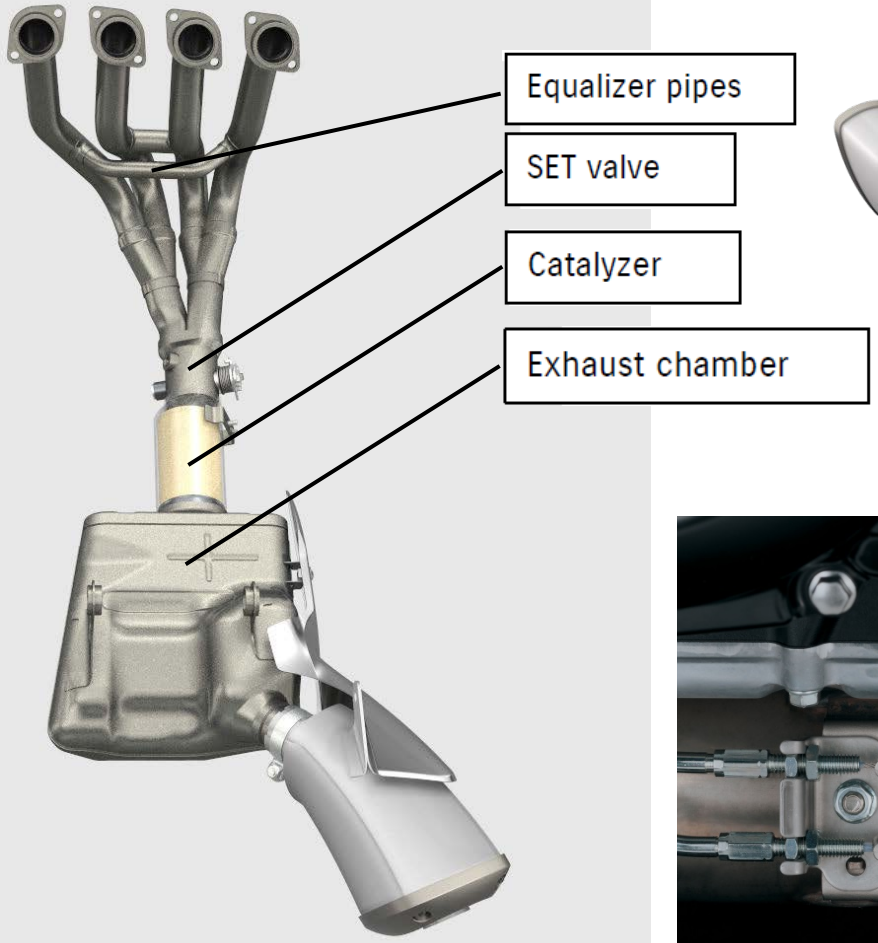

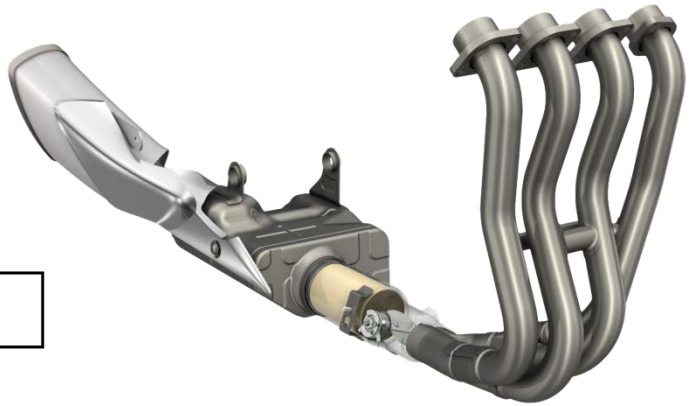

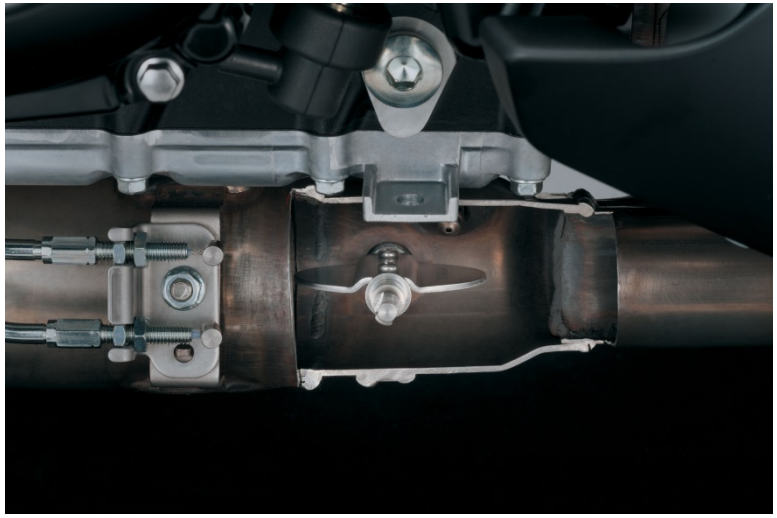

Exhaust Emission Control System

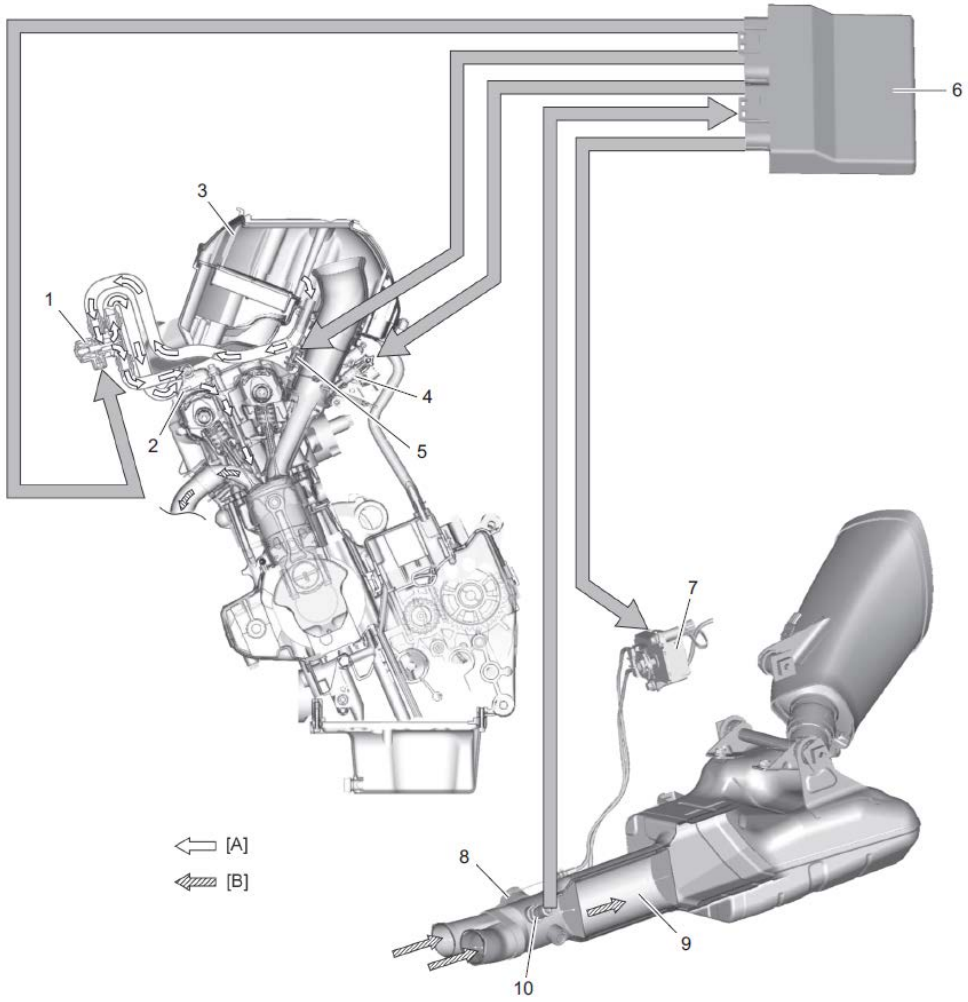

1. PAIR control solenoid valve	4. Fuel injector	7. Exhaust control valve actuator	10. HO2 sensor
2. PAIR reed valve	5. ISC valve	8. Exhaust control valve	"A": Fresh air
3. Air cleaner box	6. ECM	9. Three-way catalyst	"B": Exhaust gas

Exhaust Emission Control System

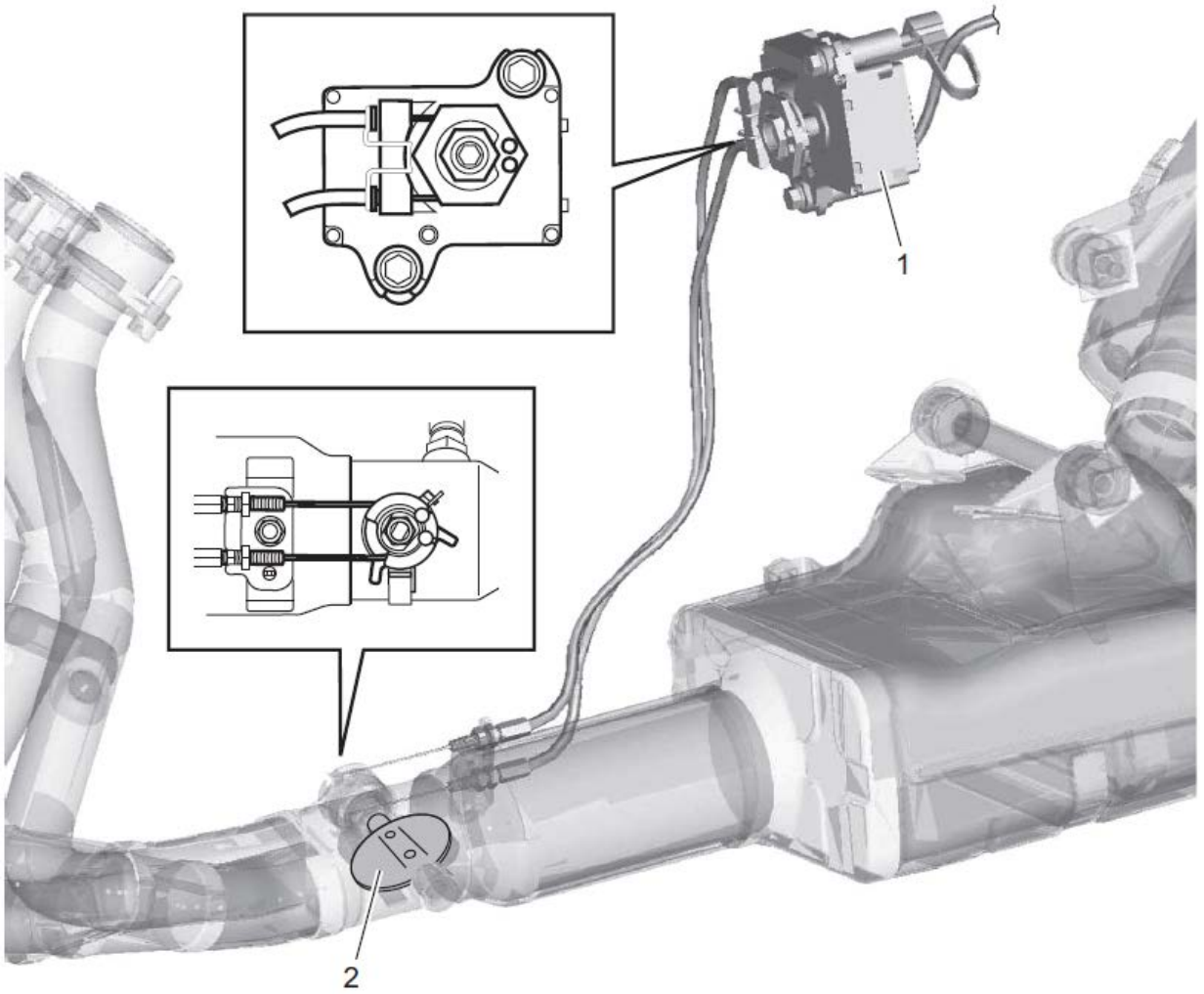

Fuel

The engine is designed to use PREMIUM unleaded gasoline only.
Use premium unleaded gasoline under all riding conditions.

Fuel label

E03, 28, 33
Use PREMIUM unleaded gasoline with min. 90 pump octane.

E12, 21, 24 and others
Use PREMIUM unleaded gasoline with min. 95 octane (RON).

Written in English or local language



Cooling System - Radiator

Newly designed, High-efficiency round shaped radiator has strong cooling performance. The radiator shrouds efficiently guide air to radiator core.



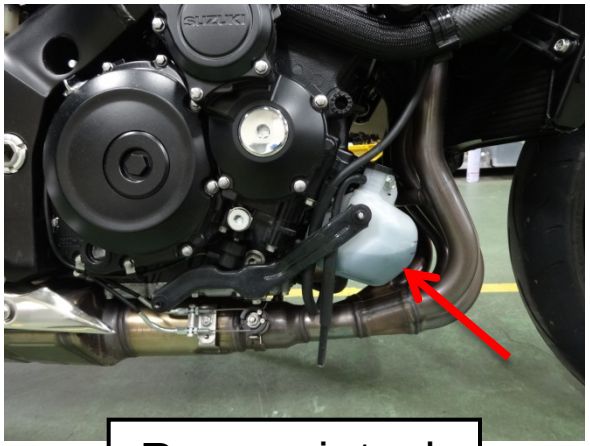

Reservoir tank

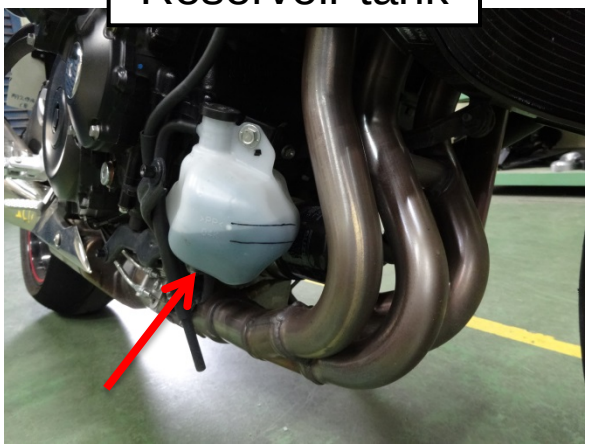

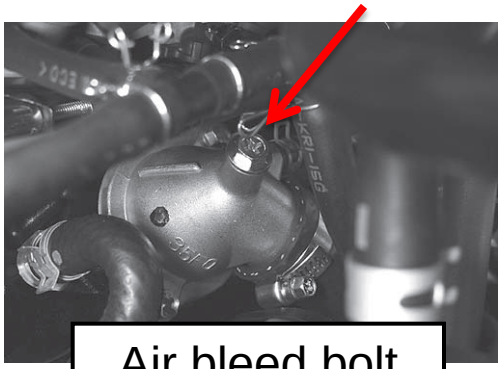

Air bleed bolt

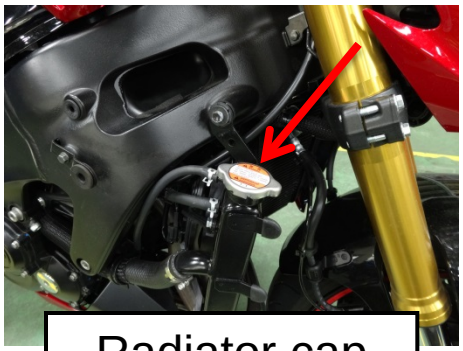

Radiator cap

Cooling System - Oil cooler

- Liquid-cooled oil cooler is used unlike air-cooled type on the GSX-R1000.
- Benefit of liquid-cooled oil cooler is lightweight, compact and clean look. Thanks to its compact design, it creates room for exhaust pipes.





3-mode Traction Control System

Way of Life!

GSX-S1000A/FA features Suzuki's advanced traction control system to let the rider to control throttle with more confidence in various riding conditions. As a results rider can enjoy sport riding with more confidence, with less stress and fatigue.

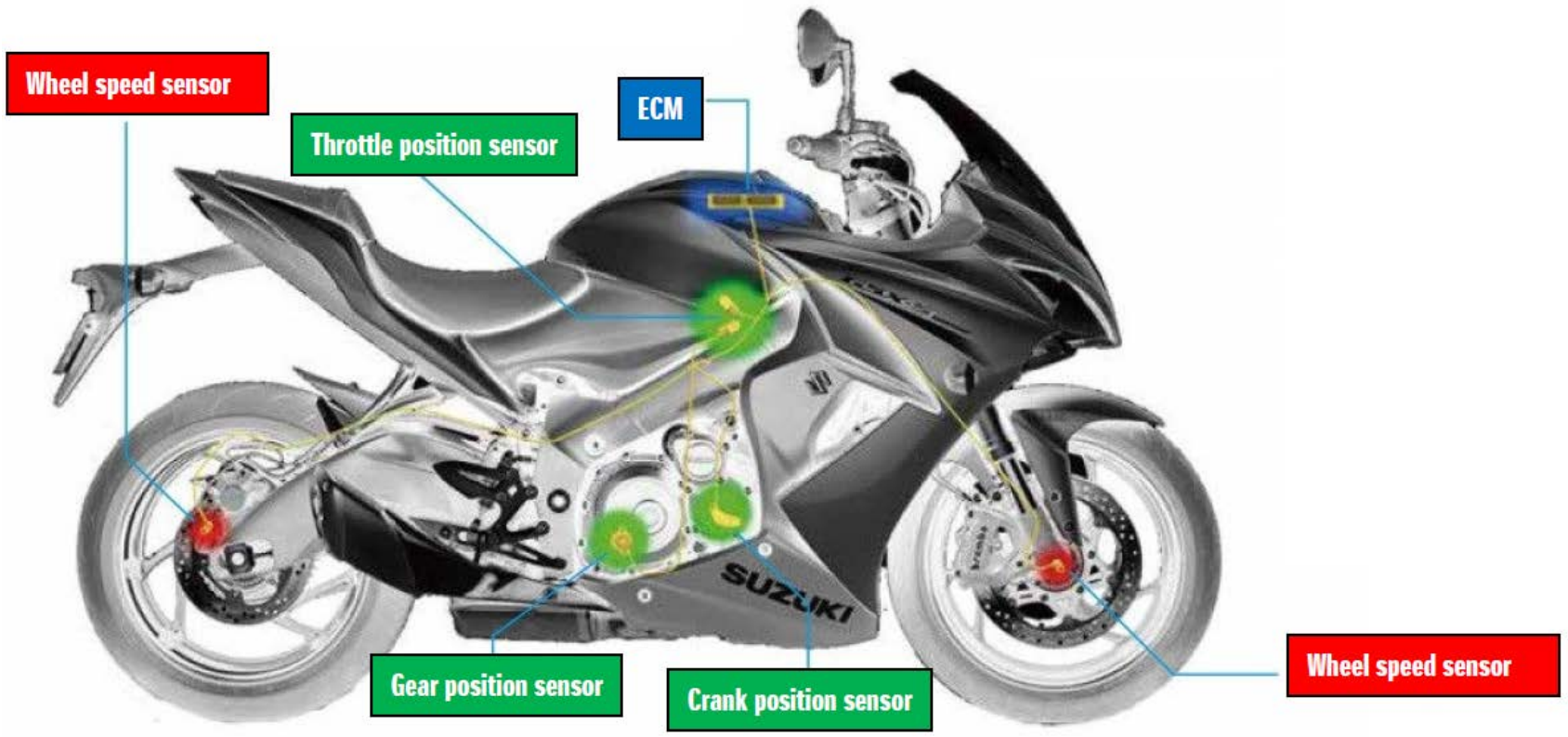

3-mode Traction Control System

- Rider can select 3 different modes 1, 2, 3 and off, depends on conditions or rider's preference. The difference between mode 1, 2 and 3 is sensitivity levels.
- Mode 1 is the lowest sensitivity level, allows certain level of rear wheel spin. It is suitable for sport riding in good grip road conditions.
- Mode 2 is the second lowest sensitivity level. System activates slightly earlier than Mode 1. It is suitable for most of the riders and road conditions.
- Mode 3 is the highest sensitivity level, system activate earlier than other 2 modes. It is suitable in bad road conditions.

Mode	Sensitivity level	Suitable conditions
OFF	-	-
1	Low	Sport riding, good road conditions
2	Middle	City riding, regular road conditions
3	High	Wet or cold conditions

Traction control switch



Traction control mode display

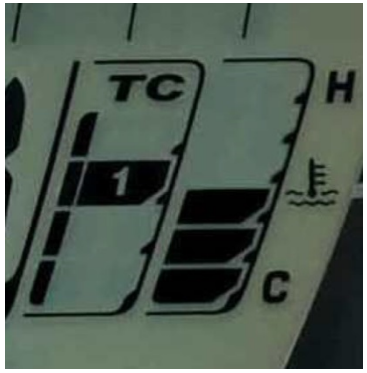

Multi-Function Instrument Panel

Full LCD Instrument cluster is designed lightweight and compact. Thanks to its full-LCD design, it eliminates motor and needle mechanics, it weighs only 275g. (i.e. GSR750 instrument: 320g, GSX-R1000 instrument: 380g)







Multi-Function Instrument Panel

Instruments are brightness-adjustable full LCD. The LCD readouts includes;

- Speedometer
- Tachometer
- Odometer
- Dual trip meter
- Gear position
- Water temperature
- Driving range
- Average fuel consumption
- Instant fuel consumption
- Traction control mode
- Fuel gauge
- Clock

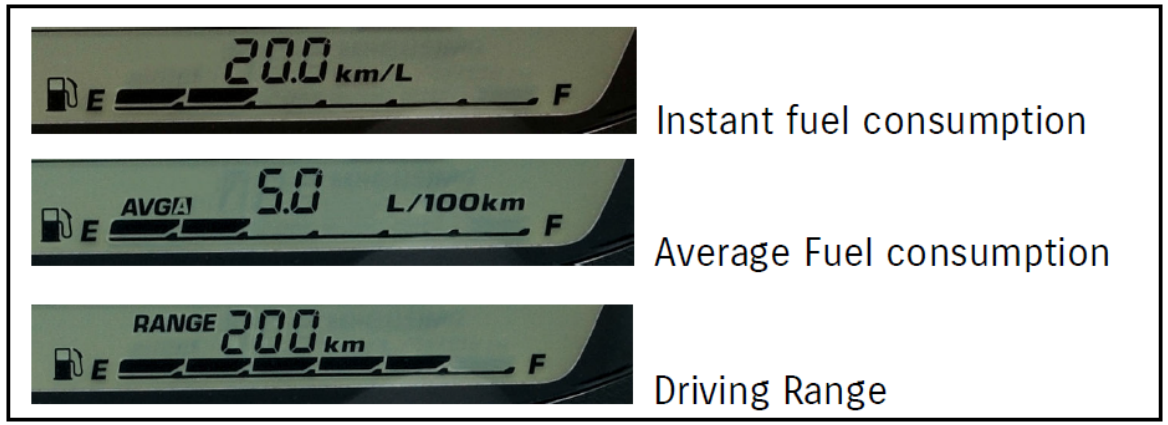

White back light for good visibility in night time riding.

LED indicators include a turn signal, high-beam, Neutral, Malfunction indicator, ABS, traction control system and coolant temperature /oil pressure indicator lights are designed to easy to recognize.

Bar-type tachometer features “peak-hold” function, which shows peak rpm when rpm drops. So rider can recognize the peak rpm of the last moment when downshifting.

Selectable Tachometer Display

SUZUKI Way of Life!

Sample movies

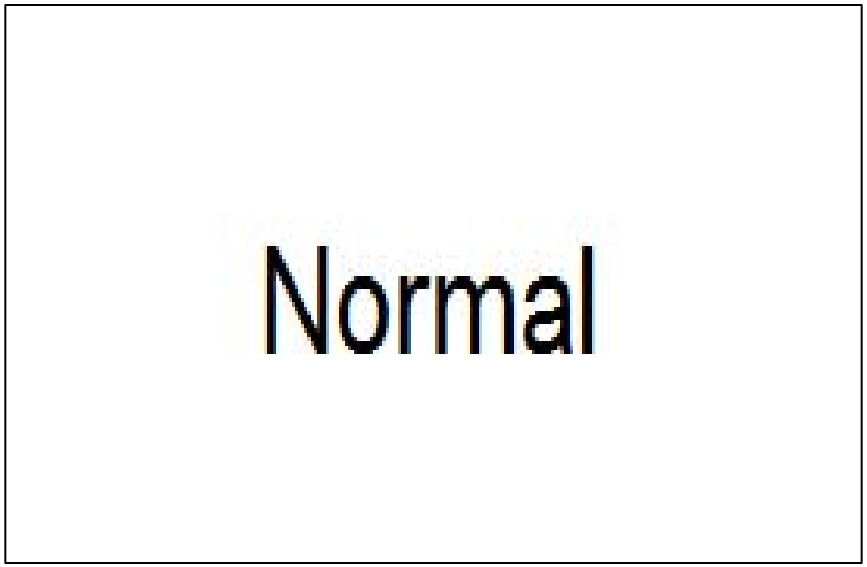



Selectable Tachometer Display

SUZUKI

Way of Life!

1 segment

2 segment

Peak hold

Suzuki Easy Start System

- GSX-S1000A/FA features a new Suzuki Easy Start system. On the regular motorcycle engine starting, rider need to press-hold the starter switch until the engine fires up. On the GSX-S1000F, all you need to do is just one-push the starter switch just like the recent automobile's engine start system. The 32-bit ECM recognizes the signals and keeps starter motor working for a certain time.
- Thanks to the new system, rider doesn't have to pull the clutch lever in engine starting. (when the gear is in neutral)



Suzuki Easy Start System

Way of Life!

When the electric starter switch is pushed, the starter motor will continue turning for about 1.5 seconds even when you release your hand from the switch. After elapsing about 1.5 second, or when the engine is started, the starter motor will stop automatically.

<u>Starter interlock system</u>

Engine can only be started if:

- **The transmission is in neutral, or**
- **The transmission is in gear, the side stand is fully up and the clutch is disengaged**

Different from the previous Suzuki models, no need to disengage the clutch when the transmission is in neutral

Suzuki Easy Start System

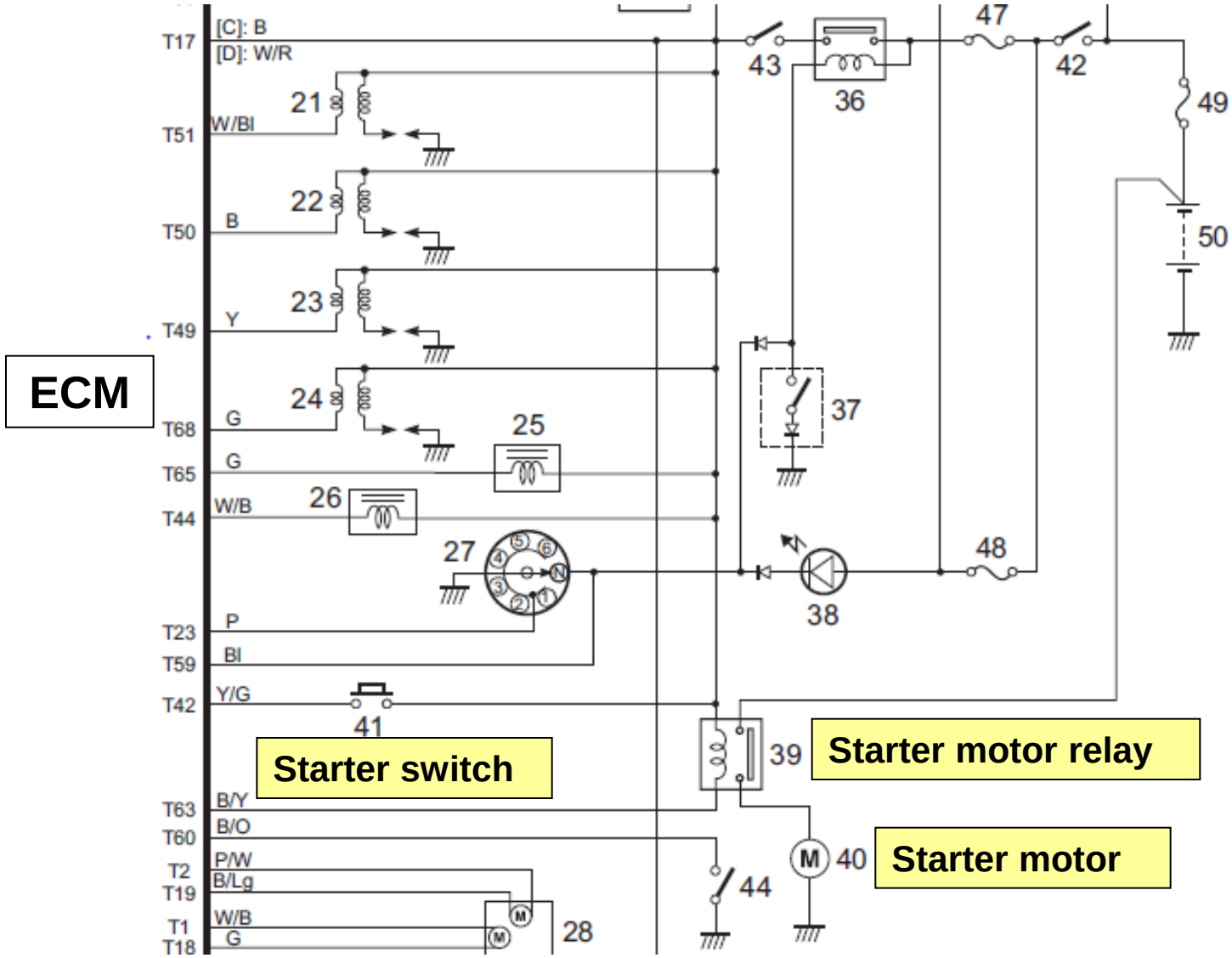

Charging System

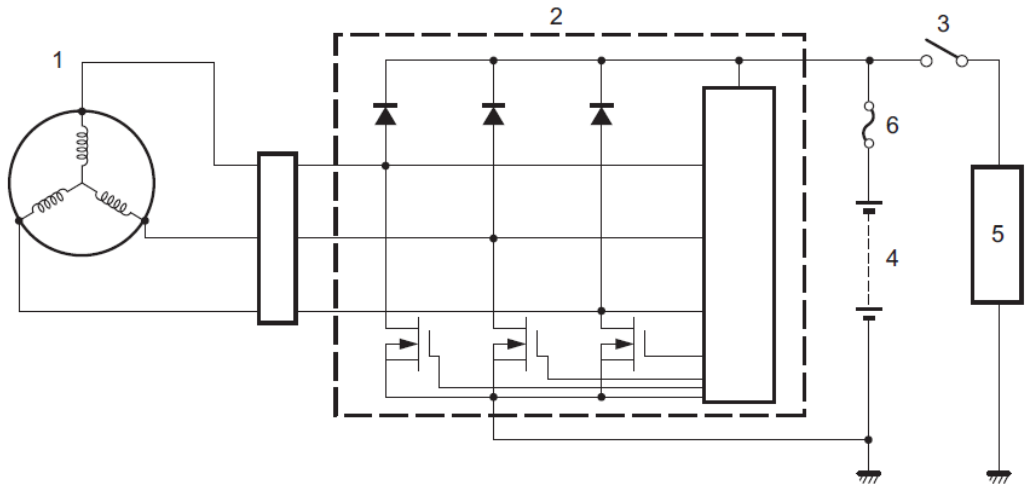

1. Generator	3. Ignition switch	5. Load
2. Regulator/rectifier	4. Battery	6. Main fuse



RECTIFIER

Chassis Design

Newly designed chassis is engineered in compact, lightweight package to provide agile, fun-to-ride character for variety of riders. And it is aimed to perform best in real world riding conditions - all roads which riders meet on Public roads, city traffic, highway, rural roads and winding roads.



Low Seat Height and Slim Bodywork

- Seat height is 810mm, one of the lowest in 1000cc sport naked class.
- Seat and fuel tank meet slim, it makes feet reach ground easier.

GSX-S1000A



GSX-S1000FA



Frame and Swingarm

- Newly designed main frame is aimed to provide nimble handling and great road holding performance.
- Main tube is designed straight from steering head to swingarm pivot. It is ideal design to achieve both high rigidity and lightweight.
- The frame is designed with latest FEM analysis technology; the weight of the frame is lighter than that of the current GSX-R1000.

- The aluminum alloy swingarm is derived straight from the current GSX-R1000.
- The highly rigid, ruggedly braced swingarm provides great road holding performance and Superbike looks.

Dimension	GSX-S1000
Wheelbase	1460mm
Rake/Trail	25° / 100mm
Seat height	810mm

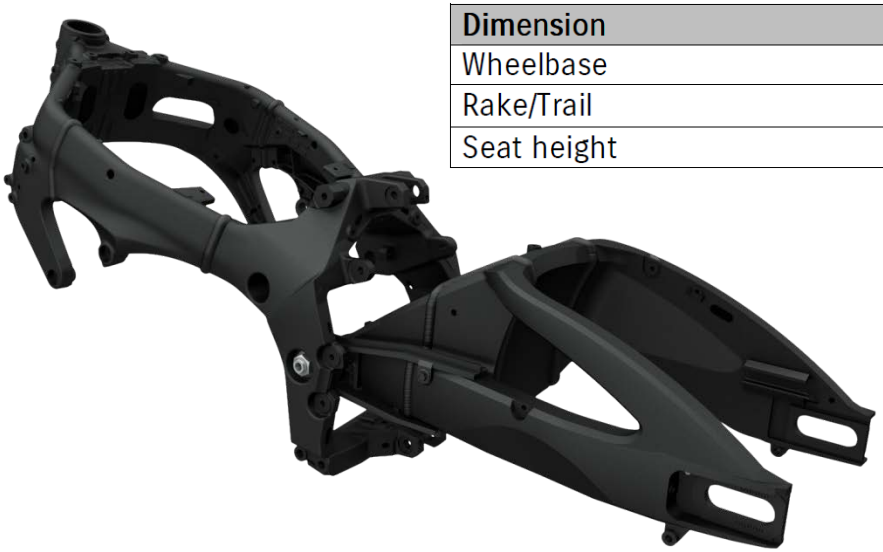



Seat

Seat shape is tailored for sport riding – easy to move around, good grip of seat skin.



Front Suspension

- Newly equipped, 43mm KYB Inverted front fork has 120mm stroke, provide sporty yet plush ride.
- The front fork is fully adjustable damping, rebound, compression and spring pre-load.



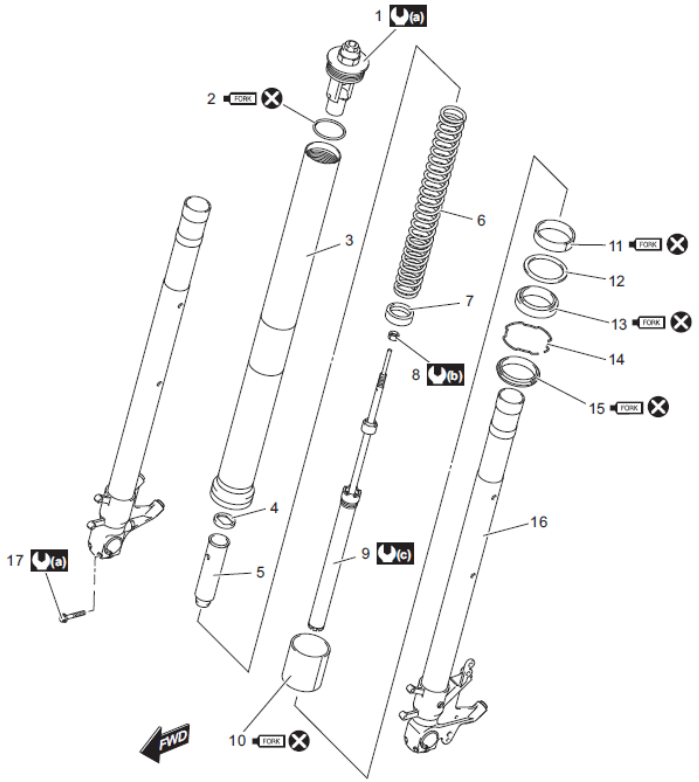

IE31J122C

1. Front fork cap bolt	9. Inner rod/damper rod	17. Gasket
2. O-ring	10. Inner tube slide metal	18. Damper rod bolt
3. Outer tube	11. Outer tube slide metal	19. Front axle pinch bolt
4. Spring retainer	12. Oil seal retainer	(a) : 23 N·m (2.3 kgf-m, 17.0 lbf-ft)
5. Spacer	13. Oil seal	(b) : 15 N·m (1.5 kgf-m, 11.0 lbf-ft)
6. Spring	14. Oil seal stopper ring	4 : Apply thread lock to the thread part.
7. Spring seat	15. Dust seal	FORK : Apply fork oil.
8. Lock-nut	16. Inner tube	: Do not reuse.

Front fork oil capacity

Each leg

GSX-S1000/A [Standard]: 518 ml (17.52 US oz,18.23 Imp oz)

GSX-S1000F/FA [Standard]: 523 ml (17.68 US oz,18.41 Imp oz)

Front fork oil level

Without spring, outer tube fully compressed

GSX-S1000/A [Standard]: 95 mm (3.7 in)

GSX-S1000F/FA [Standard]: 91 mm (3.6 in)

Front Suspension Adjustment

SUZUKI Way of Life!

Front fork spring adjuster

[Standard]: 10 mm (0.39 in)

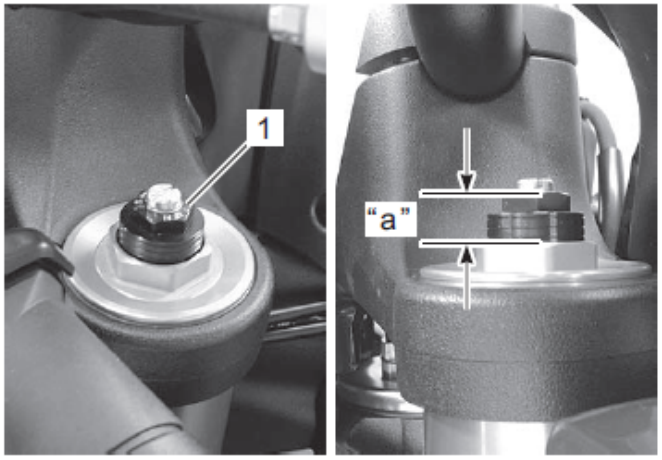

IF04K1220002-01

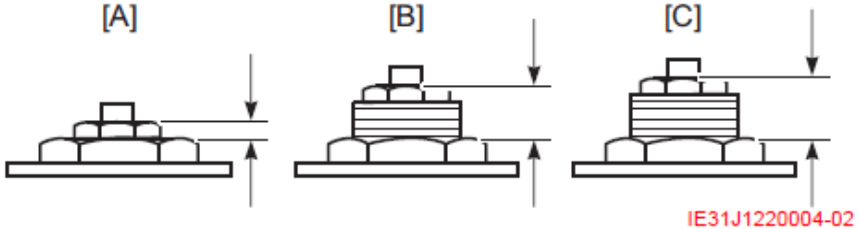

IE31J1220004-02

[A]: 4 mm (0.16 in) (maximum)	[C]: 14 mm (0.55 in) (minimum)
[B]: 10 mm (0.39 in) (standard)	

Front fork damping force adjuster

Rebound side

[Standard]: 8 clicks counterclockwise from stiffest position

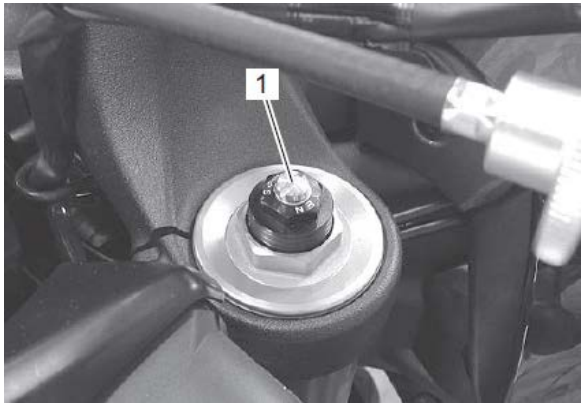

Front fork damping force adjuster

Compression side

[Standard]: 8 clicks counterclockwise from stiffest position

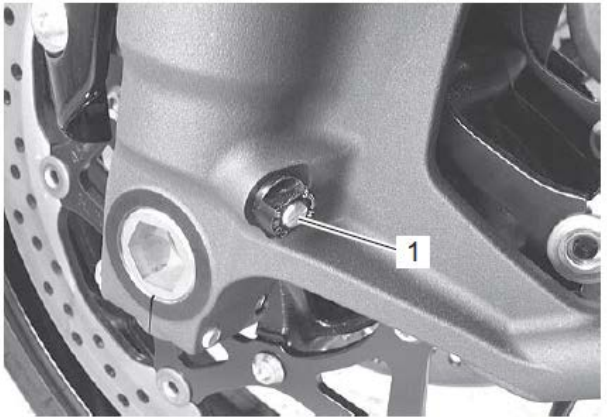

Rear Suspension

- Link-type shock unit has 63 mm stroke, tuned for a superb progressive feel, reacts efficiently to road surface conditions, delivering an agile and stable feel.
- Rear suspension is adjustable for rebound damping and spring pre-load.



Rear shock absorber spring adjuster
[Standard]: 2nd position

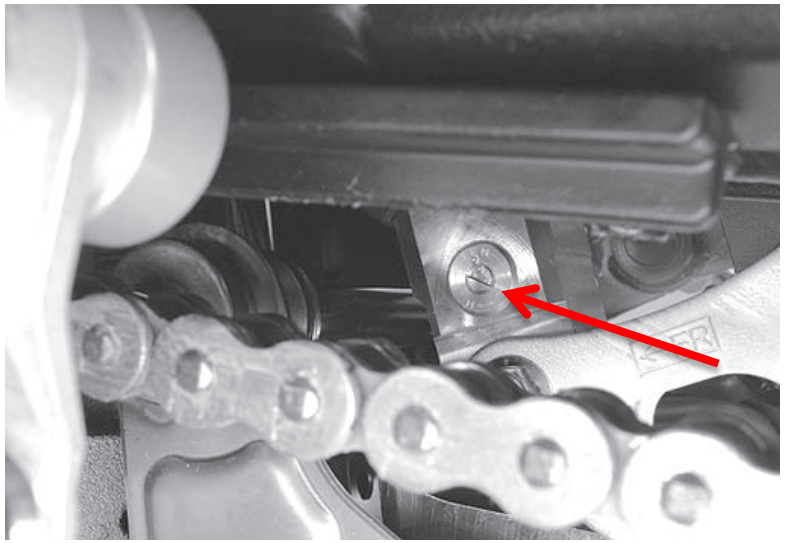

Rear shock absorber damping force adjuster
[Standard]: 1 turn counterclockwise from stiffest position

Brembo Radial Mount Brake Calipers and ABS

- Brembo mono-block front brake calipers are mated with 310mm floating-mount dual discs provides strong braking performance.
- The front brake calipers have four opposite pistons. (all 32mm)
- The front brake calipers are same type used on 2014 GSX-R1000.
- Antilock Brake System (ABS)* monitors wheel speed 50 times per wheel rotation, and matches stopping power to available traction.
- ABS control unit, produced by BOSCH, is compact and lightweight design, weights only 640g.





Wheels and Tires

- Newly designed, 6-spoke cast aluminum wheels are made light weight, provide nimble handling and sporty appearance.
- Dunlop radial tires, D214F (front) and D214R (rear) provide great grip in sport riding on the public roads.

	Size	Brand
Front tire	120/70ZR17	D214F
Rear tire	190/50ZR17	D214





Handlebar

- Handlebar is Renthal Fatbar. Its aluminum made, tapered design increases the rigidity of the handlebar, and reduces weight and vibration
- Renthal is known as top-end handlebar brand in off-road motorcycle world. Its mat-black finish, and Renthal logo on the center enhances customized look in the cockpit.





GSX-S1000A
Headlight and Turn Signal Lights

SUZUKI

Way of Life!

- Distinctively shaped headlight is multi-reflector type with 12V60/55W bulb.
- LED position lights are located under the headlight, shaped as a look of fang of a beast.





GSX-S1000FA
Headlight and Turn Signal Lights

SUZUKI

Way of Life!

- Distinctively shaped dual headlights are multi-reflector type with twin 12V/55W bulbs.
- LED position lights are located under the headlights, impresses its distinctive look.



Rear Combination Lights

- Thin, flatly shaped rear combination lights use LED for high visibility and long life. It is double lens design that emphasizes classy look of tail section.
- License plate light uses 12V5W bulb.



Component Location

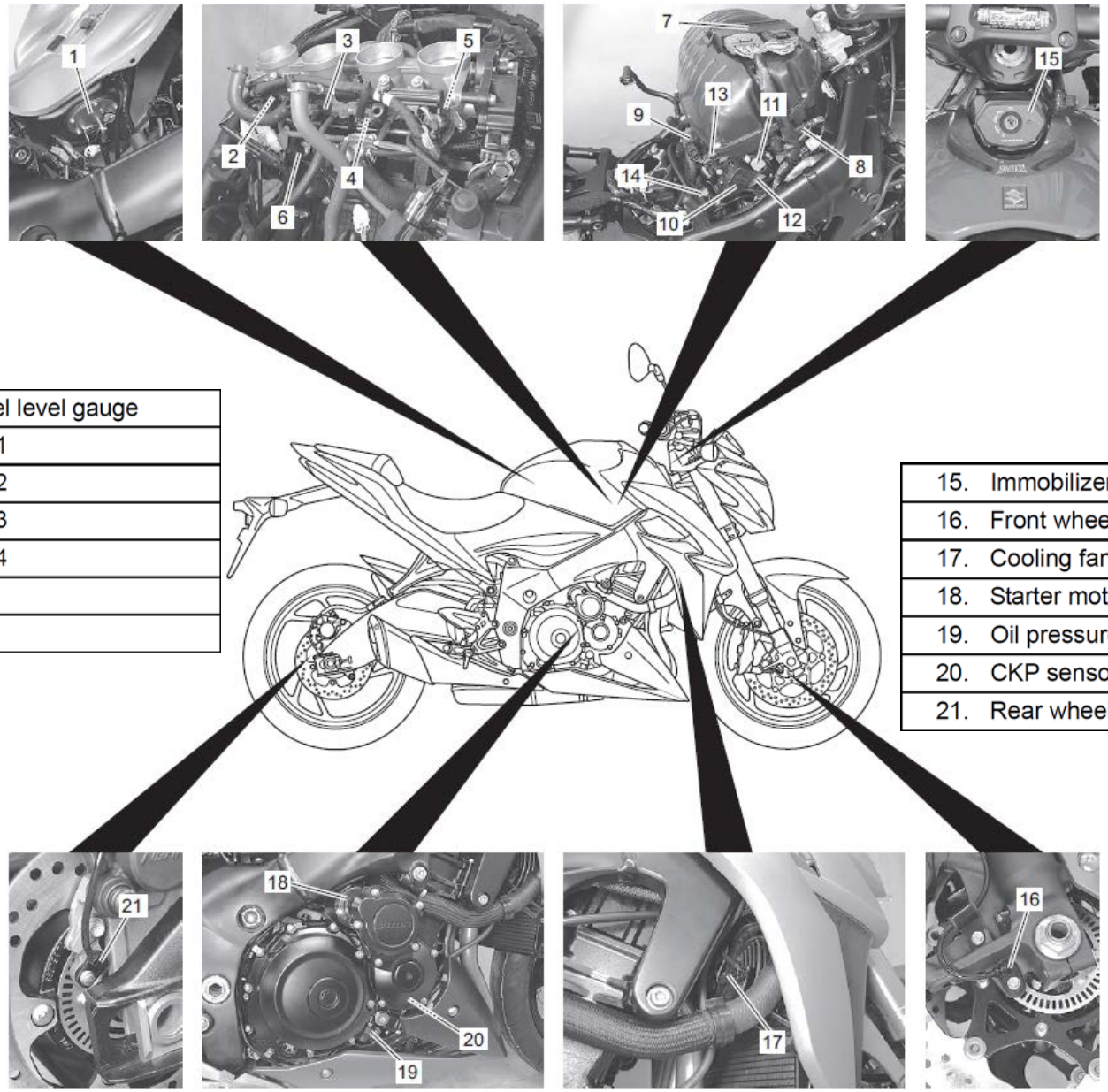

1.	Fuel pump/Fuel level gauge
2.	Fuel injector #1
3.	Fuel injector #2
4.	Fuel injector #3
5.	Fuel injector #4
6.	ECT sensor
7.	ECM

8.	AP sensor
9.	IAP sensor
10.	STV actuator
11.	STP sensor
12.	TP sensor
13.	IAT sensor
14.	EVAP system

15.	Immobilizer antenna (If equipped)
16.	Front wheel speed sensor
17.	Cooling fan
18.	Starter motor
19.	Oil pressure switch
20.	CKP sensor
21.	Rear wheel speed sensor

Component Location



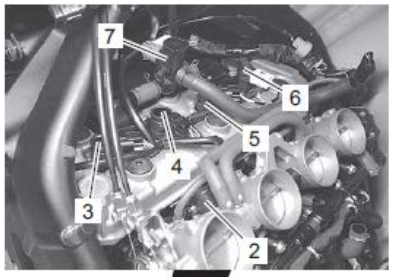

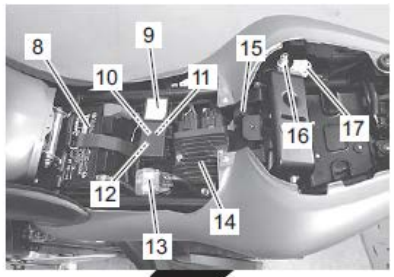

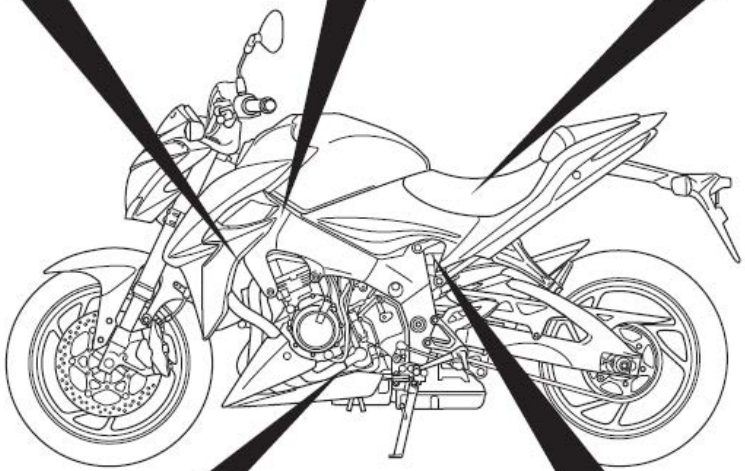

1.	Horn
2.	ISC valve
3.	Ignition coil #1
4.	Ignition coil #2
5.	Ignition coil #3
6.	Ignition coil #4
7.	PAIR control solenoid valve
8.	Battery

9.	Fuse box
10.	Cooling fan relay
11.	Side-stand relay
12.	Fuel pump relay
13.	Starter relay/Main fuse
14.	Regulator/rectifier
15.	Turn signal relay
16.	Mode select coupler (ABS)

17.	Mode select coupler (FI/SDS)
18.	TO sensor
19.	EXCV actuator
20.	ABS control unit/HU
21.	HO2 sensor
22.	Generator
23.	GP switch
24.	Side-stand switch

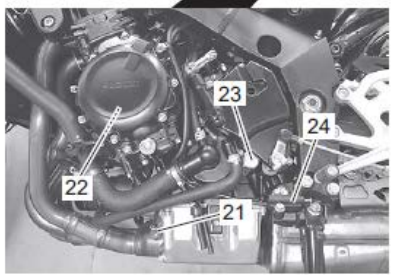

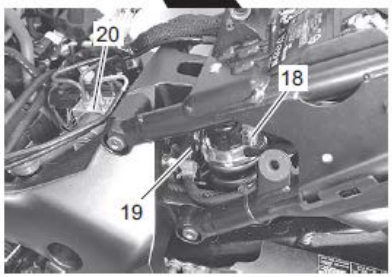

Tightening Torque for Main Parts (Steering)

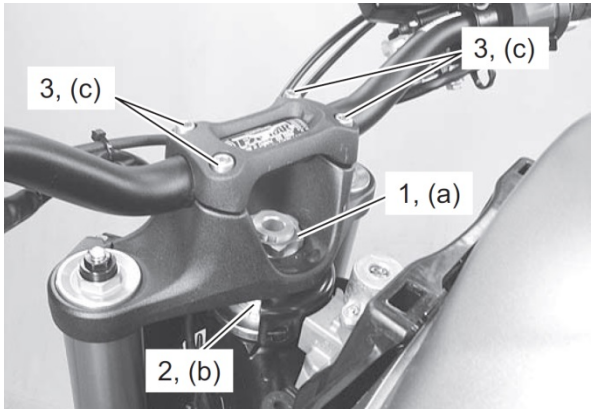

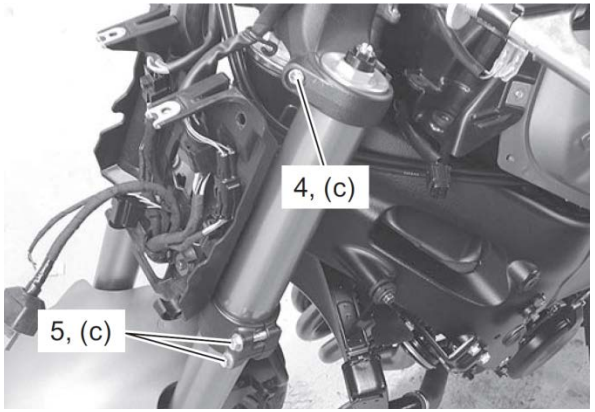

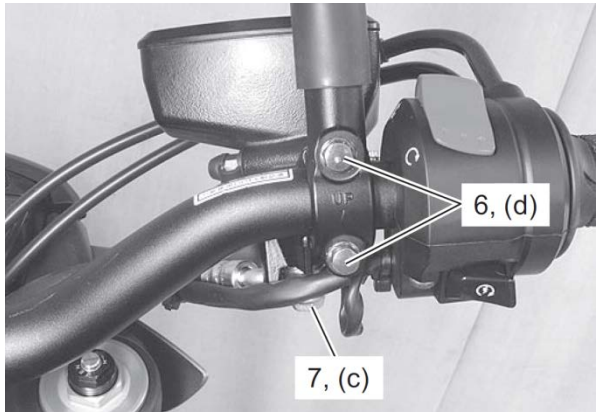

1. Steering stem head nut	(a): 90 N·m (9.2 kgf-m, 66.5 lbf-ft)
2. Steering stem lock-nut	(b): 80 N·m (8.2 kgf-m, 59.0 lbf-ft)
3. Handlebar clamp bolt	(c): 23 N·m (2.3 kgf-m, 17.0 lbf-ft)
4. Front fork upper clamp bolt	(d): 10 N·m (1.0 kgf-m, 7.5 lbf-ft)
5. Front fork lower clamp bolt	(e): 100 N·m (10.2 kgf-m, 74.0 lbf-ft)
6. Front brake master cylinder holder bolt	(f): 26 N·m (2.7 kgf-m, 19.5 lbf-ft)
7. Brake hose union bolt	(g): 18 N·m (1.8 kgf-m, 13.5 lbf-ft)

Tightening Torque for Main Parts (underside)

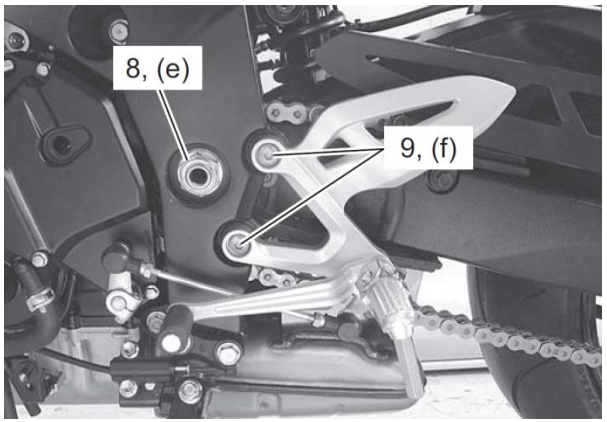

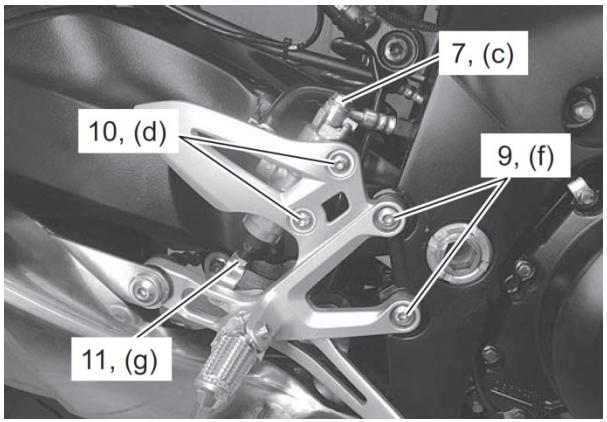

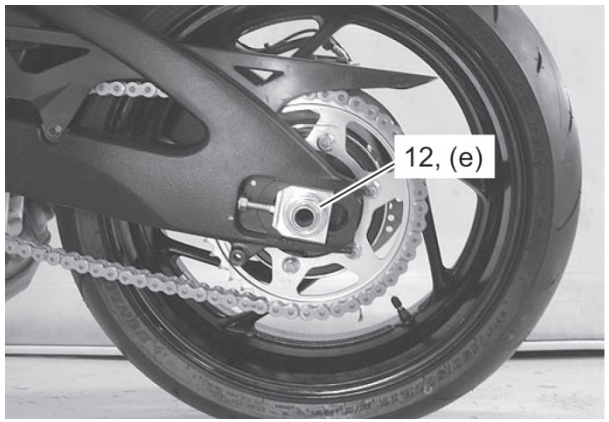

8. Swingarm pivot nut	(c): 23 N·m (2.3 kgf-m, 17.0 lbf-ft)
9. Front footrest bolt	(d): 10 N·m (1.0 kgf-m, 7.5 lbf-ft)
10. Rear brake master cylinder bolt	(e): 100 N·m (10.2 kgf-m, 74.0 lbf-ft)
11. Rear brake master cylinder rod lock-nut	(f): 26 N·m (2.7 kgf-m, 19.5 lbf-ft)
12. Rear axle nut	(g): 18 N·m (1.8 kgf-m, 13.5 lbf-ft)
(a): 90 N·m (9.2 kgf-m, 66.5 lbf-ft)	
(b): 80 N·m (8.2 kgf-m, 59.0 lbf-ft)	

FI System Component Location





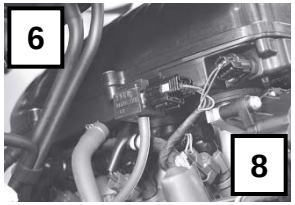

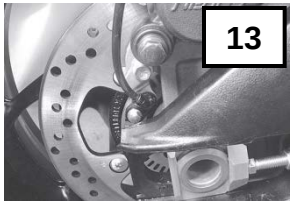

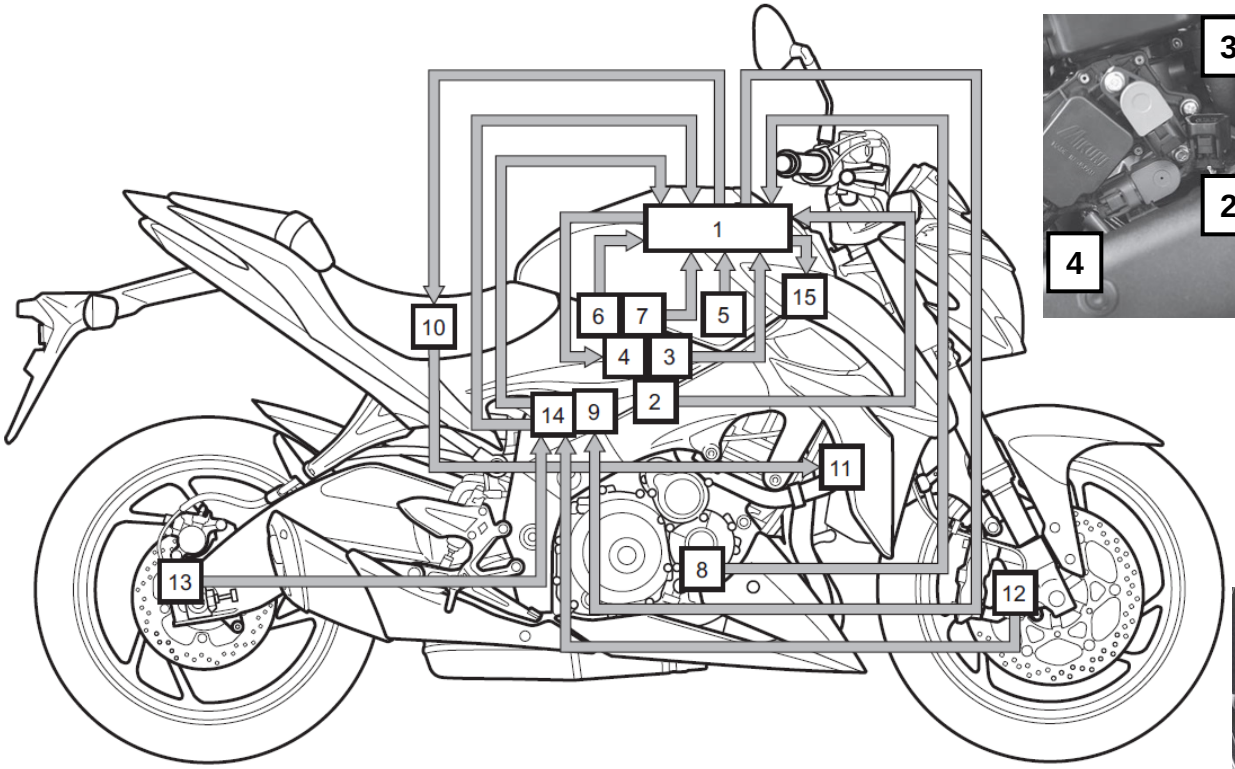

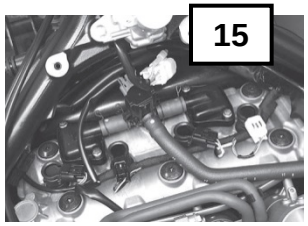

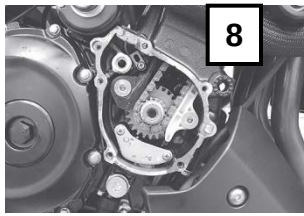

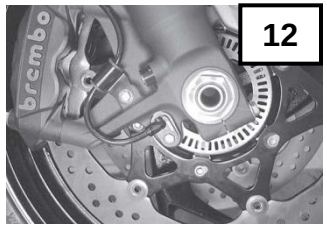

1. ECM	6. IAP sensor #2	11. Cooling fan
2. TP sensor	7. IAT sensor	12. Front wheel speed sensor
3. STP sensor	8. CKP sensor	13. Rear wheel speed sensor
4. STVA	9. EVAP system purge control solenoid valve (If equipped)	14. ABS control unit (If equipped)
5. IAP sensor #1	10 Cooling fan relay	15. PAIR control solenoid valve

FI System Component Location

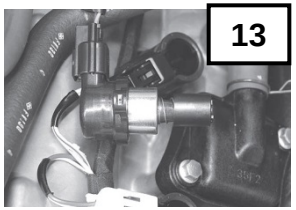

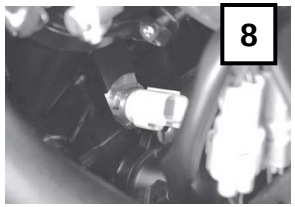

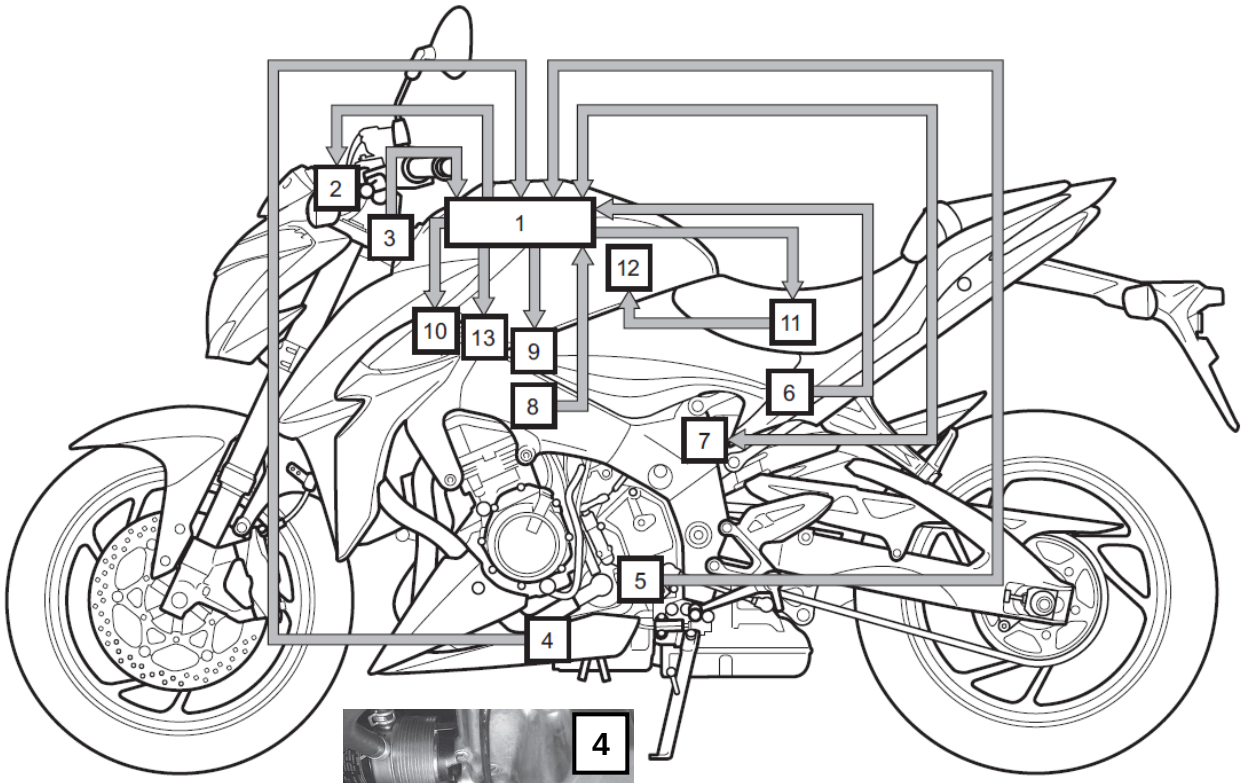

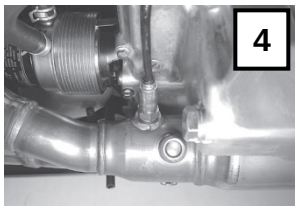



1. ECM	6. TO sensor	11. FP relay
2. Combination meter	7. EXCVA / EXCVA position sensor	12. Fuel pump
3. Ignition switch/Immobilizer (If equipped)	8. ECT sensor	13. ISC valve
4. HO2 sensor	9. Fuel injectors	
5. GP switch	10. Ignition coils	

Location of ABS self-diagnosis coupler

Coupler for mode select switch (2-terminal type, P/No. 09930–82760) to diagnose ABS is provided beside the SDS coupler under the rear seat.

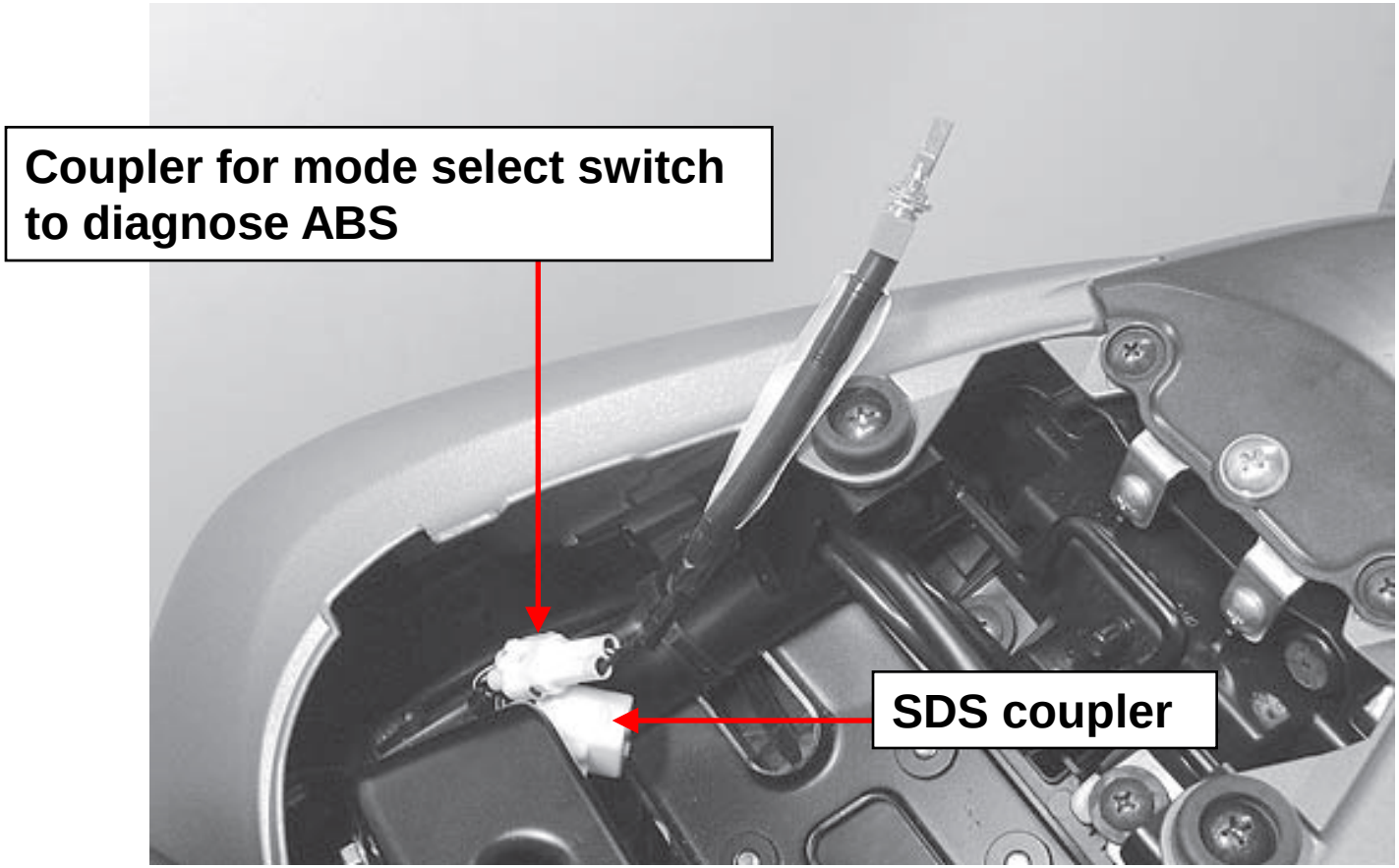

Oil and Oil Filter Change

Engine oil	Oil change	3200 ml (3.4 US qt, 2.8 Imp qt)
	With filter change	3600 ml (3.8 US qt, 3.2 Imp qt)

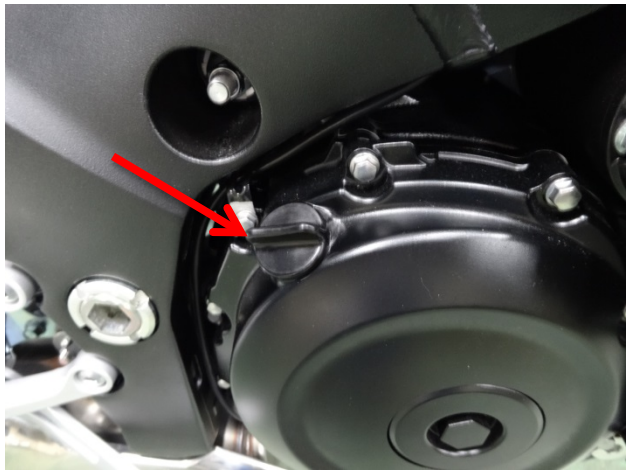

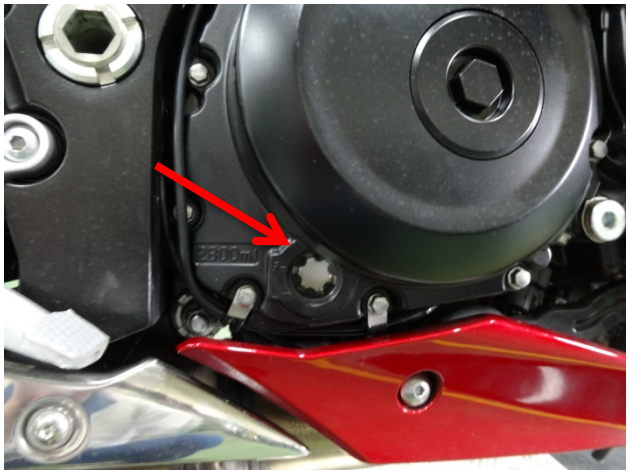



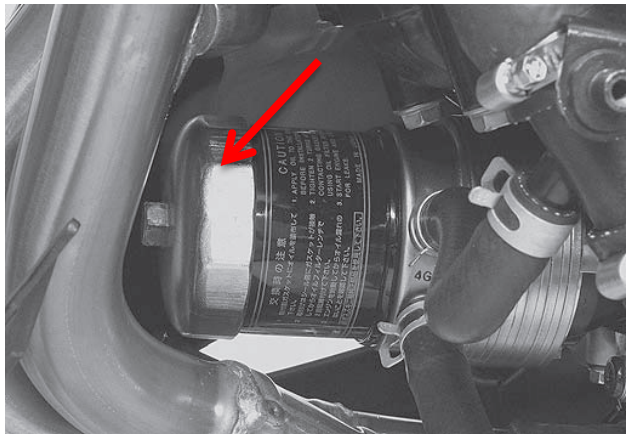



GSX-S1000A



GSX-S1000FA

Oil Cooler Removal and Installation

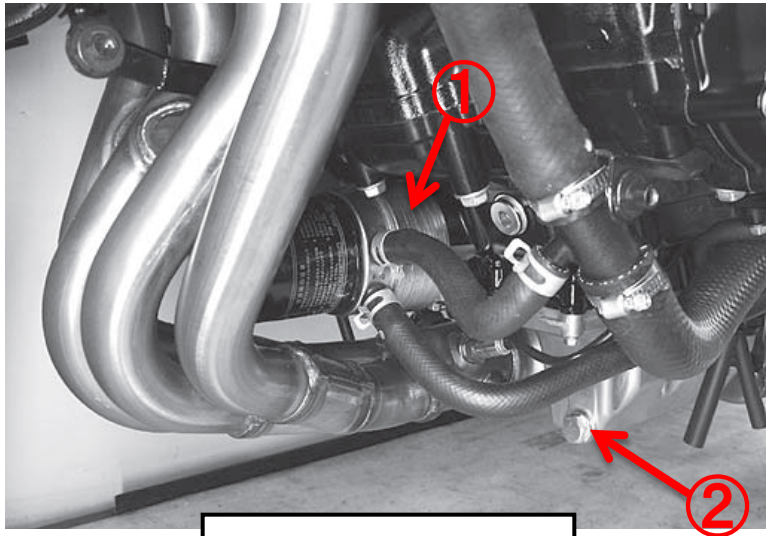

Inspection

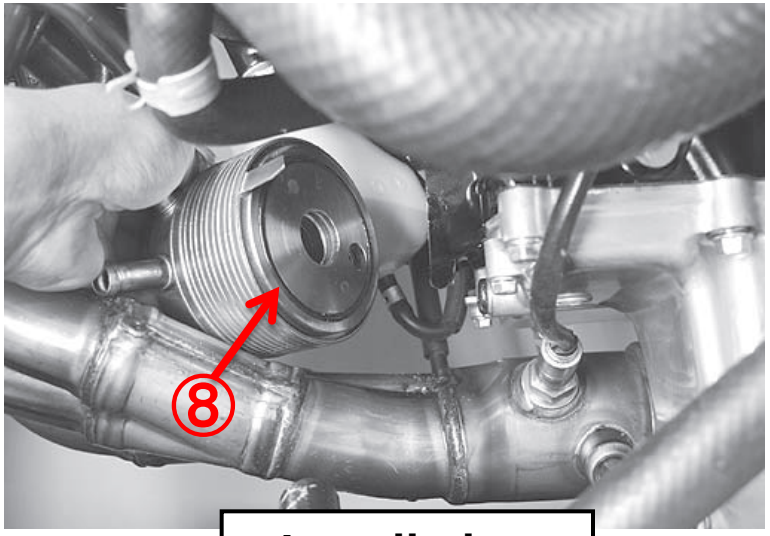

Installation

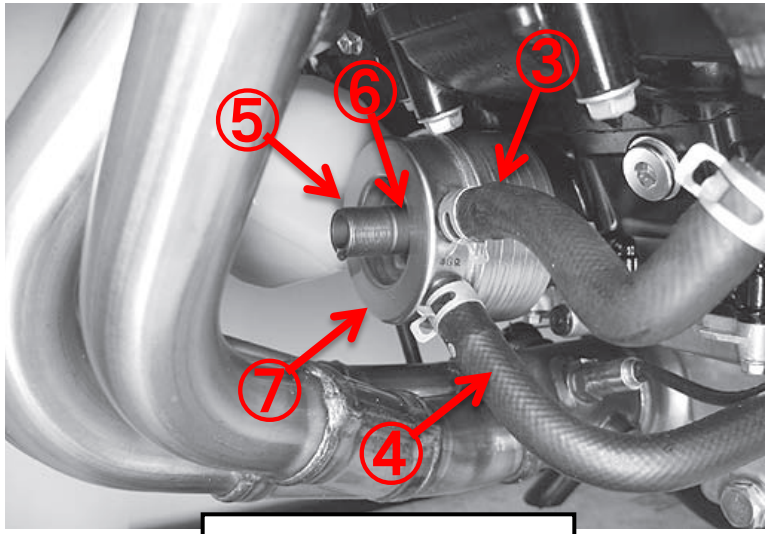

Removal

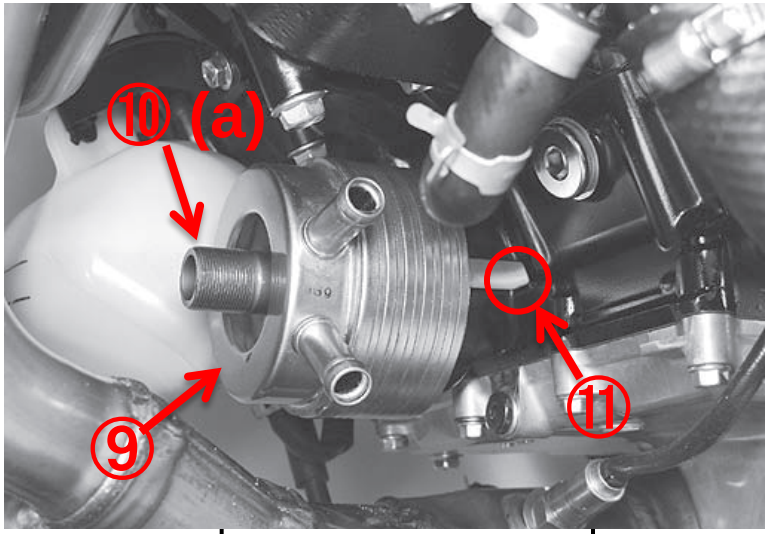

Installation

Cleaner Box and Air Element Removal

1. Remove ECM on upper cleaner box.
2. Remove bolts of cleaner box cap.
3. Remove air element.



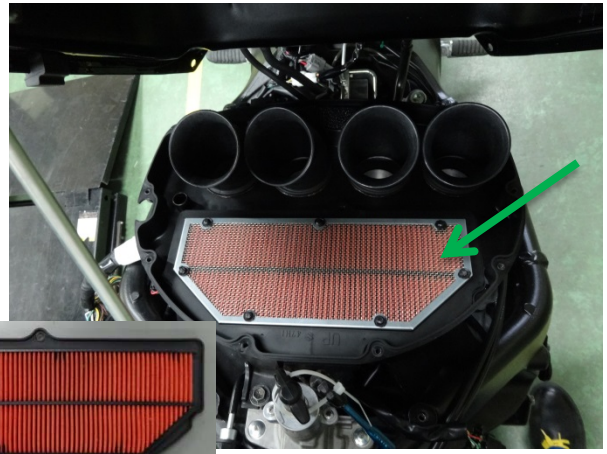

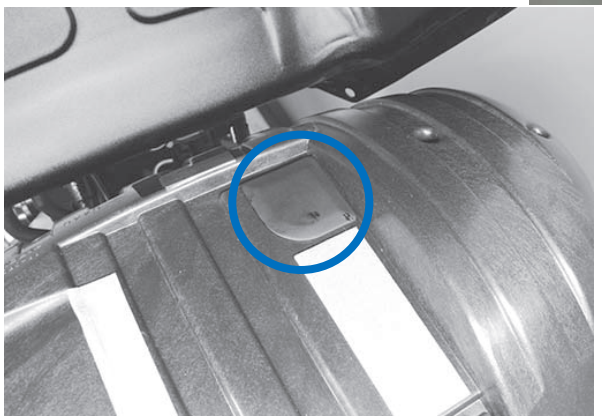





NOTE: A prop stay is available at Suzuki dealer. The prop stay part number is 44560-23H00.

WARNING
If you lift up the fuel tank when it is full, fuel can seep out from the fuel tank cap, creating a fire hazard. Reduce the fuel level to less than 1/4 full before lifting up the fuel tank. The fuel indicator on the instrument panel will blink or remain lit when the fuel level is less than 1/4 full.

Cleaner Box Removal

1. Remove front bolt.
2. Rosen throttle body fastening bands.
3. Remove hoses and couplers on the cleaner box.



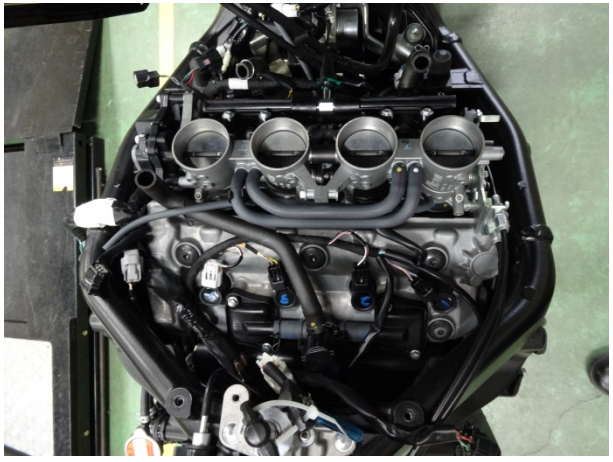

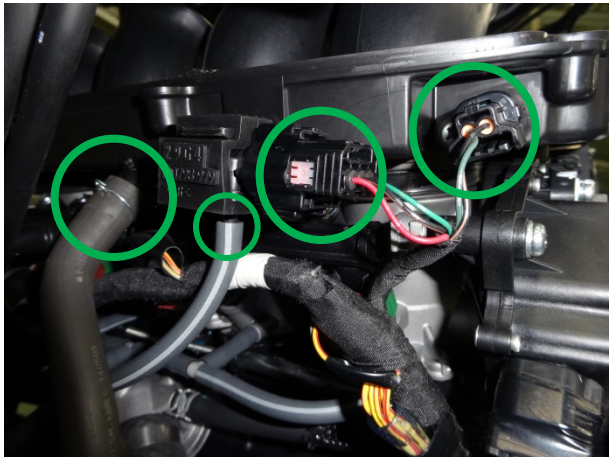
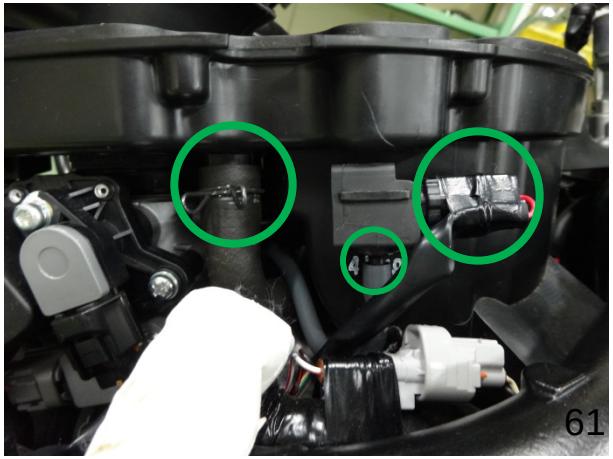

Battery Removal

1. Battery is stored under front seat.
2. The battery can be pulled out inclined angle.

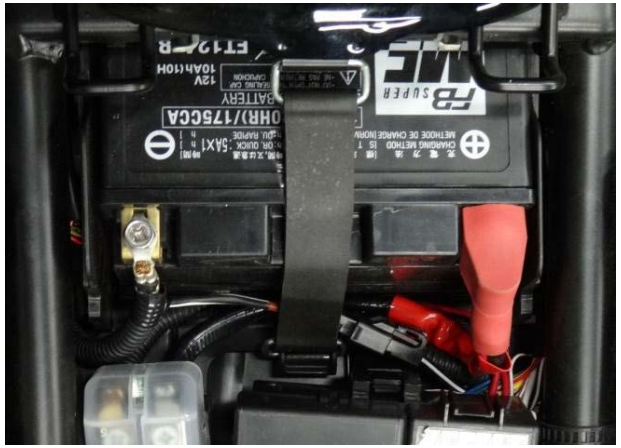





Fuel Tank Removal

SUZUKI Way of Life!

1. Remove two fastening bolts at fuel tank, front.
2. Lift up fuel tank, remove fuel pump coupler and fuel hose.
3. Remove 2 drain hoses of the fuel tank.
4. Remove rear fastening bolt at rear, lift up the fuel tank.

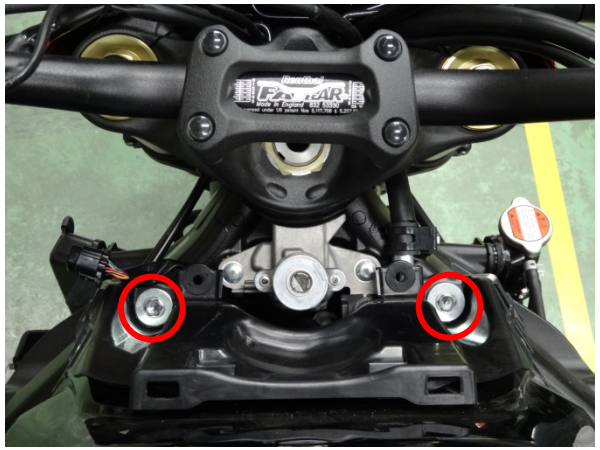

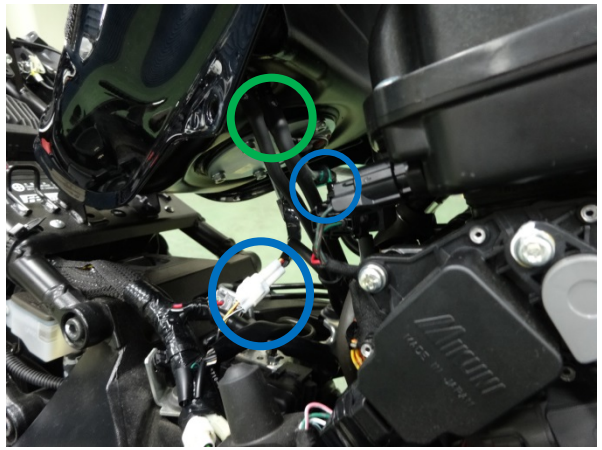



⚠ WARNING

If you lift up the fuel tank when it is full, fuel can seep out from the fuel tank cap, creating a fire hazard.

Reduce the fuel level to less than 1/4 full before lifting up the fuel tank. The fuel indicator on the instrument panel will blink or remain lit when the fuel level is less than 1/4 full.

Fuel Pump Removal

1. Remove fuel tank, remove 5 rear under fastening bolts .
2. Remove the 5 bolts, pull out fuel pump.

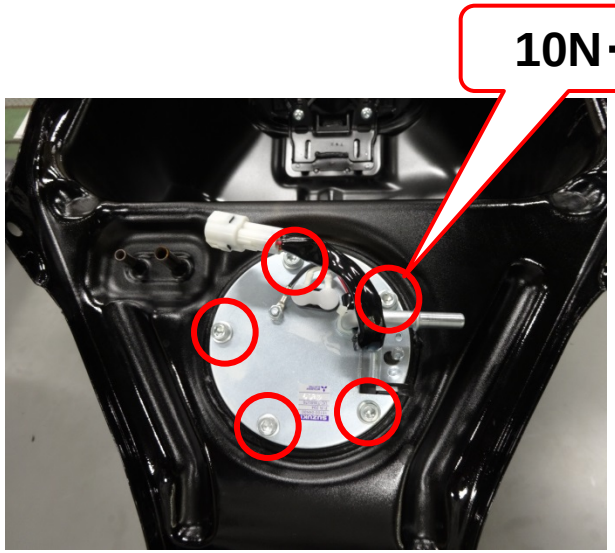





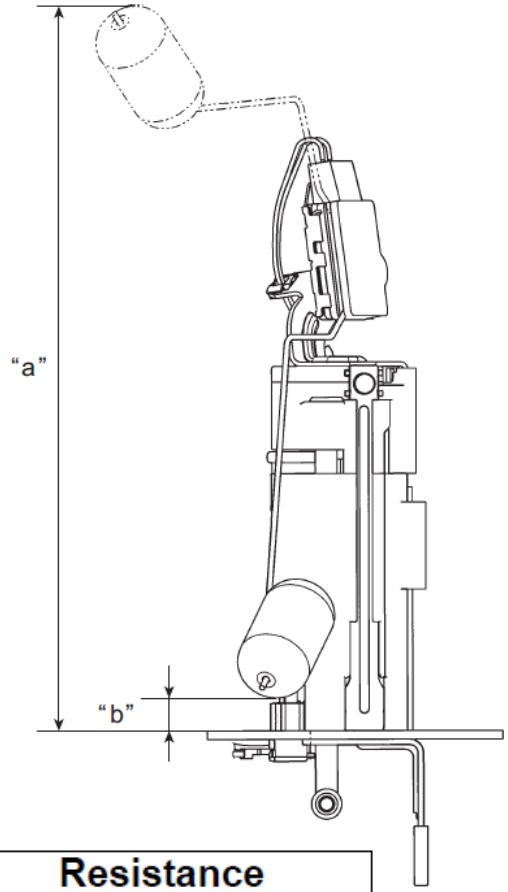

	Float position	Resistance
"a"	266.6 mm (10.50 in)	9 – 11 Ω
"b"	12.1 mm (0.48 in)	213 – 219 Ω

Fuel Pump Dismantle

1.Remove 2 attachments on Fuel Level Gauge.

2. Remove 3 bolts to Fuel Level Gauge, and pull out the level gauge.

3. Pull out main body upper cover.

4. Pull out from fuel pump folder.

5. Pull out the filter on under body, pull out the motor from upper side.

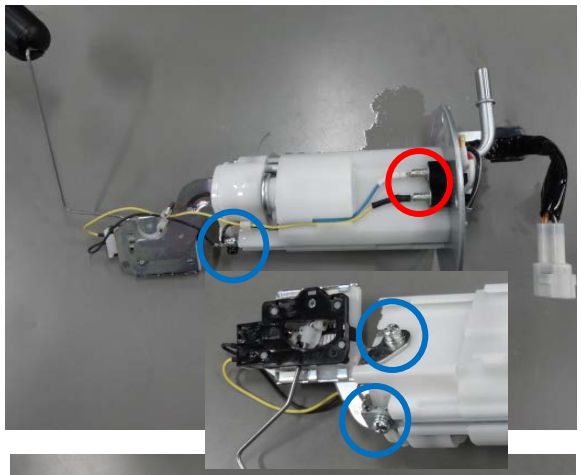

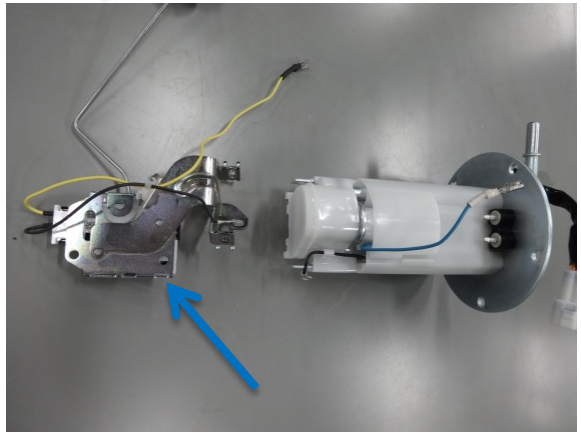

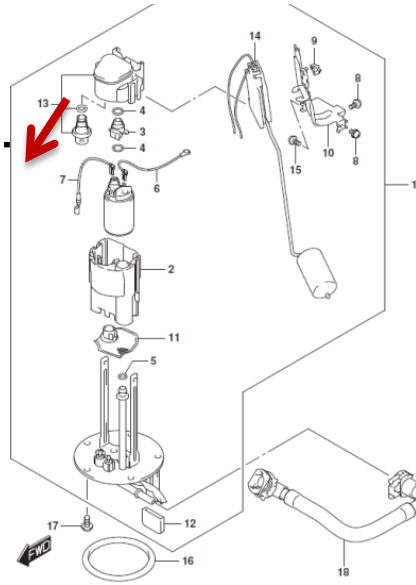

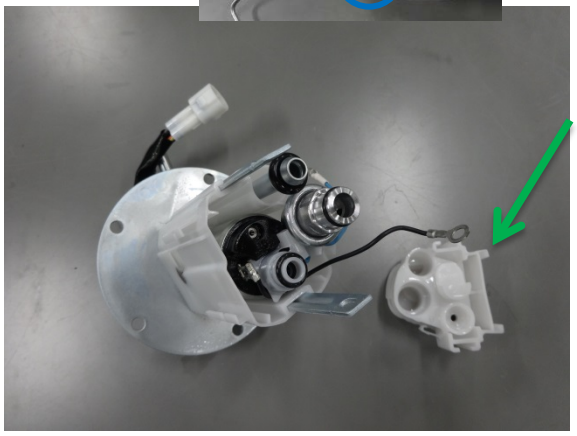



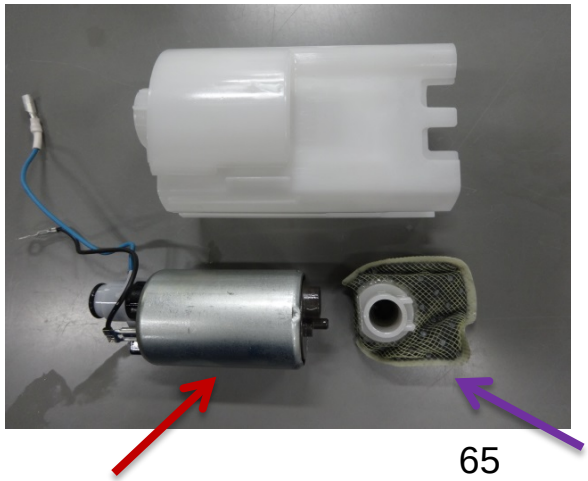

GSX-S1000A
Headlight Bulb Replacement

SUZUKI Way of Life!

1. Remove R/L two bolts of **COVER, METER.**
2. Lift up the **COVER, METER,** remove hooks.
3. Remove 2 bolts on Headlight cover upper.
4. Put down Headlight cover to front.
5. Remove Headlight cover, replace bulb.

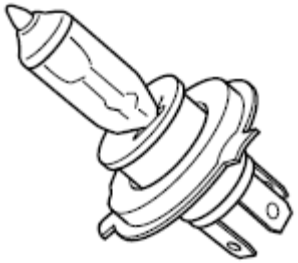



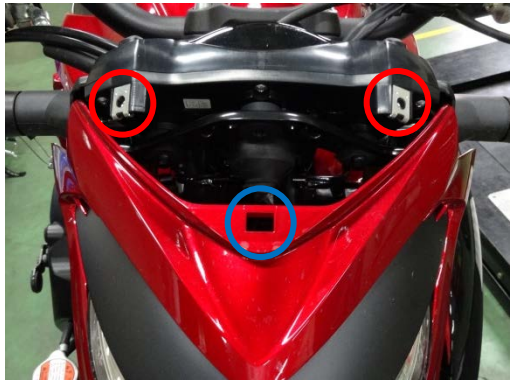





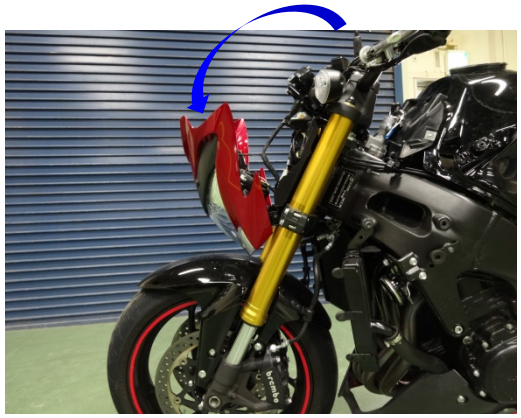

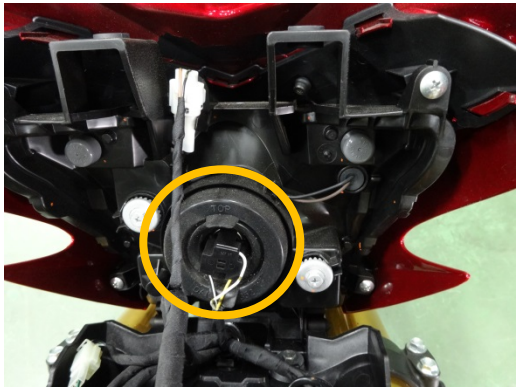

GSX-S1000A
Fuel Tank Cover Removal

SUZUKI Way of Life!

1. Remove a Fuel tank upper bolt.
2. Remove 2 fixing snaps to inside Radiator stay.
3. Remove 3 hooks at cover, rear.
4. Move the cover to front, release 2 fixing points to radiator.



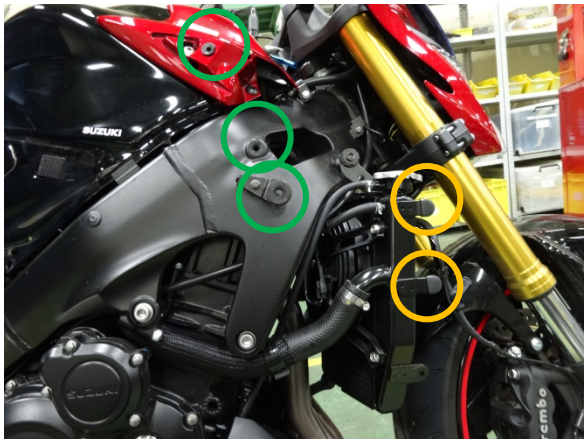



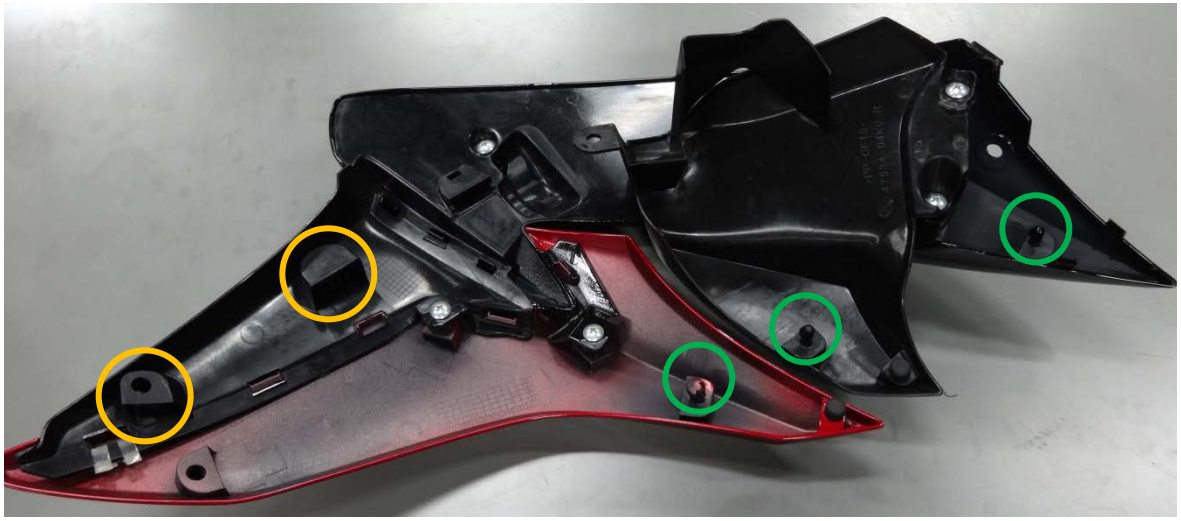



GSX-S1000A
Under Cowl Removal

SUZUKI Way of Life!

1. Remove a fastener connecting Left and Right.
2. Remove 2 bolts (L/R)
3. Remove connecting hose between Radiator and Resolver tank.

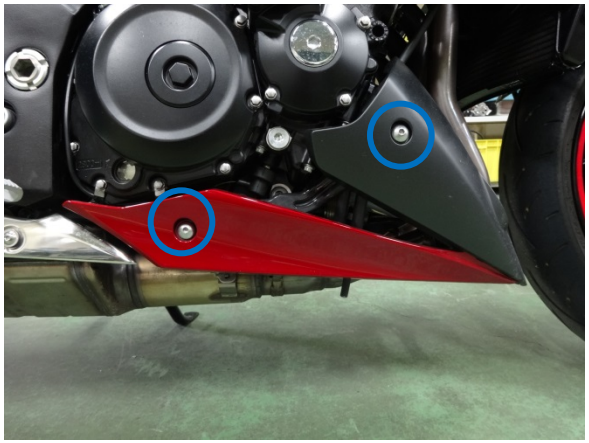
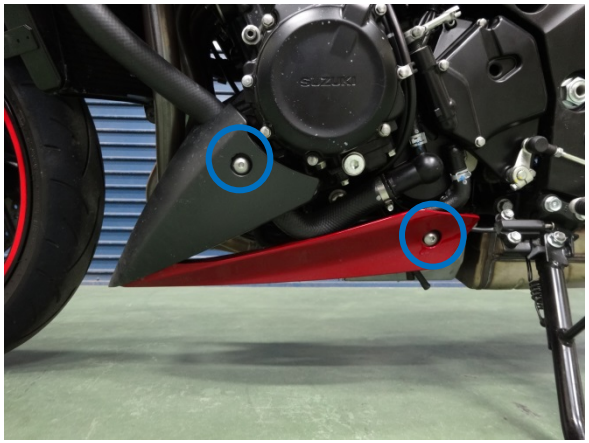

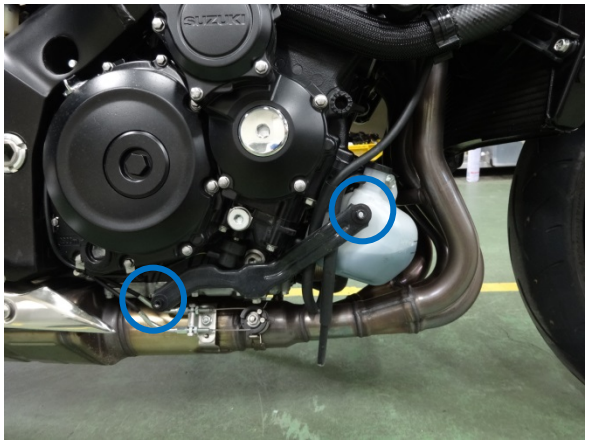
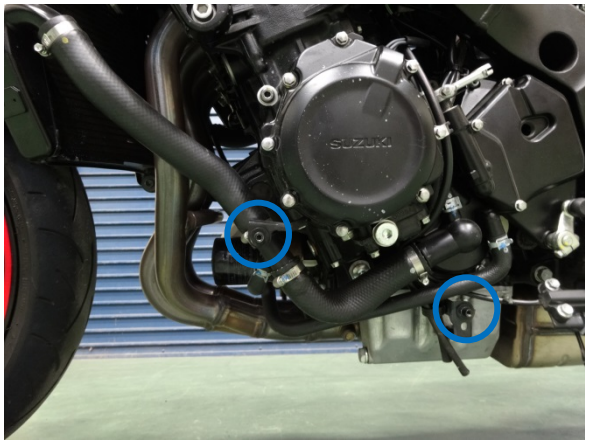
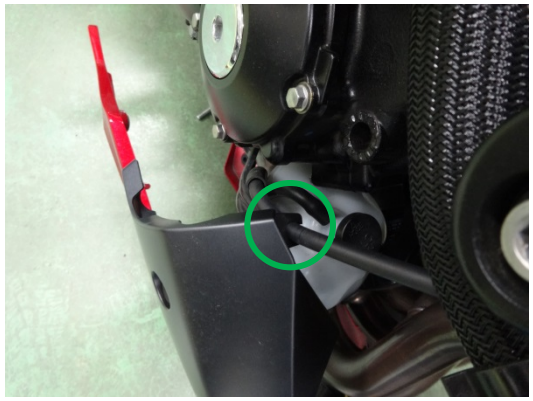

GSX-S1000FA
Side Cowl Upper Removal

SUZUKI

Way of Life!

1. Remove 2 tapping screws, front and rear.
2. Remove front inner fasteners
3. Remove 5 clipping points to side cowl, pull out to body inside direction.









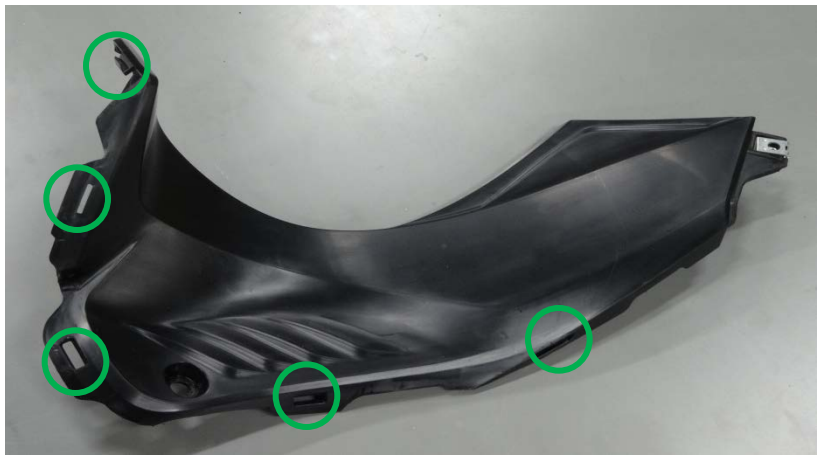



GSX-S1000FA
Side Cowl Upper fitting position

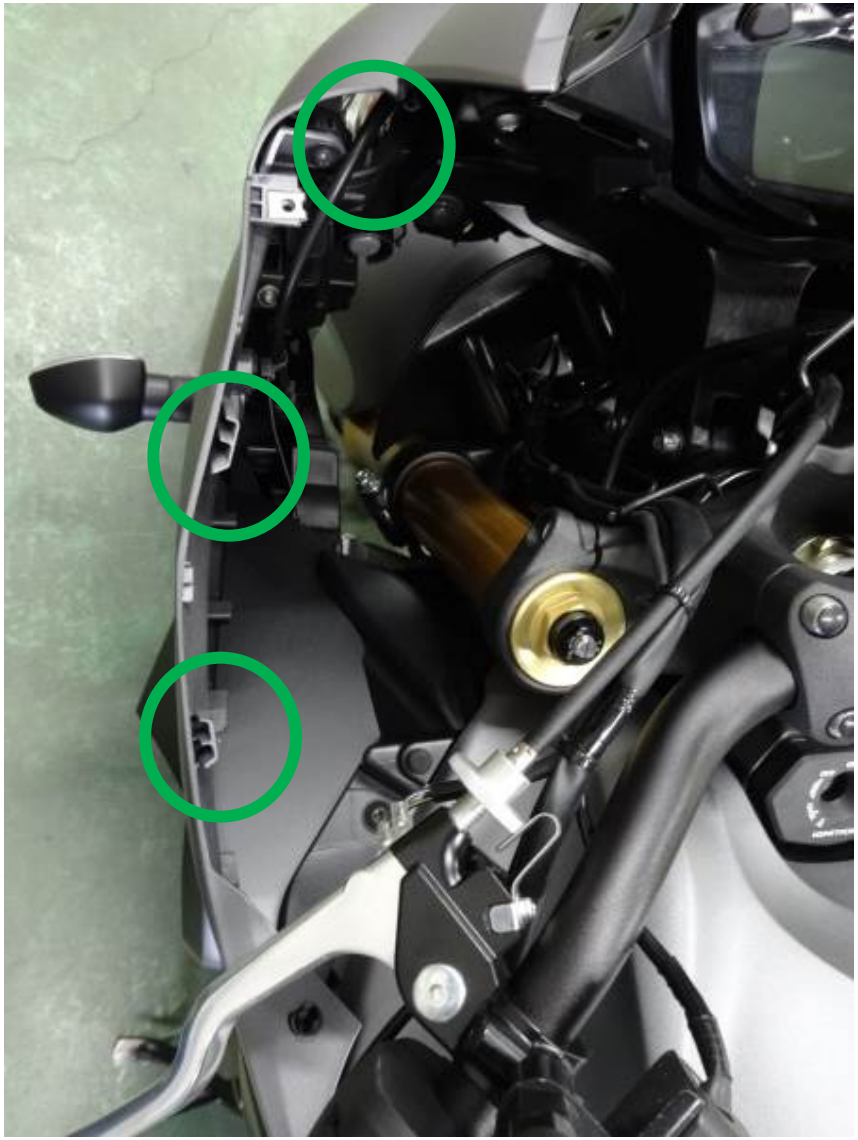



GSX-S1000FA
Side Cowl Removal

SUZUKI

Way of Life!

1. Remove cowling upper inner bolts, L/R 2 each.
2. Remove cowling under bolts, L/R 1 each
3. Release radiator front side fasteners, L/R 1 each
4. Release fastener, connecting cowling L/R
5. Release couplers of harness coupler to Head Light and Turn signal lamps
6. Release cowling rear hook, hook to radiator and front velcro

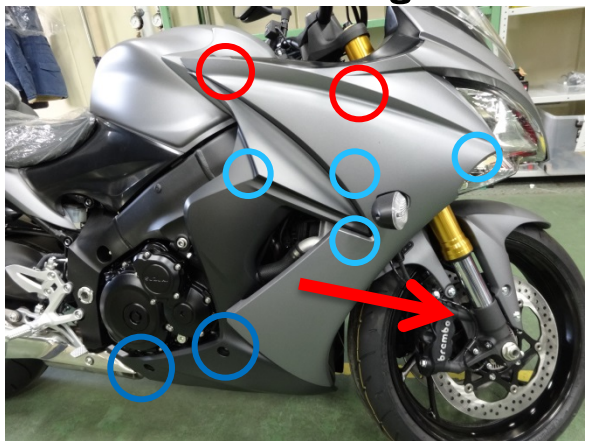

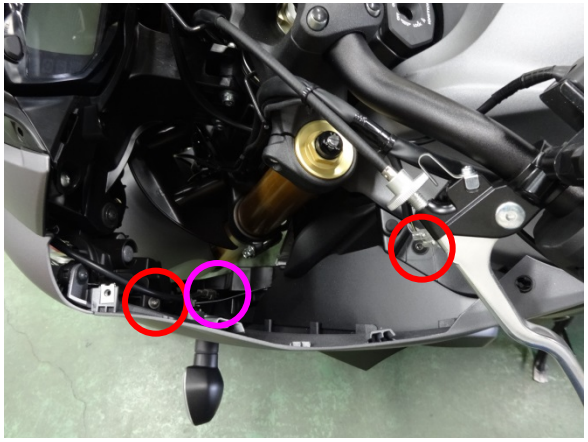



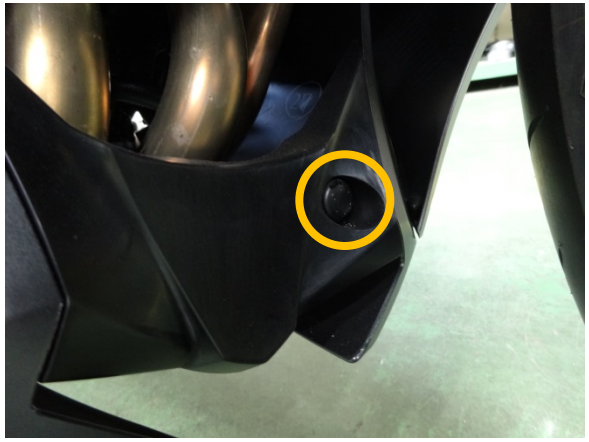

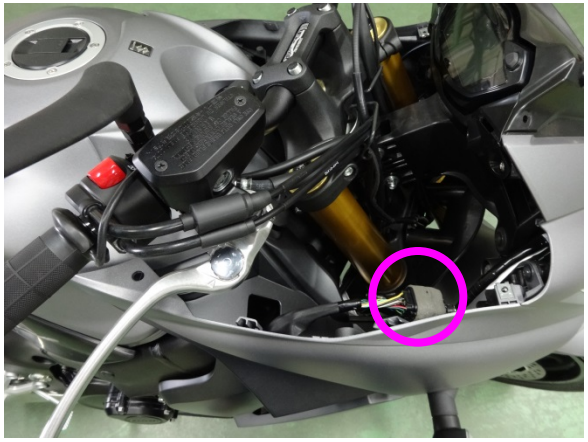



GSX-S1000FA
Side Cowling install

Fit in Radiator side projections into cowling inside pockets.

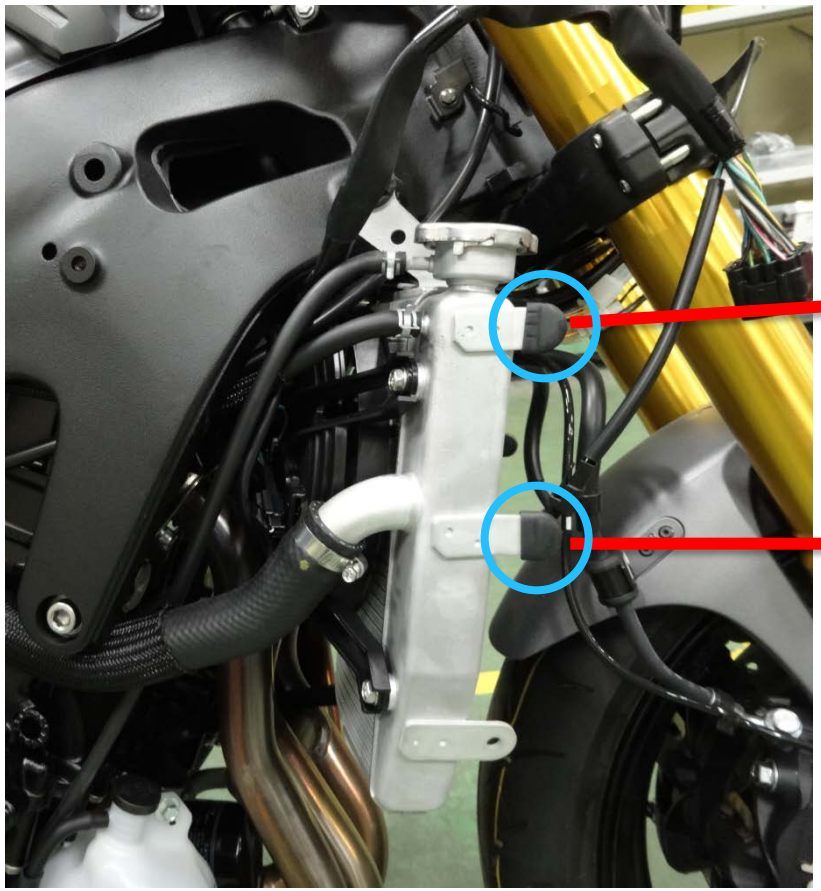

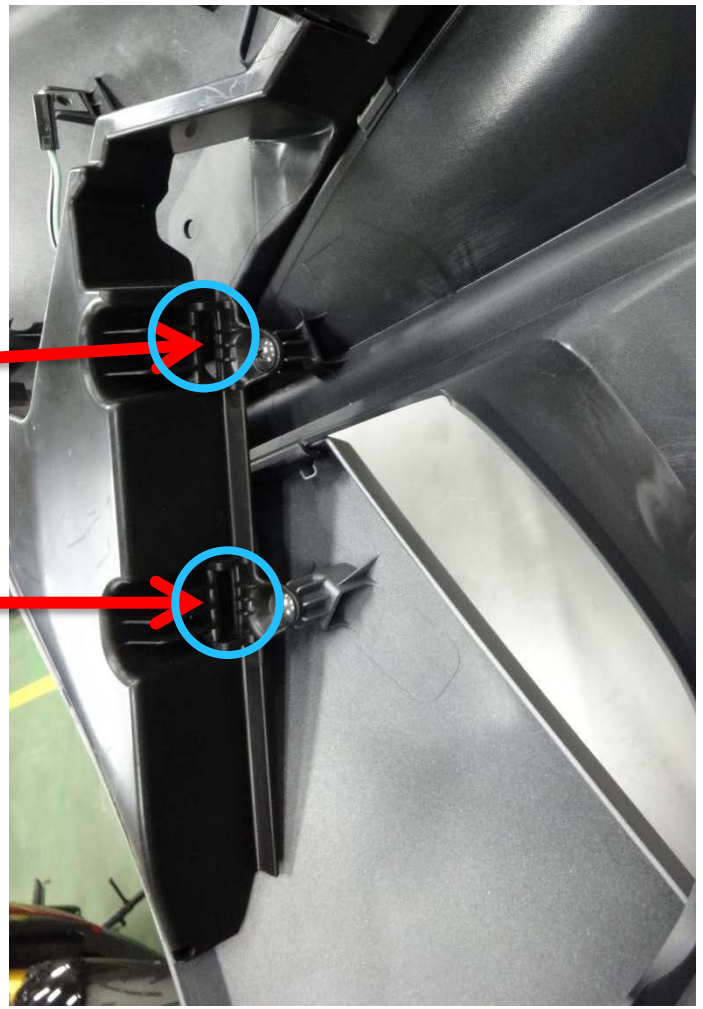

GSX-S1000FA
Meter Panel Removal

SUZUKI

Way of Life!

1. Remove 2 fasteners on R/L upper.
2. Remove 2 bolts on R/L under.
3. Lift up Headlight combination, release center hook, remove the coupler from harness.

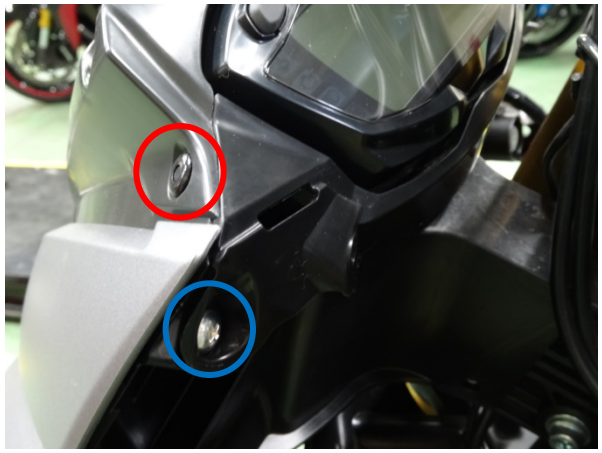









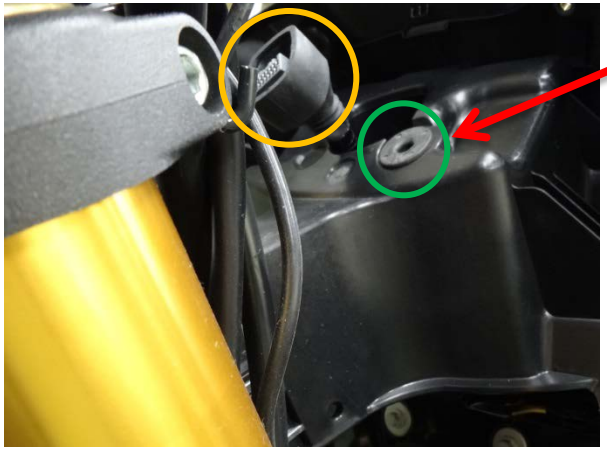



GSX-S1000FA
Headlight Combination Removal

SUZUKI Way of Life!

1. Remove 2 bolts, R and L each.
2. Lifting up the Headlight combination, remove center hook.



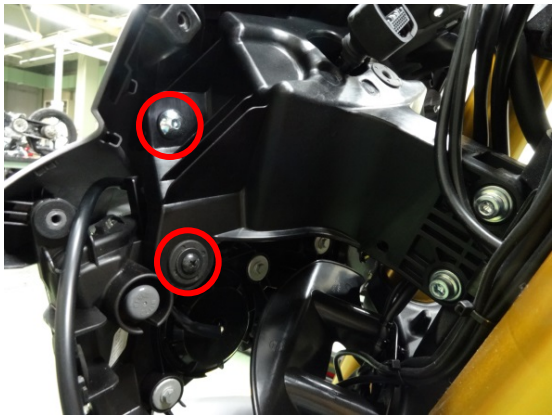

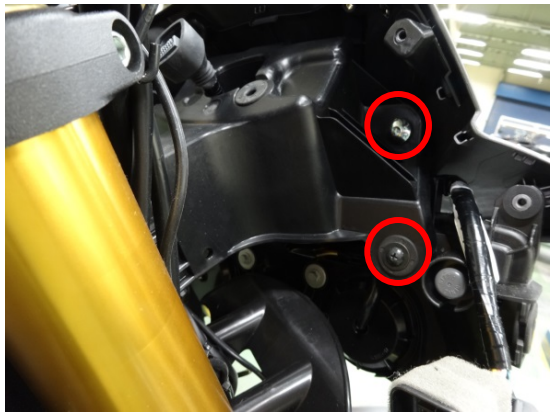

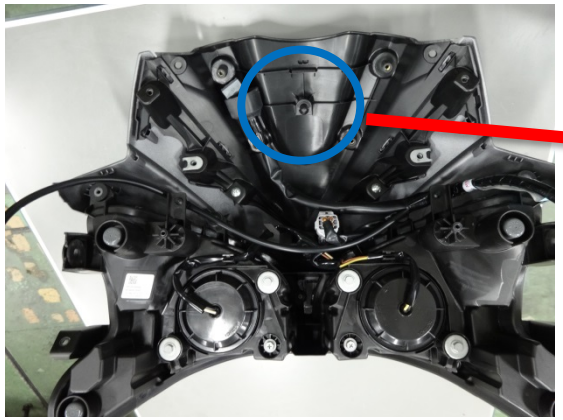

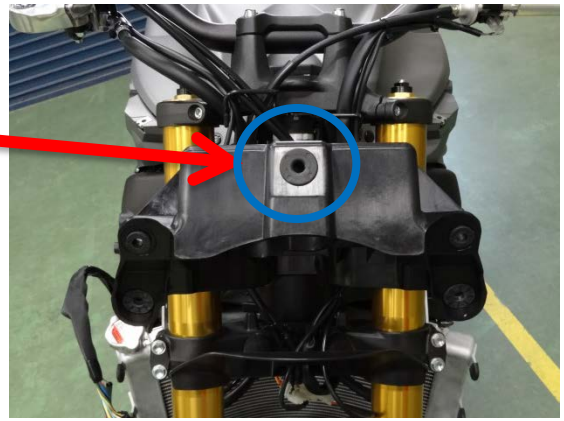

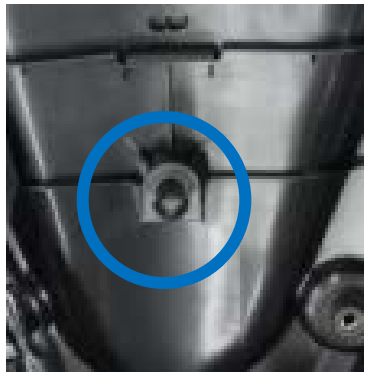

GSX-S1000FA
Headlight Bulb Replacement

SUZUKI

Way of Life!

Remove Headlight bulb from the Headlight combination.

1. Turn and remove water sealing bulb, rear the Headlight bulb.
2. Replace the Headlight bulb.
3. Attach water sealing cap, rotating → direction, to the △ mark.

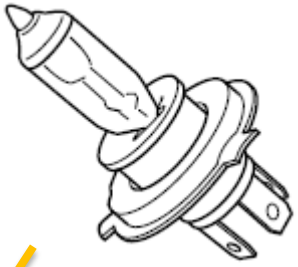

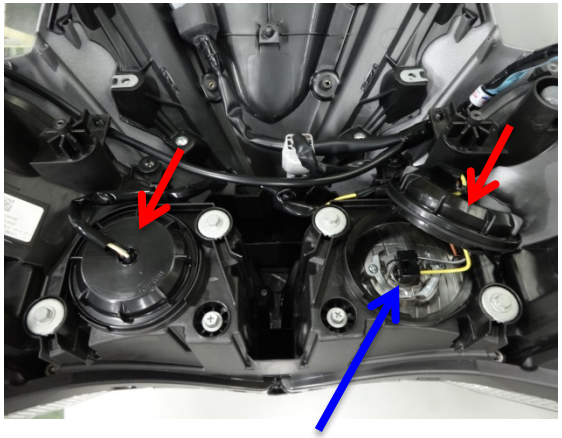

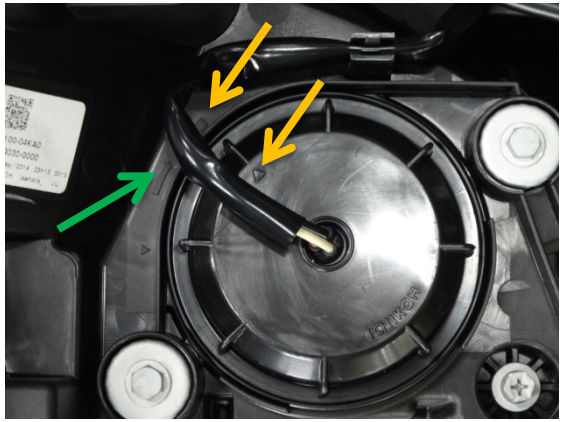

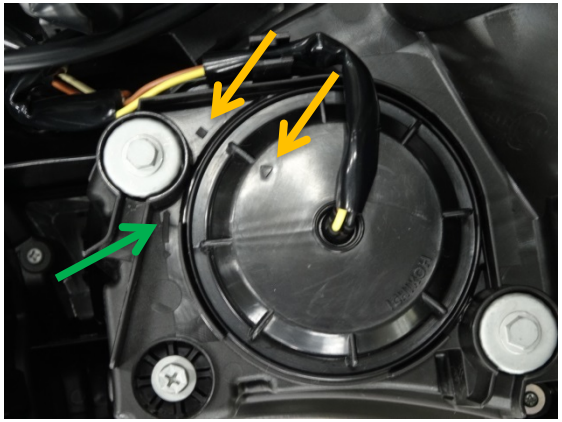

Fuel Tank Front Cover Removal

SUZUKI Way of Life!

1. Remove 2 bolts and fasteners, R/L each.
2. Lifting up the cover, remove 2 clipping points.

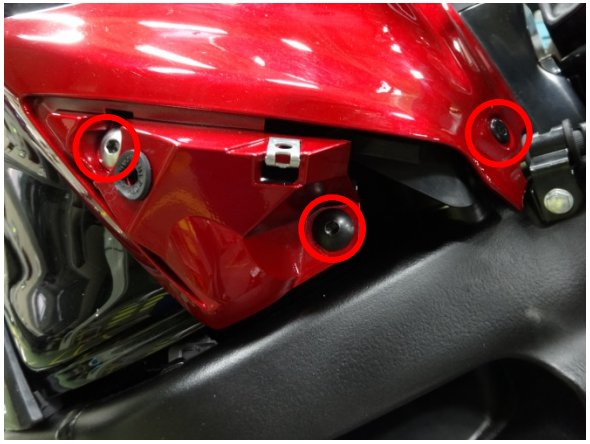







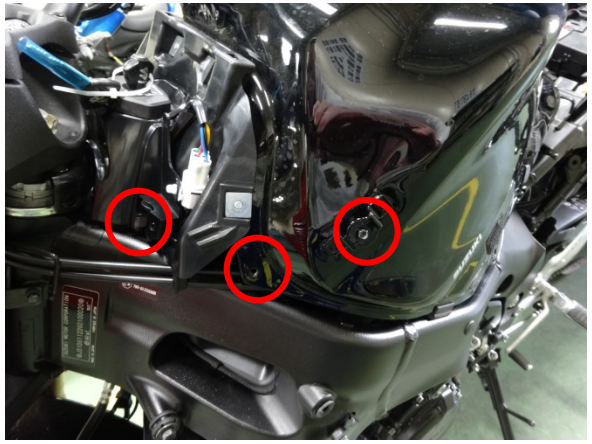

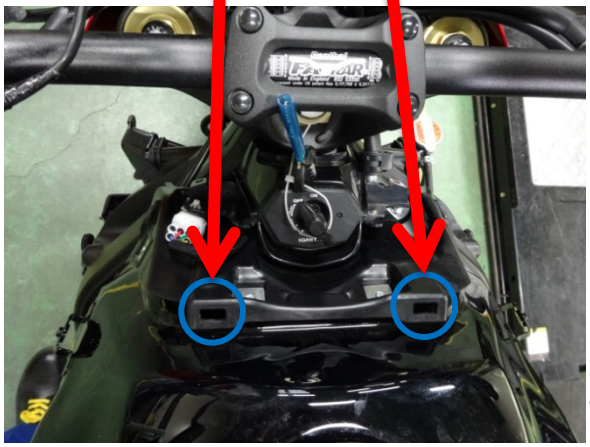

Immobilizer Removal

1. Remove Coupler.
2. Release 2 fixing points under the Immobilizer holder, remove to upper side.

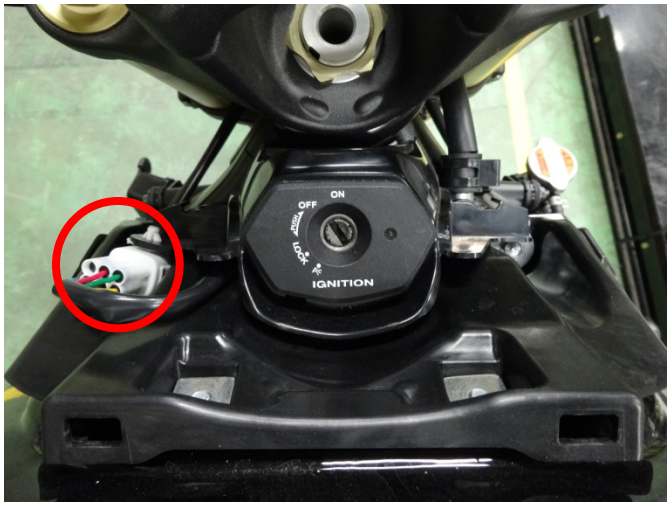



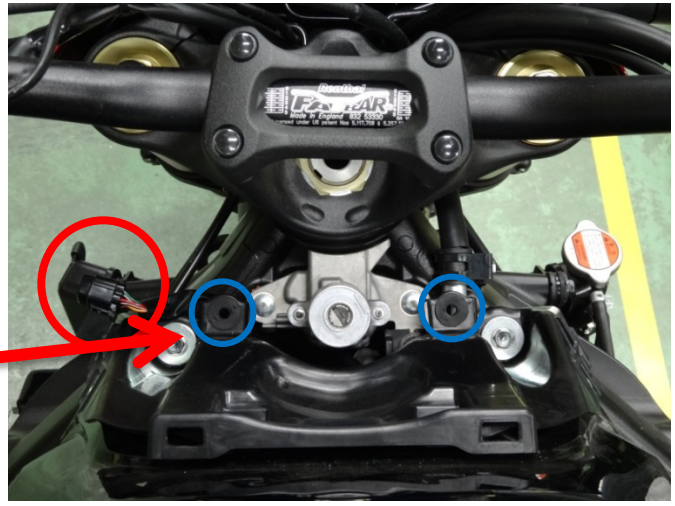

Frame Cover Removal

1. Lift up from the cover under and rear parts, release 2 hooks, ○ lift up upper and front side to release 2 Velcro tapes. ○
2. Move the cover to rear, release 2 hooks and remove the cover. ○

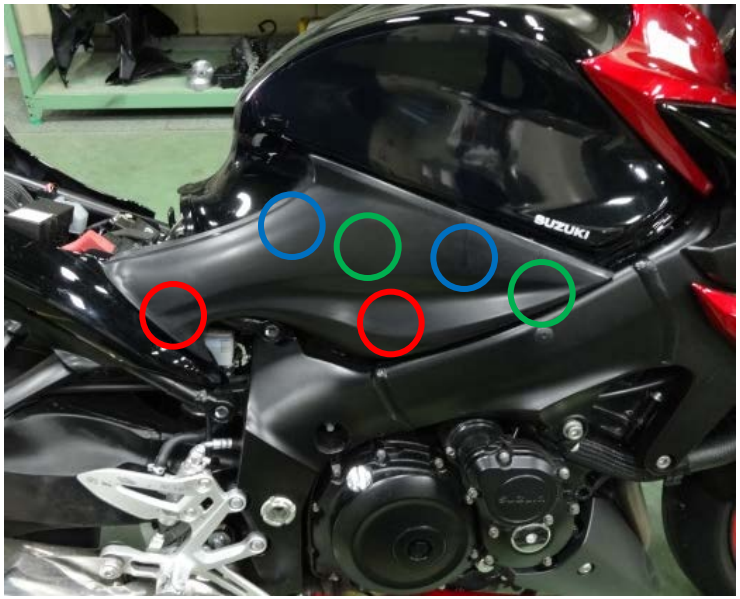

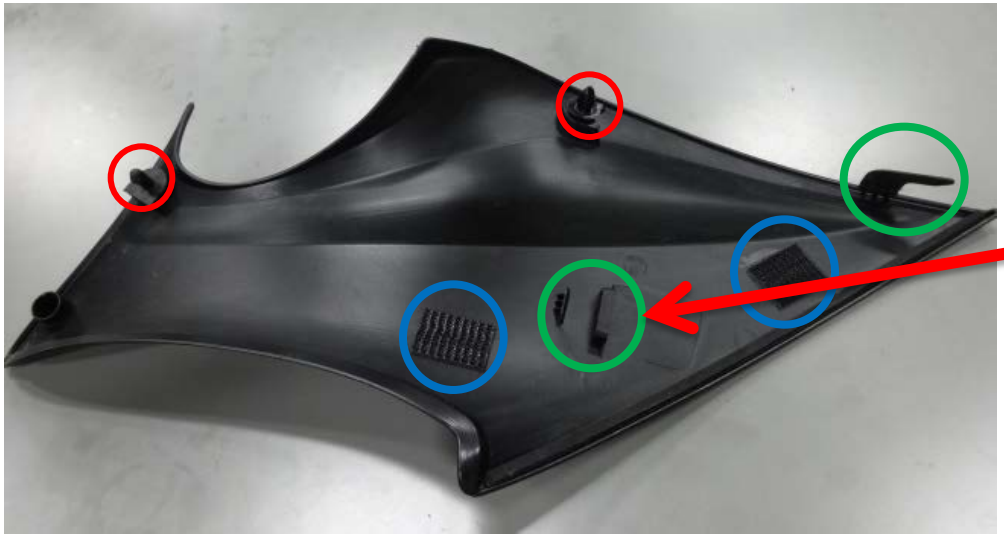

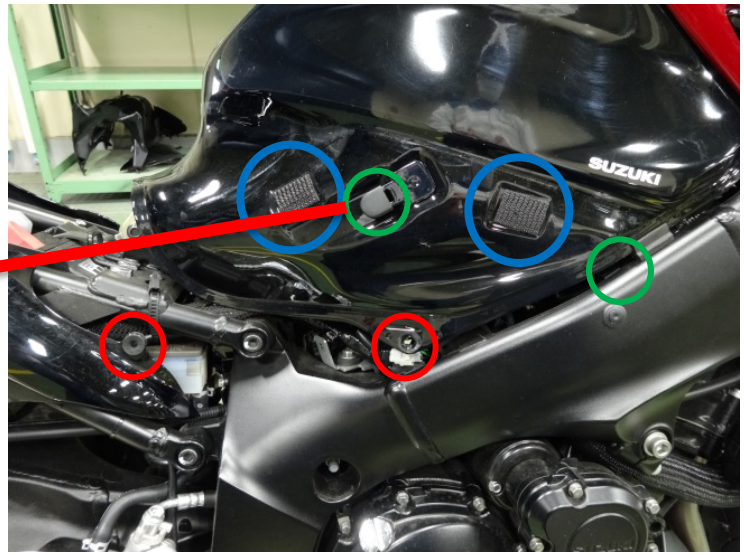

Tail Cowl Removal

1. From upper side, remove 2 bolts R/L, 2 tapping screws and a bolt, rear, center.
2. Remove 2 tapping screws, R/L each.
3. Release side clipping points, 4 each for R/L.

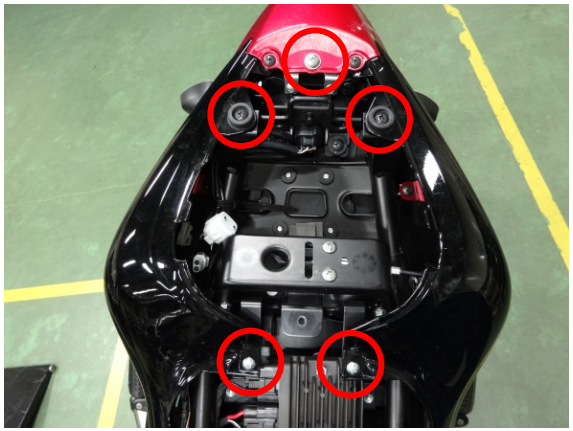

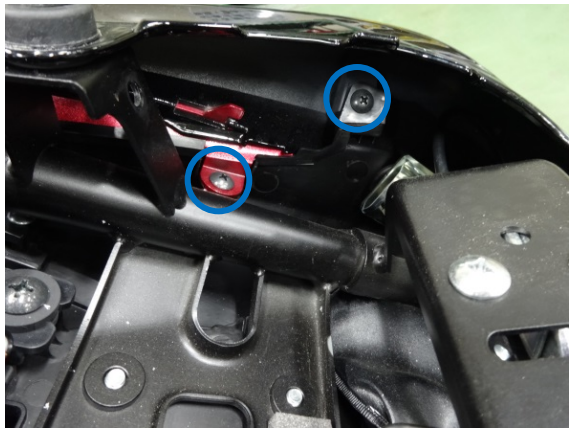
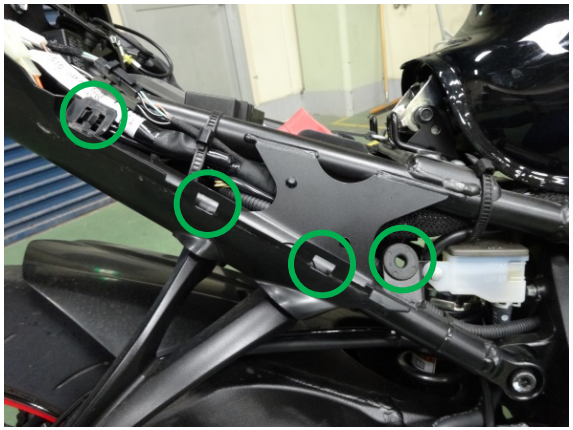



Tale Cowl fitting points





Specifications 1 of 2

SUZUKI

Way of Life!

SPEC \ MODEL	GSX-S1000/AL6 GSX-S1000F/FAL6
Overall length	2115mm (83.3in)
Oveall width	795mm (31.3in)
Oveall height	GSX-S1000/A:1080mm (42.5in) GSX-S1000F/FA:1180mm (46.5in)
Wheelbase	1460mm (57.5in)
Ground clearance	140mm (5.5in)
Seat height	810mm (31.9in)
Curb mass (GSX-S1000)	207kg (456 lbs) <208kg for E33>
Curb mass (GSX-S1000A)	209kg (461 lbs) <210kg for E33>
Curb mass (GSX-S1000F)	212kg (467 lbs) <213kg for E33>
Curb mass (GSX-S1000FA)	214kg (472 lbs) <214kg for E33>
Engine type	4-stroke 4-cylinder liquid-cooled DOHC
bore x stroke	73.4mm x 59.0mm (2.9in x 2.3in)
Displacement	999cm3 (61.0cu.in)
Compression ratio	12.2:1

Specifications 2 of 2

Fuel system	fuel injection
Starter system	electric
Lubrication system	wet sump
Transmission	6-speed constant mesh
Primary reduction ratio	1.553 (73/47)
Final reduction ratio	2.588 (44/17)
Suspention front	inverted telescopic, coil spring, oil damped
Suspention rear	link type, coil spring, oil damped
Rake/trail	25°/ 100mm (3.9in)
Brakes front	disc, twin
Brakes rear	disc
Tyres front	120/70ZR17M/C (58W), tubeless
Tyres rear	190/50ZR17M/C (73W), tubeless
Iginition system	electric iginition (transistorized)
Fuel tank	17L (4.5/3.7 US/Imp gal)
Oil capacity	3.4 L (3.6/3.0 US/Imp qt)
Max torque(N·m/rpm)	106N·m/9500rpm
Max power(kW/rpm)	107kw/10000rpm <106kw/9500rpm for E33>

DTC Check Position

- Special tool : mode select switch
- (A): 09930–82720（Current 6 pin type）



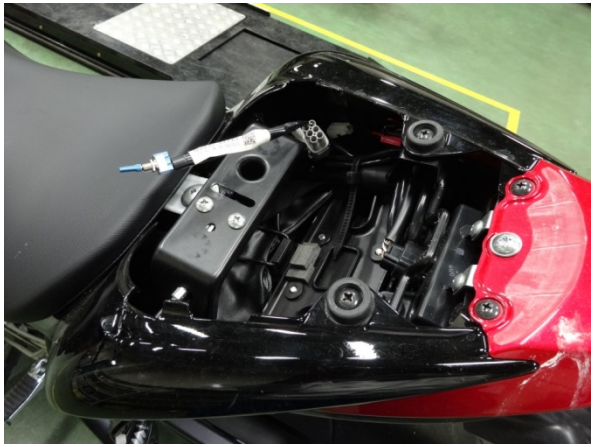



DTC Indication

SDS Software Ver.37

Applicable SDS software is Ver. 37 release in January 2015.

Part No.: 99565–01010–037
(CD-ROM Ver.37)

Special Tool

No new special tool for GSX-S1000A / FA.

END